(No Model.)

H. MAGER.

DEVICE FOR THE AUTOMATIC ROTATION OF TOOLS.

No. 456,152. Patented July 21, 1891.

Fig. 1.

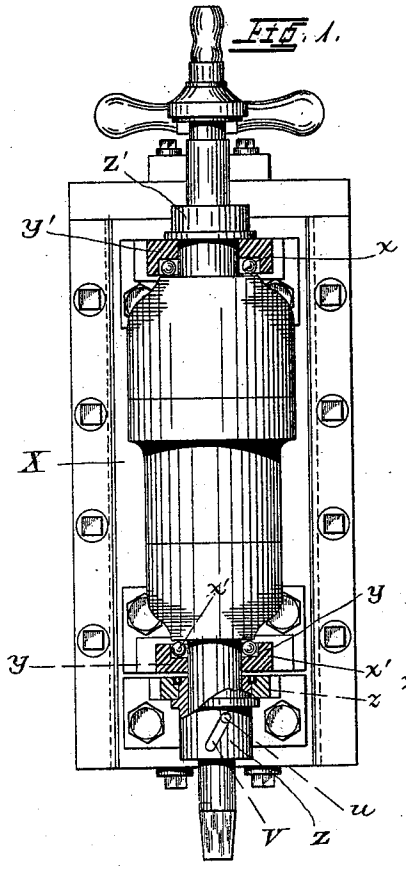

Fig. 2.

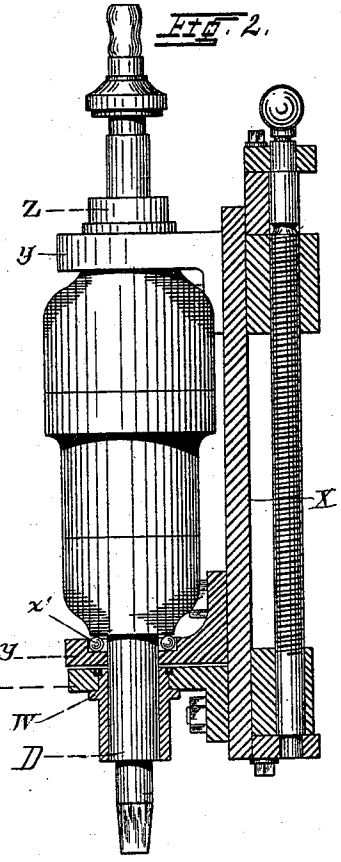

Fig. 3.

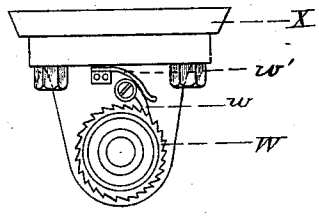

Witnesses:
E. B. Bolton
E. K. Stuntevant.

Inventor:
Heinrich Mager
By Richards & Co
his Attorneys.

THE NORRIS PETERS CO., PHOTO-LITHO., WASHINGTON, D. C.

UNITED STATES PATENT OFFICE.

HEINRICH MAGER, OF BERLIN, GERMANY.

DEVICE FOR THE AUTOMATIC ROTATION OF TOOLS.

SPECIFICATION forming part of Letters Patent No. 456,152, dated July 21, 1891.

Application filed February 12, 1891. Serial No. 381,238. (No model.)

To all whom it may concern:

Be it known that I, HEINRICH MAGER, a subject of the King of Prussia, German Empire, residing at Berlin, Germany, have invented certain new and useful Improvements in Devices for the Automatic Rotation of Tools, of which the following is a specification.

The object of my present invention is to provide an arrangement whereby vertically-movable tools are given a rotary movement, so that the same may be used for making round holes. The tool and the means for imparting the vertical movement thereto may be of the usual or any preferred kind; but the invention is, however, most advantageously connected with the pneumatic tool apparatus hereinafter described.

In order to make my invention more clearly understood, I have shown in the accompanying drawings means for carrying the same into practical effect.

Referring to said drawings, Figure 1 is a view, partly in section, of a tool apparatus embodying my invention. Fig. 2 is a similar view taken at right angles to Fig. 1, and Fig. 3 is a bottom view.

In said drawings, X represents the ground plate. In said plate are tightly screwed the two eyes x x', in which the neck part y y' of the pneumatic tool-holder rest in ball bearings Y. Over the neck part y of the tool-holder the sleeve Z is shoved. This sleeve Z is adapted to rotate around this neck and in the eye z, which is screwed on the ground plate X, and which also bears a ratchet-wheel W, in which the pawl w engages under pressure of a spring w'. This pawl w has its stationary rotating point in the eye z of the bearing, so that the sleeve Z can only turn in the one direction. A slanting slot V is provided in sleeve Z, through which the peg u passes, which is fastened to the straight-led tool-rod D. A similar sleeve Z' is also arranged on the upper neck part y' of the holder.

When the tool-rod is held up, the pawl w rests tightly in the ratchet W, and sleeve Z is held fast. When the tool-rod D goes down, the slanting surface of the slot V opposes itself to its straight downward movement. The peg u must, therefore, slide down in the slanting slot and turns the rod which strikes the object being worked with a boring movement. When the tool-rod D goes up, the catch u again strikes against the upper slanting surface of the slot V and strives to turn the sleeve W. As the direction of the rotation is the same as the ratchet-tooth w, this latter does not oppose itself to this rotation, and the wheel W is turned while the tool-holder retains its position. In the following downward movement of the tool-holder the peg u strives to turn the sleeve in the opposite direction, which, as has been already described, is avoided by the pawl w, so that when sleeve W is held fast a further rotation of the tool-holder with the tool is caused.

In each downward movement of the tool-holder a slight rotation is caused, so that the tool is caused to gradually complete a full rotation, and thus intermittently makes a round hole in the object to be worked.

In the above-mentioned operations the tool struck the object while rotating. If, however, the boring is to be done by straight alternating strokes, it will only be necessary to reverse the arrangement of the ratchet and pawl, so that now the rotation of the tool-holder is made when going up, the turning of the sleeve W, however, when coming down.

As is evident from the foregoing description, it is entirely immaterial what actuating means are used.

I claim—

1. In a tool apparatus, the combination, with a vertically-moving tool, of means for transmuting the vertical into a rotary motion, substantially as and for the purpose specified.

2. In a tool apparatus, the combination, with a vertically-moving tool, of means for imparting a rotary motion thereto, consisting of a sleeve provided with a slanting slot, the tool-rod D, with said sleeve, and a peg on the tool-rod, projecting into the slot, as and for the purpose specified.

In witness whereof I have hereunto set my hand in presence of two witnesses.

HEINRICH MAGER.

Witnesses:

M. A. WALSH,

CHRISTIAN FRISCH.