No. 633,881. Patented Sept. 26, 1899.

C. C. DE MOCOMBLE.

FRICTION DRIVING MECHANISM.

(Application filed July 8, 1899.)

(No Model.) 2 Sheets—Sheet 1.

Fig. 1.

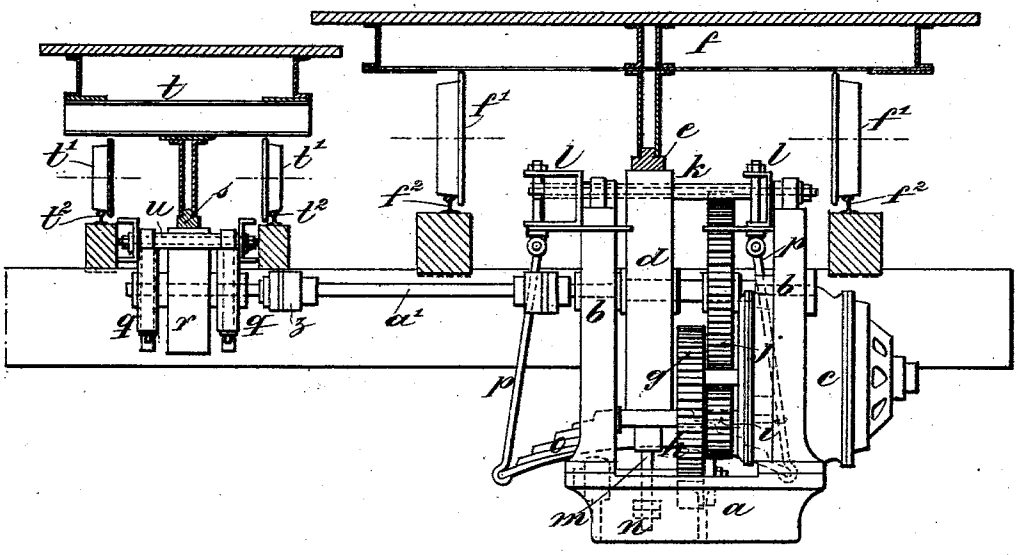

Fig. 4.

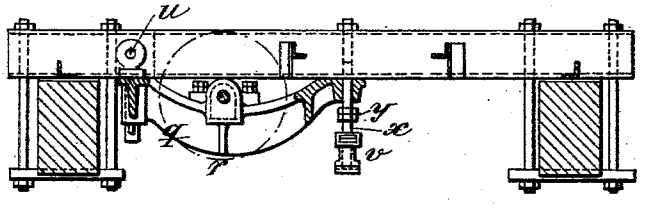

Fig. 5.

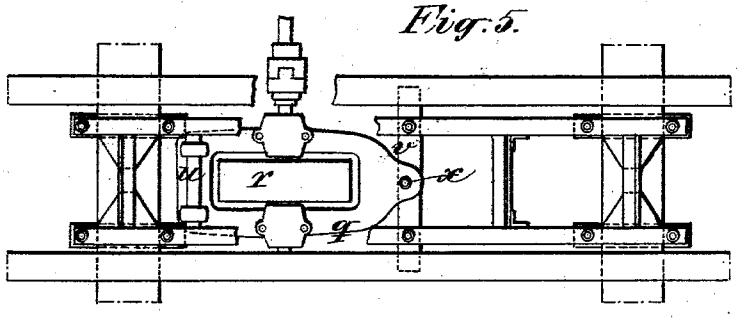

Witnesses:

S. H. Himan

Peter A. Ross.

Inventor:

Charles Cavlier de Mocomble

by Munn & Co.

His Attorney.

THE NORRIS PETERS CO., PHOTO-LITHO., WASHINGTON, D. C.

No. 633,881. Patented Sept. 26, 1899.

C. C. DE MOCOMBLE.

FRICTION DRIVING MECHANISM.

(Application filed July 8, 1899.)

(No Model.) 2 Sheets—Sheet 2.

Fig. 2.

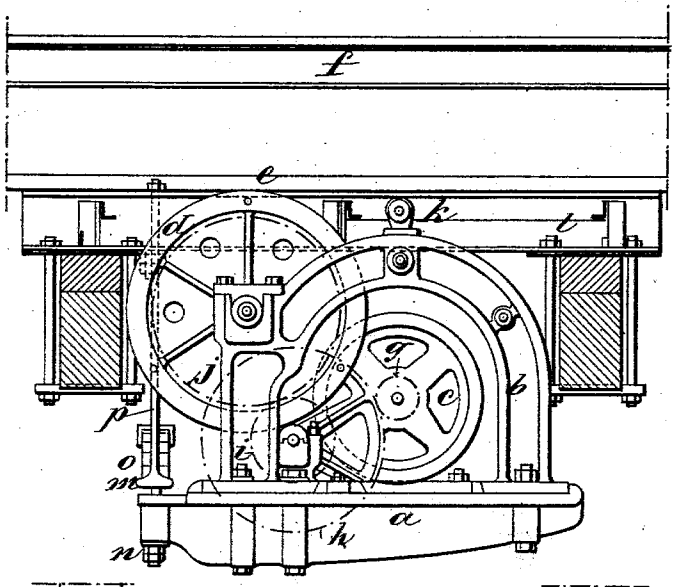

Fig. 3.

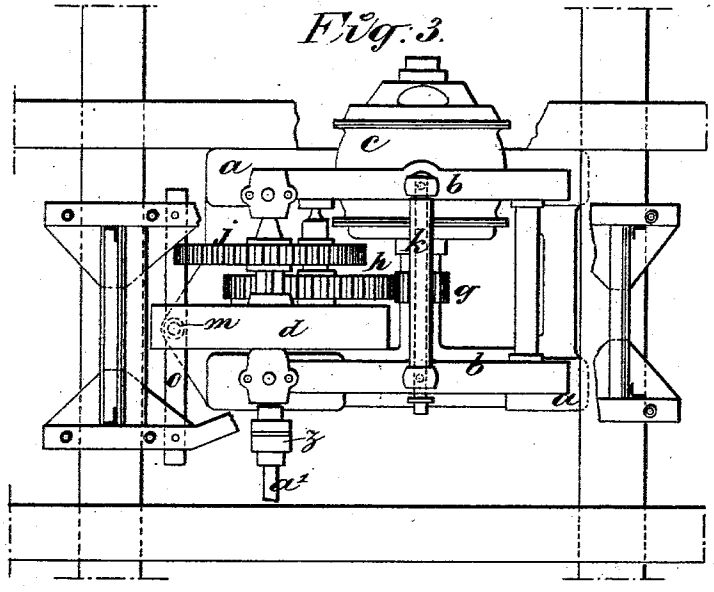

Witnesses:

F. W. Hinman

Peter R. Ross

Inventor:

Charles Cavelier de Mocomble

by Munn & Co.

his Attorneys

THE NORRIS PETERS CO., PHOTO-LITHO., WASHINGTON, D. C.

UNITED STATES PATENT OFFICE.

CHARLES CAVELIER DE MOCOMBLE, OF PARIS, FRANCE.

FRICTION DRIVING MECHANISM.

SPECIFICATION forming part of Letters Patent No. 633,881, dated September 26, 1899.

Application filed July 8, 1899. Serial No. 723,145. (No model.)

To all whom it may concern:

Be it known that I, CHARLES CAVELIER DE MOCOMBLE, a citizen of the French Republic, residing at Paris, France, have invented certain new and useful Improvements in Friction Driving Mechanisms, of which the following is a specification.

This invention relates to mechanism for driving beds, platforms, and the like by peripheral contact therewith of a rotating friction-wheel driven by a motor; and the object of the invention is to provide an elastic, yielding pressure of the driving-wheel upward against a track-rail on the under side of the bed or platform to be propelled. More than one bed or platform may be driven abreast by employing a suitable number of driving friction-wheels on the same driving-shaft.

In the accompanying drawings, which serve to illustrate an embodiment of the invention, Figure 1 is a front elevation of the driving mechanism adapted for moving two platforms abreast, the platforms being in vertical transverse section. Fig. 2 is a side elevation of the main driver as seen from the left in Fig. 1. Fig. 3 is a plan of the main driver, the platform being omitted. Fig. 4 is a side elevation, and Fig. 5 a plan, of the driver for the smaller or auxiliary platform.

As herein shown, the main platform f to be driven is mounted as a car on wheels f', rolling on rails f^2 and it has on its under side a pendent track-rail e. The auxiliary platform t also has wheels t' rolling on tracks t^2 and a pendent track-rail s.

The driver has a strong frame comprising a horizontal base a and two uprights b b, rigidly secured together. In this frame is mounted the motor c, which may be, for example, an electric motor. This motor operates the driving mechanism. Mounted in the frame is the friction driving-wheel d, which bears on the lower face of the rail e on the platform f. The motor c drives the wheel d through the medium of a train of gear-wheels g, h, i, and j.

The driver is suspended from and swings about a bar k as a pivot, and this bar is mounted in a frame l of any suitable kind. This pivotal suspension-point is at some distance to one side of the point where the wheel d bears on the track e, and it may be, as seen in Fig. 2, directly over the axis of the motor c. This manner of suspending the driver causes the rocking of the same on the bar k to move the wheel d toward or from the track e.

The end of the motor-frame near where the wheel d is situated is suspended elastically from the frame l by rods p p, coupled at their lower ends to the respective ends of a spring o, which is secured at its middle to the frame-base a by a coupling-bolt m and nut n. By means of this nut and coupling-bolt the elastic pressure of the wheel d on the track e, due to the spring o, may be nicely regulated. When once adjusted, this pressure remains nearly constant.

The driver described above may be employed alone; but by prolonging the axle or shaft of the wheel d, as seen in Fig. 1, more than one friction driving-wheel may be employed.

The construction of the auxiliary driver will be understood from inspection of Figs. 1, 4, and 5. It has a frame q, hinged at u at one end to the fixed frame above and carrying the friction driving-roller r, the axle of which is alined with that of the wheel d and the two axles connected by an intermediate shaft a'. At its end opposite to the hinge u the frame q is supported by a spring v, suspended at its ends from the frame above. At its arched center the spring has an upwardly-extending coupling bolt or pin x, which extends up through a hole in the end of the frame q and has on it nuts y, by which the pressure of the wheel r on the track s may be regulated. As there may be some variation from exact alinement between the wheels d and r, the intermediate shaft a' may have couplings z, which allow of some play.

As shown in Fig. 1, the wheel r is one-half the size of the wheel d, but this is not important. They may vary indefinitely in this respect or be of the same size.

Having thus described my invention, I claim—

1. The combination with a platform to be driven and provided with a rail at its under side, of a friction driving mechanism therefor comprising a pivotally-suspended frame under said platform, a motor and friction driving-wheel carried by said frame, the wheel being

driven by the motor and in contact with the track on the platform above, and a spring device adapted to press said wheel upward by the rocking of the frame on its point of suspension above.

2. The combination with a platform to be driven and provided with a rail at its under side, of a friction driving mechanism comprising a frame pivotally suspended under said platform, a motor mounted in said frame, a friction driving-wheel mounted in said frame and adapted to be pressed upward against the track on the platform by the rocking of said frame on its pivotal axis, gearing between said motor and wheel for driving the latter, and a spring device, adapted to press said driving-wheel upward into yielding contact with the track on the platform.

In witness whereof I have hereunto signed my name, this 27th day of June, 1899, in the presence of two subscribing witnesses.

CHARLES CAVELIER DE MOCOMBLE.

Witnesses:
JULES ARMENGAUD, Jeune,
EDWARD P. MACLEAN.