Aug. 16, 1927. 1,638,921

A. J. CUMMINGS

SUPPORTING ATTACHMENT FOR TROUSERS

Filed Oct. 13, 1926

Fig. 1.

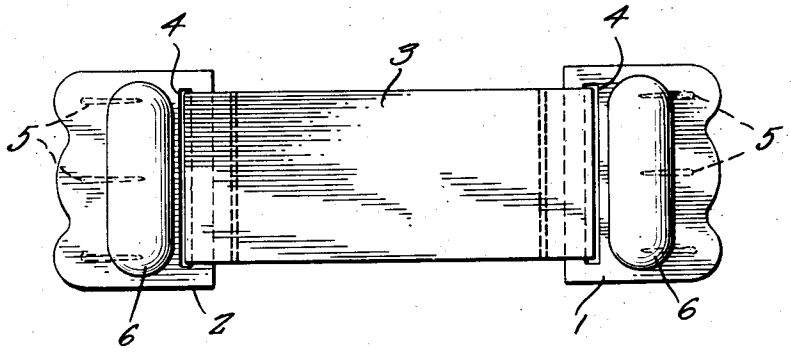

Fig. 2.

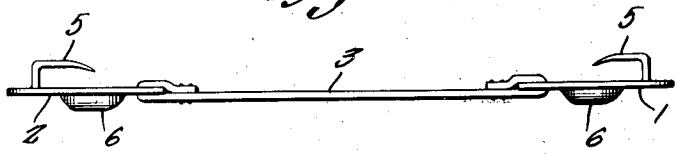

Fig. 3.

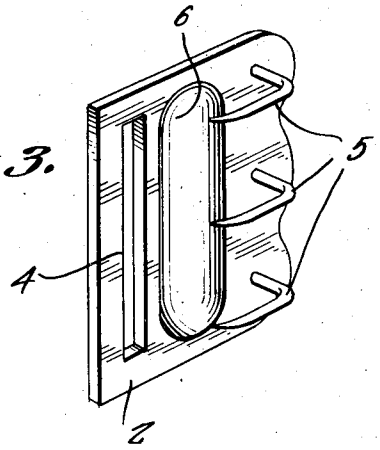

Alfred J. Cummings,
INVENTOR

BY Victor J. Evans
ATTORNEY

P. S. Hickey.
WITNESS:

Patented Aug. 16, 1927. 1,638,921

UNITED STATES PATENT OFFICE.

ALFRED JOHN CUMMINGS, OF KYABRAM, VICTORIA, AUSTRALIA.

SUPPORTING ATTACHMENT FOR TROUSERS.

Application filed October 13, 1926. Serial No. 141,367.

This invention relates to a supporting device for trousers and other garments, the general object of the invention being to provide a pair of plates having garment engaging means thereon, with an elastic webbing connecting the two plates together so that when the plates are fastened to different portions of a garment with the webbing stretched, the garment will be pulled snugly around that part of the body on which it is placed.

This invention also consists in certain other features of construction and in the combination and arrangement of the several parts, to be hereinafter fully described, illustrated in the accompanying drawings and specifically pointed out in the appended claim.

In describing my invention in detail, reference will be had to the accompanying drawings wherein like characters denote like or corresponding parts throughout the several views, and in which:—

Figure 1 is a front view of the device.

Figure 2 is an edge view thereof.

Figure 3 is a perspective view of one of the plates.

As shown in these views, the device comprises a pair of plates 1 and 2 and a webbing 3 of elastic material which has its ends passing through slots 4 formed in the plates and the ends fastened to the main portion of the webbing so that the two plates are fastened together by the webbing. Each plate is provided with L-shaped pins 5 which are adapted to penetrate a garment or the like, and each plate is formed with a depression 6 under the ends of the pins which facilitate the engagement of the garment by the pins.

This device can be used for various purposes. For instance, it can be used to support trousers by placing the pins of the plates in engagement with the rear portion of the waist of the trousers, adjacent the hip pockets with the elastic stretched so that the action of the elastic in drawing the two plates toward each other will take up slack in the waist line of the trousers and thus cause it to fit snugly the waist of the wearer. The device can be used in the same manner to support a stocking, though in this case the device would be made of much smaller size and it can be used to support both the trousers and the undergarment of a wearer. In this case, the pins would engage both the trousers and the undergarment.

It is thought from the foregoing description that the advantages and novel features of my invention will be readily apparent.

I desire it to be understood that I may make changes in the construction and in the combination and arrangement of the several parts, provided that such changes fall within the scope of the appended claim.

What I claim is:—

A device of the class described comprising a pair of plates, each having a slot therein, a webbing having its ends passing through the slots and connected with the major portion of the webbing, a row of L-shaped pins carried by each plate and an elongated depression in each plate for widening the space between the plate and the ends of the pins said depression being of greater length than the row of pins.

In testimony whereof I affix my signature.

ALFRED JOHN CUMMINGS.