July 9, 1957 C. R. RYON 2,798,524

HANDBAG AND REPLACEABLE WRAPAROUND COVER FLAP THEREFOR

Filed Nov. 28, 1956 2 Sheets-Sheet 1

Fig. 1.

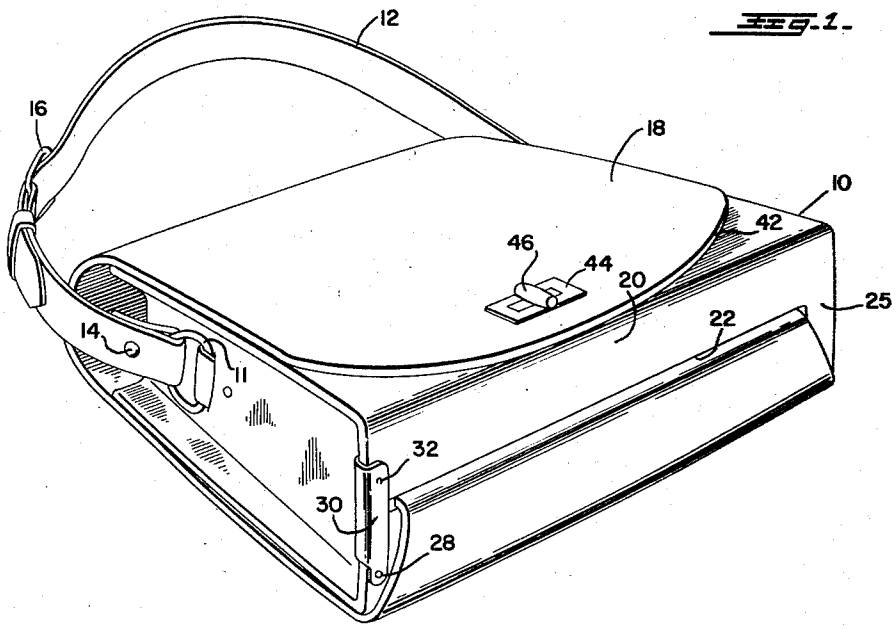

Fig. 3.

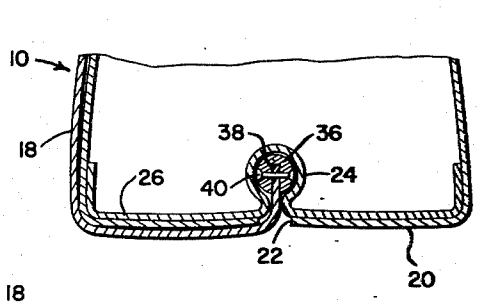

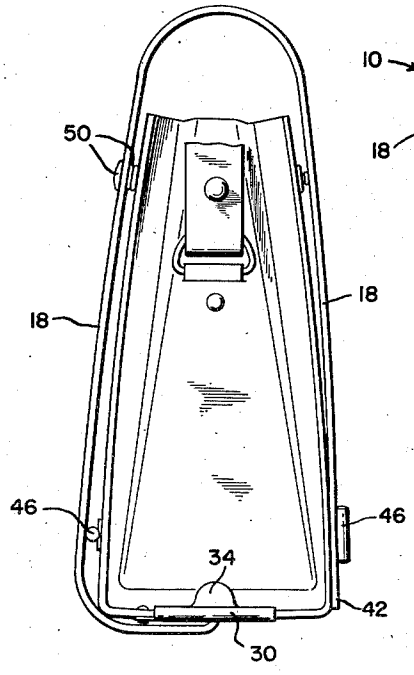

Fig. 2.

INVENTOR
CHESTER R. RYON

BY Gustave Miller

ATTORNEY

July 9, 1957 C. R. RYON 2,798,524

HANDBAG AND REPLACEABLE WRAPAROUND COVER FLAP THEREFOR

Filed Nov. 28, 1956 2 Sheets-Sheet 2

Fig. 4.

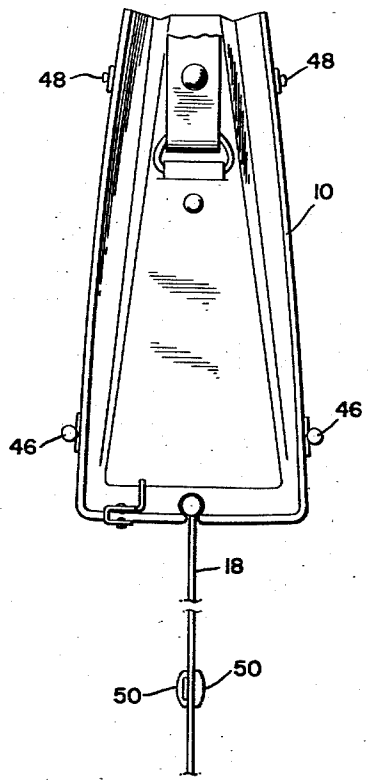

Fig. 5.

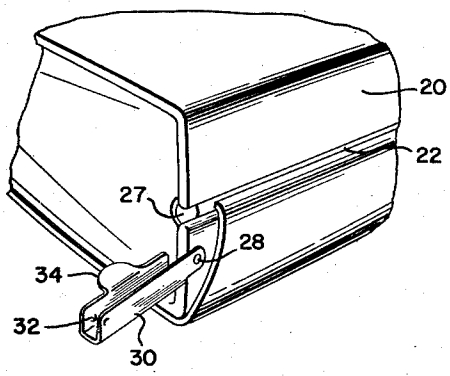

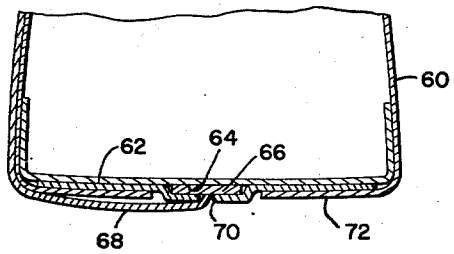

Fig. 7.

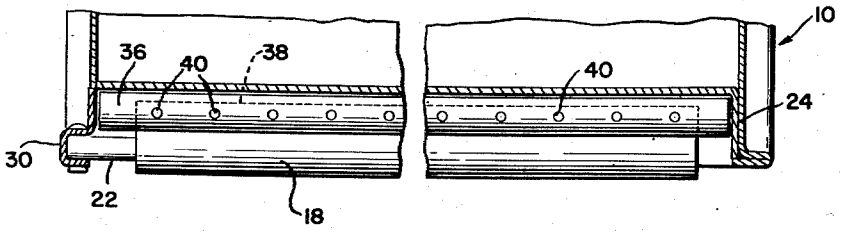

Fig. 6.

INVENTOR
CHESTER R. RYON

BY Gustave Miller
ATTORNEY

United States Patent Office 2,798,524 Patented July 9, 1957

2,798,524

HANDBAG AND REPLACEABLE WRAPAROUND COVER FLAP THEREFOR

Chester R. Ryon, Alexandria, Va.

Application November 28, 1956, Serial No. 624,839

6 Claims. (Cl. 150—28)

This invention relates to a handbag and a replaceable wraparound cover flap therefor, and has for an object to provide a handbag and cover flap wherein the cover flap may be readily and easily removed and replaced and as readily reversed so that one single handbag may provide many different appearances by having the removable cover have different appearances on opposite sides thereof, and by providing as many additional removable covers as may be desired, each of which may have a different appearance from the previous covers as well as different appearances on opposite sides thereof.

As is well known, most women consider their handbags as a necessary matching part of their outfits; they usually have different bags to match different clothing outfits. With this invention, the same handbag may be used and made to match any desired outfit by merely having a matching wraparound cover flap matching the outfit, readily removable and replaceable on the handbag, thus eliminating the necessity for changing the contents of the handbag from one bag to another and enabling a matching cover for the outfit to be readily placed in position on the handbag. Furthermore, each individual removable and replaceable cover flap may be reversible and present a different appearance, thus enabling the same cover to complement two different outfits. This is particularly desirable in the case where a woman would like her handbag to match an outfit including her coat when she is wearing one, and would like the same bag to cooperate with her outfit when she is not wearing a coat, and in such case, the removable flap cover may have one side complementary to the coat, and the other side complementary to the outfit without the coat, so that if the woman removes her coat, she can make her handbag complement her outfit without the coat by merely reversing the cover flap without even removing it from the handbag.

A further object of this invention is to provide a handbag and a readily removable and replaceable wrap around cover flap therefor wherein the handbag is provided with a slot extending along the bottom from one end thereof, open at one end and closed at the other end, with means for readily opening and closing the open end, and wherein a removable and replaceable cover flap is provided with an end that is complementary to the slot in the bottom of the handbag so that it may be readily slid into the slot and be held in position by the closure means at the end of the slot so that the cover flap may be wrapped around the handbag in either direction, with means for latching the free end of the cover flap to the side of the handbag after it has passed over the top of the handbag, and with further means for detachably securing an intermediate portion of the flap to the handbag before it has passed over the top thereof, thereby making the first portion of the flap provide a secure hinging portion for the portion of the flap that passes over the top of the handbag and is secured on the opposite side thereof.

Still a further object of this invention is to provide a removable and replaceable as well as a reversible cover flap for a handbag which will have means for cooperating with a slot in the bottom of the handbag for securing the flap thereto, and which cover flap may be made with different appearances on the opposite sides thereof, and

which may be made of any suitable type of material of which handbags are often made, including rubber, plastic, and various types of fabrics and materials in any desired color or shape. Thus, if a woman has a blue cloth outfit and a plastic raincoat, one of the covers might be provided with blue cloth material on one side thereof and plastic raincoat material on the other side thereof so that when the woman is wearing the raincoat she can have the plastic raincoat material visible on the outside of the handbag, and if she removes the raincoat, she can merely reverse the cover flap to the opposite side and thus have a blue cloth material visible thereon exactly matching the blue cloth material of her outfit. Obviously, many other combinations of colors and materials may be made available, all useable with the same original handbag, thus eliminating the necessity of changing the contents of the handbag from one bag to another.

With the foregoing and other objects in view, as will hereinafter become apparent, this invention comprises the combination, constructions and arrangements of parts hereinafter set forth, disclosed, claimed and illustrated in the accompanying drawing wherein:

Fig. 1 is a perspective view of a handbag and wrap around cover flap of this invention.

Fig. 2 is an end view of the handbag of Fig. 1.

Fig. 3 is a transverse sectional view through a fragment of the bottom of the handbag.

Fig. 4 is a fragmentary end view of the handbag showing how the cover is placed in the open slot.

Fig. 5 is a fragmentary perspective view of the bag bottom showing the slot closing means.

Fig. 6 is a longitudinal sectional view showing the slot cooperating means secured on the end of the cover flap.

Fig. 7 is a fragmentary sectional view through the bag bottom showing a different type of slot.

There is shown at **10** a woman's handbag made of any suitable material such as leather, cloth, fabric, plastic, metal or other similar material of which handbags are usually made, and provided at its ends with handle receiving rings **11** through which the ends of a handbag strap **12** may be permanently or detachably secured as by snay fasteners **14**, the handbag strap **12** being provided with a conventional adjustable buckle **16** for adjusting the length thereof. With the fastening means **14** being in the form of a snap fastener, it is obvious that the handbag strap **12** may be removed and replaced as desired, and also may be reversed to have the inner and outer sides interchangeable which may be desirable when such opposite sides have different appearances and it is desired to make the appearance of the strap conform with the appearance of the handbag.

A wrap around cover **18** is provided for the handbag **10** and this invention consists in the manner and structure in which the wraparound cover **18** is reversibly, removably, and replaceably secured at one end to the bottom of the handbag **10** and at its other end to the side of the handbag **10** after it has been wrapped around the handbag and over the top thereof.

The bottom **20** of the handbag **10** is provided with a slot **22** which extends inwardly at **24**, the portion **24** of the slot **22** being provided in a metal base **26** secured in any suitable manner within the bottom **20** of the handbag **10**. Although not shown, an inner lining for the bag **10** may obviously conceal the metal base **26** within the bag so that it will not be visible within the bag. As here shown, the slot **24** is circular in cross section, and one end of the slot **22** is closed as at **25** as by the material of the handbag **10**. The other end of the slot **22** is open through the end of the bottom **20** of the handbag **10** as at **27**. Pivotally secured as at **28** to the bottom of the bag **20** at one side of the open end **27** of slot **22** is a hinged catch **30** having inwardly extending friction pimples **32** at

the free end thereof and provided with a finger piece **34** on the side extending toward the top of the bag so that it may be readily engaged by one's finger or finger nail for moving it between opened and closed positions so that it may be closed across the open end **27** of slot **22** as illustrated in Fig. 1 or may be opened to permit the cover flap to be removed or replaced therein as shown in Figs. 4 and 5.

The wrap around cover flap **18** of this invention consists of a single or double sheet of material of any suitable nature such as leather, plastic cloth, fabric, or any desired material of which handbags are often made, and may have one surface of one material and the opposite surface of a different material or of a different appearance as desired, differing in color or decoration or fabric or any combination thereof as desired. One end of the cover flap **18** is made complementary to the slot **24** by any suitable manner. As here shown, a rod **36** has a slot in which the end **38** of the flap **18** is secured as by countersunk rivets **40** suitably spaced therealong. The length of the rod **36** is such that when the closing latch **30** is in closed position, as illustrated in Fig. 6, the rod **36** will just snugly fit in the slot **24** extending the full length thereof and thus hold the cover flap **18** in proper position relative to the bag **20**.

The free end **42** is provided with some type of latch cooperating means such as a suitably reinforced opening **44** for cooperating with a rotatable latch **46** secured in the side of the handbag **10**, this rotatable latch **46** may be provided only on one side of the handbag **10**, but for convenience it may be duplicated on the opposite side as shown. If only one rotatable latch **46** is provided, the cover flap **18** may be reversed by removing it from the slots turning it end for end and replacing it, but if both rotatable latches **46** are provided, the cover flap **18** may be reversed by merely unlatching it from one side then wrapping it around in the opposite direction and latching it on the opposite side.

To facilitate the use of the cover flap **18**, one side (or both sides) of the handbag **10** adjacent its top is provided with one part of a snap fastener as at **48**, and the complementary part of the snap fastener is provided on the opposite side (or sides) of the cover flap as at **50**, thus making the cover flap reversible as well as replaceable.

In Fig. 7, the bag **60** has been shown as having an inside metal base **62** provided with a slot **64** which is rectangular in cross section rather than circular in cross section as at **24**, and this rectangular slot **64** cooperates with a T-end **66** provided on the end of a wraparound cover **68** extending through the slot **70** in the bottom **72** of the handbag **60**. This form of slot **70** with its T-shaped slot at **64** is illustrated in order to demonstrate the fact that the slot may be made in any suitable shape so long as the securing end **66** of the wraparound cover flap **68** is made complementary thereto so that it may be slid into one end of the slot and secured therein by any suitable matching means across the open end of the slot. The construction and operation of the handbag at **60** is otherwise similar to that already described.

In operation, the opposite sides of the wraparound cover flap **18** may be of different materials or colors or finishes or fabrics or appearances in any manner as desired, and furthermore a plurality of cover flaps **18** may be provided for each handbag **10**. The handbag **10** may be manufactured initially with a half dozen or more removable and replaceable and reversible cover flaps **18**, but they may also be sold separately, particularly as an accessory for a particular outfit so that when a woman purchases a new outfit, she may also at the same time secure a new flap **18** complementary to the new outfit which she may then use to readily replace a previous cover flap **18** and thus make her bag conform to her new outfit as desired. Also, inasmuch as the bag handle **12** is removable and replaceable, bag straps **12** may be made similarly with opposite surfaces corresponding to the opposite surfaces of the cover flap **18** and may be removed and replaced at the same time if desired, or the hand bag strap may be left in a neutral finish similar to the finish of the handbag **10** per se when the wraparound cover flap **18** is not placed therearound.

Although this invention has been described in considerable detail, such description is intended as being illustrative rather than limiting, since the invention may be variously embodied and the scope of the invention is to be determined as claimed.

Having thus set forth and disclosed the nature of this invention, what is claimed is:

1. A handbag comprising a bag and a replaceable wraparound cover flap therefor, said bag including a bag bottom having a slot extending longitudinally thereof, said slot being open at one end thereof and closed at the other end thereof, manually controllable means for readily closing and opening the open end of said slot, said cover flap having slot cooperating means at one end thereof complementary in shape and size to said slot, said cooperating means being arranged to be slid into and removed from said slot only through the open end thereof, said slot end closing means serving to firmly retain said cooperating flap means end against accidental removal, said flap being arranged to extend over one side of the bag, then over the top of the bag, and then down over the opposite side of said bag, means for detachably securing said flap to said first mentioned side of said bag, and means for detachably latching the free end of said flap to said second mentioned side of said bag to thereby hold said flap over the top of said bag.

2. The handbag of claim 1, a metal base in said bag bottom, said bag bottom slot being located in said metal base.

3. The handbag of claim 1, said wraparound flap being reversible and arranged to present a different appearance on opposite sides thereof, said detachable securing means of said flap being available from both opposite sides of said flap.

4. A handbag comprising a bag and a readily removable and replaceable wraparound cover flap therefor, said bag having a flap latching means on at least one side thereof, detachable flap attaching means on the opposite side thereof, and means in the bottom of said bag and means on one end of said flap cooperating with said means in the bottom of said bag for readily attachably and detachably securing said end of said flap to said means in the bottom of said bag, said flap having latch cooperating means adjacent to the opposite end thereof for cooperating with said bag side latch means, and said flap also having attachable cooperating means intermediate its ends cooperating with said bag side attaching means, said readily attachable and detachable cooperating means in said bag bottom comprising a slot extending therein from one open side thereof and closed at its other side, means for closing said open side of said slot and complementary slot engaging means provided on the securing end of said flap.

5. The handbag of claim 4, said bag bottom slot and said complementary slot cooperating means of said flap being circular in cross section.

6. The handbag of claim 4, said bag bottom slot and said complementary slot cooperating means of said flap being rectangular in cross section.

References Cited in the file of this patent

UNITED STATES PATENTS

2,023,144	Miller	Dec. 3, 1935
2,093,097	Potash	Sept. 14, 1937
2,723,696	Kase	Nov. 15, 1955
2,784,756	Resnick	Mar. 12, 1957

FOREIGN PATENTS

1,079,577	France	May 19, 1954