Jan. 16, 1934. A. S. JOHNSON 1,943,322

CEMENTING MACHINE

Filed Aug. 5, 1930 2 Sheets-Sheet 1

Fig:1.

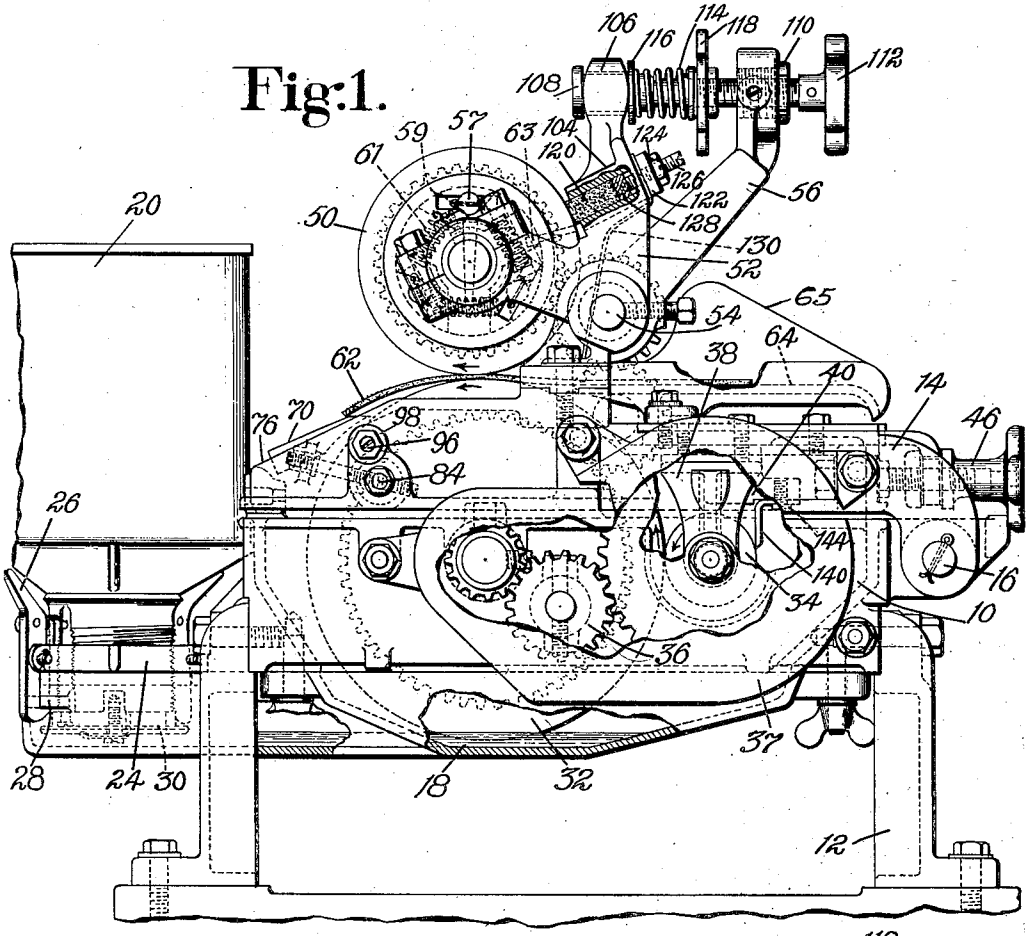

Fig:3.

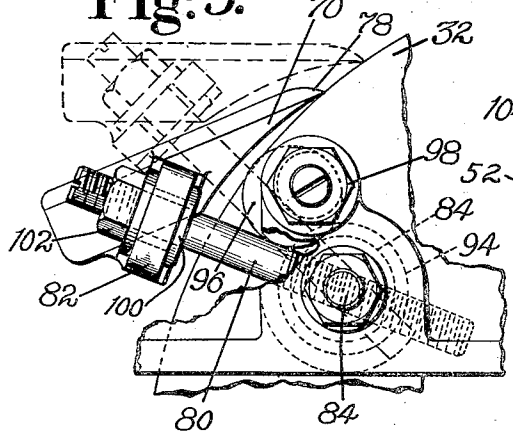

Fig:2.

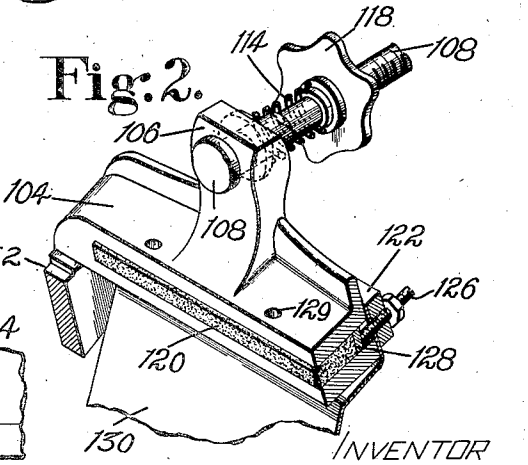

INVENTOR

Arthur S. Johnson

By his Attorney,

Harlow Davis

Jan. 16, 1934. A. S. JOHNSON 1,943,322

CEMENTING MACHINE

Filed Aug. 5, 1930 2 Sheets-Sheet 2

Fig. 5.

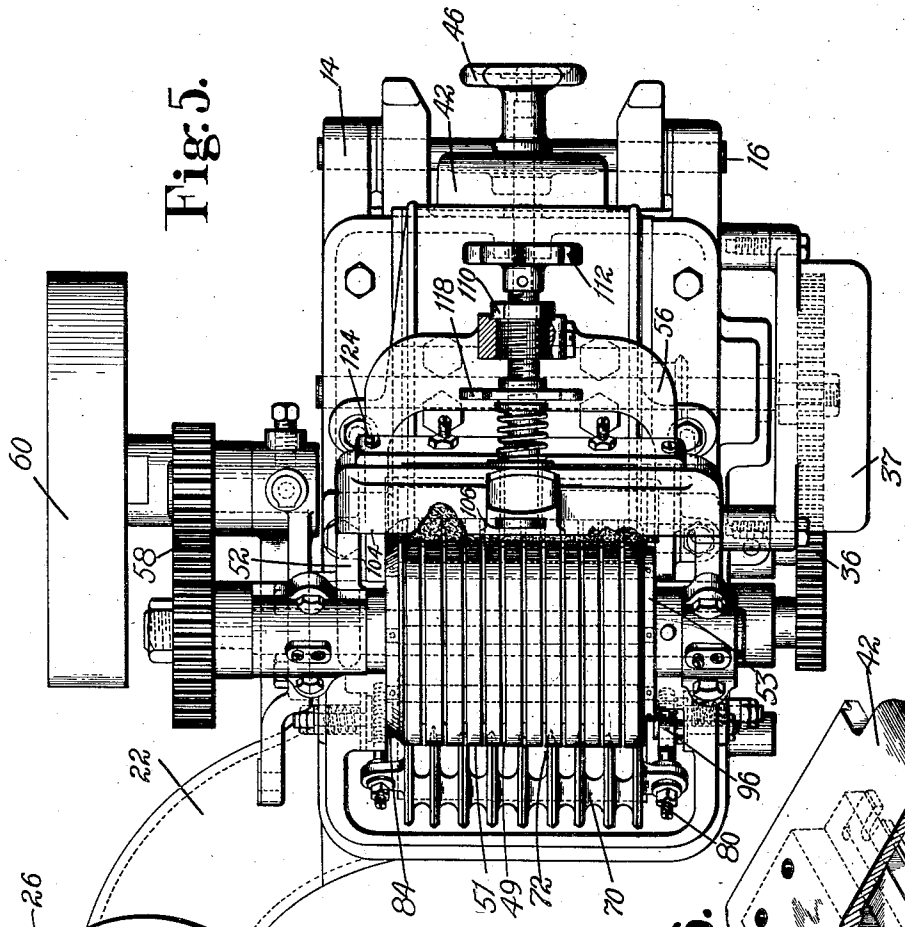

Fig. 6.

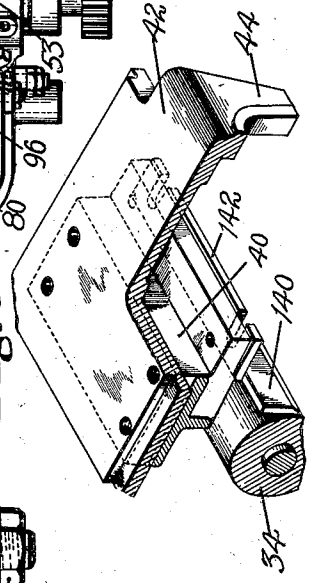

Fig. 4.

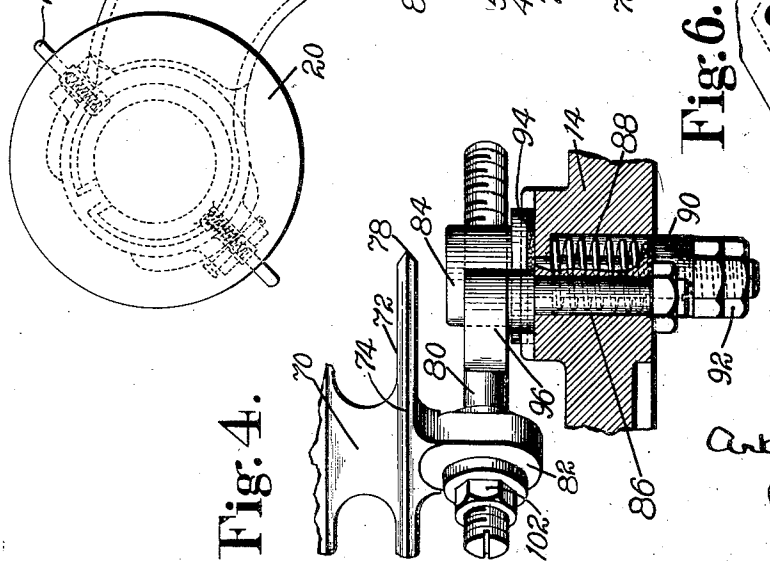

INVENTOR

Arthur S. Johnson

By his Attorney,

Harlow B. Davis

Patented Jan. 16, 1934 1,943,322

UNITED STATES PATENT OFFICE

1,943,322

CEMENTING MACHINE

Arthur S. Johnson, Beverly, Mass., assignor to United Shoe Machinery Corporation, Paterson, N. J., a corporation of New Jersey

Application August 5, 1930, Serial No. 473,155, and in Germany July 8, 1930

12 Claims. (Cl. 91—51)

This invention relates to cementing machines and is herein illustrated as embodied in a machine of the type shown in Letters Patent of the United States No. 1,780,341, granted Nov. 4, 1930, upon the application of John W. Cosgrove.

The machine illustrated in that Letters Patent is frequently utilized for the application of a coating of cement, such as latex, to the whole of one surface of a piece of work, such, for example, as the sole of a shoe or the lift of a heel. In the patented machine, the cement is applied to the under surface of the work by means of a cylindrical roll dipping in a receptacle, and the progress of the work as well as the contact of the work with the cement-applying roll is controlled by means of a driven presser roll bearing against the opposite side of the work and mounted upon a pivoted carrier. Provision is made for adjusting the initial undisplaced position of this presser roll with respect to the applying roll so as to maintain the desired separation between, and hence to prevent contact of, the two rolls, and a spring is provided for holding the presser roll yieldably against the work. The quantity of cement carried up by the applying roll for application to a piece of work is determined by means of a driven doctor roll positioned adjacent to the upgoing side of the applying roll. The position of this doctor roll with respect to the applying roll may be readily adjusted so as thereby to control the quantity of cement. Upon the delivery side of the machine there is provided a work stripper in the form of a grid having pointed ends positioned closely adjacent to the applying roll and positioned alongside the path of the work so that coated pieces of work will be stripped from said roll and carried away from the machine.

An object of this invention is to provide an improved machine of the type shown in the Cosgrove Letters Patent to which reference has been made above.

When such machines are utilized for flimsy pieces of work a position of the work stripper substantially parallel with a line tangent to the surface of the applying roll at the point of contact with the presser roll and hence parallel to the normal path of the work is desirable. With other kinds of work having greater rigidity, it becomes desirable to position the work stripper in such a way that there will be room for the hand of the operator to grasp the oncoming piece of work. In accordance with one feature of the invention the illustrated machine provides an adjustably mounted work stripper the operative position of which may be substantially parallel to the normal path of the work or it may be angularly related thereto and, as shown, depressed below the horizontal path. Preferably too, and as illustrated, the work stripper is mounted for displacement, in case of accidental jamming of the work between the applying roll and the stripper, by supporting it upon pivot studs which are frictionally held in place, means being provided to limit the movement of the stripper toward the roll.

In accordance with still other features of the invention, the illustrated machine is so constructed that adjustment of the initial position of the presser roll to accommodate thin or thick work does not disturb the tension of the spring by means of which this presser roll is held against the work. Provision is also made for independently adjusting the tension of the spring when desired as, for example, when additional pressure is needed to hold soles with beveled shanks against the cementing roll.

Further, as illustrated, a felt wiper is carried in a through slot in this carrier to bear against the down-going surface of the presser roll so as to remove therefrom any cement which may accidentally be deposited upon the presser roll. As illustrated, this felt may be removed for renewal by detaching a closure plate for said slot. A finger guard positioned adjacent to the bite of the rolls, to prevent the operator from pushing the work forward far enough to get his fingers caught between the two rolls, is held in position by the retaining means for the closure.

In the illustrated machine, a guard is positioned close to the upgoing side of the doctor roll and breaks up the bubbles of the foam caused by the constant agitation of the latex cement and also prevents foam or a film of cement on the doctor roll from being carried around to the applying roll thereby insuring against uneven application of cement by the applying roll. The guard in question is so mounted upon the carrier for the doctor roll that it may be adjusted with respect thereto when setting up the machine but having once been adjusted will be retained in the same relation to the doctor roll regardless of any adjustment of the position of the latter.

These and other features of the invention will now be more fully set forth in the following specification with reference to the accompanying drawings, in which

Fig. 1 is a side elevation of the machine with parts broken away and in section;

Fig. 2 is a detailed perspective view of the felt wiper and the guard plate;

Figs. 3 and 4 are fragmentary views on an enlarged scale of the mounting for the work stripping grid;

Fig. 5 is a plan view of the machine; and

Fig. 6 is a detailed perspective showing the foam guard and the manner of mounting the same.

The machine herein illustrated follows the general arrangement of that shown in the prior Letters Patent mentioned above and has a two-part frame, the lower portion 10 of which is mounted upon legs 12 and the upper portion 14 of which is pivotally mounted on the lower portion by a pin 16. Attached to the lower portion 10 is a cement receptacle 18 in which a constant supply of cement at a predetermined level is maintained by means of a barometric feed can 20. This can is supported upon a neck 22 of the receptacle by means of a ring 24 which is threaded on the can so that the height of the cement in the receptacle may be accurately determined. Latches 26 are attached to this ring and are arranged to engage lugs 28 on the receptacle and to lock the can 20 to the receptacle until it has been turned to a position in which a valve 30 at its lower end is closed before said can can be removed from the receptacle. This arrangement of latches and valve is shown and claimed in Letters Patent of the United States No. 1,922,297, granted August 15, 1933, upon an application which is a continuation in part of my prior application Serial No. 346,383, filed March 12, 1929, for Improvements in straightening and cementing machine for French binding.

The machine is provided with a cement applying roll 32 which has a yielding surface resulting from the use of a rubbery composition like that employed for printer's ink rolls. This roll is journaled in the lower portion 10 of the frame and driven in a counterclockwise direction as viewed in Fig. 1. The quantity of cement taken up by the roll is controlled by means of a driven doctor roll 34 which is rotated through a gear train 36 from the applying roll 32 so that it turns also in a counterclockwise direction as viewed in Fig. 1. A cover 37 protects the operator from this gear train 36. The doctor roll 34 is supported in hangers 38 forming part of a carrier 40 (Fig. 6) which is attached by screws to a sliding cover 42 mounted in guideways in the upper portion 14 of the frame. This cover 42 has a depending slotted end portion 44 which engages a groove in a hand screw 46 so that it may be moved back and forth thereby to determine the relation of the doctor roll 34 to the applying roll 32. Also as in said prior Cosgrove Letters Patent, the machine is provided with a presser roll 50 mounted in the arms of a subframe 52 pivoted at 54 upon a bracket 56 which is attached to the upper portion 14 of the frame. As herein illustrated, the presser roll 50 is made up of a series of rings 51 which are yieldably mounted so that the surface of the roll will conform to the surface of the work even though the work is of uneven thickness. Grooves formed between adjacent rings prevent a sticking together of the rings when cement is inadvertently lodged thereon. These rings 51 are held upon a spider comprising end plates 53 joined by a series of rods 57. Positioned upon these rods are V-shaped supporting members 59, the outer ends of which bear against the inner circumference of the corresponding ring and the V-shaped members are held apart by a series of coil springs 61 allowing them to yield inwardly as pressure is applied to the rings which make up the presser roll 50. In order that there may not be a shifting of the rings around the supporting members, each one of the rings is provided with a pin 63 the head of which is positioned between two of said V-shaped supporting members so that any drag imparted to the rings as they feed the work will be immediately taken up by the adjacent supporting members 59, 57 and slipping of the rings with respect to the supporting members prevented. This avoids a wrinkling of the surface of the work which is sometimes found. This presser roll is driven through gears 58 by means of power supplied to a driven pulley 60. Pieces of work such as a sole 62 are presented to the bite of the rolls 32 and 50 by being pushed along a work table 64 from right to left. The work table 64 has at its far side an upstanding rib 65 so that the operator standing in front of the machine as viewed in Fig. 1 will fan a handful of soles and bring them successively against this rib as he drops them on to the table and pushes them ahead into contact with the rolls. As herein shown the axis of the presser roll is set slightly ahead of the axis of the cementing roll so that pieces of work will be deflected slightly downwardly by reason of this relation of the rolls without any danger that the work pieces may be turned upwardly to such an extent that they are inverted after they are delivered from the roll.

In order to prevent pieces of work from following the applying roll 32 back into the receptacle, the machine is provided with a work stripper 70. The stripper 70 comprises a casting in the form of a grid on which are formed a series of parallel projecting fingers 72 on the upper surface of each of which is formed a rib 74 thereby to lessen the surface contact between said stripper and the cemented surface of the work. It will be noted from Fig. 1 that the corner of the frame has been cut away at 76 so that the work stripper may be mounted in any desired angular relation to and below the path of the oncoming work. The position of the stripper 70 may vary from a substantially horizontal position indicated by dotted lines in Fig. 3 where it is substantially parallel to the normal path of the work and suitable for flimsy work to an angularly related position depressed below the horizontal by an amount corresponding to the angle at which the frame is cut away at 76. By reason of this depressed position of the work stripper, the operator's hand may be inserted beneath oncoming soles, for example, to grasp them by the edges, and further there is less tendency for pieces of work being fed through the machine to catch between the pointed ends 78 of said stripper and the surface of the applying roll 32. Furthermore, the stripper is pivotally mounted and frictionally held in position so that it may readily be displaced away from the surface of the applying roll 32 by the pressure of work, thereby avoiding possible damage to the roll 32. The stripper may also be displaced by the operator in case he desires to clean out any particles which may have been caught under the points 78. To this end, the stripper is supported by means of bolts 80 passing through lugs 82 at the ends of the stripper and through studs 84 frictionally held in position in the upper portion 14 of the frame. The frame 14 is recessed at 86

around the studs 84 to receive springs 88. Each of these springs is held in position by a collar 90 and nuts 92 and between the head of each stud 84 and the frame is a leather washer 94. It follows, therefore, that the stripper 70 may readily be turned with the studs 84 in a counterclockwise direction to carry the points 78 away from the soft surface of the applying roll 32. When turned back toward the roll the operative position of the grid is determined by eccentric stops 96. These eccentric stops 96 are pivoted in the frame 14 and may be locked in adjusted position by nuts 98. In case it is desired to set the stripper 70 in a different angular relation to the periphery of the roll 32, it may be necessary to change the relation of the supporting bolts 80 to the studs 84. For this purpose the bolts are threaded in the enlarged heads of the studs 84. The bolts are shouldered at 100 beneath the lugs 82 on the stripper so that by releasing clamp nuts 102 they may be rotated in said lugs and the position of the stripper 70 adjusted. It will be understood, however, that an inclined position similar to that which is illustrated in full lines in Fig. 3 is the usual position for the stripper.

Provision is made here as in the machine of the Cosgrove Letters Patent for adjusting the initial position of the presser roll 50. An improved arrangement is provided for this purpose in which the spring tension and the initial position may be readily adjusted independently. To this end the arms of the sub-frame 52 which supports the presser roll 50 are joined by a cross bar 104 having a central upwardly projecting lug 106 which is apertured to receive a headed bolt 108 threaded in a bushing 110 itself threaded in the upper end of the bracket 56. A hand wheel 112 pinned to the right end of this bolt 108 facilitates the adjustment of the initial position of the presser roll 50.

When the machine is set up at the factory, the threaded bushing 110 is adjusted to such a position that contact with the hub of the hand wheel 112 will prevent the presser roll from being brought into contact with the cementing roll. After the bushing 110 has been so adjusted, it is held in position by a set screw. The presser roll is yieldingly held against the work by means of a spring 114 surrounding the bolt 108 and pressing against a washer 116 which bears against the lug 106 and the other end of the spring 114 bears against the hand wheel 118 which is threaded on the bolt 108, thus leaving the spring tension undisturbed by changes in the position of the sub-frame 52. It will be understood that the bolt 108 fits loosely in the lug 106 so that a slight angular movement of the lug with respect to the bolt is permitted. This combined arrangement enables the operator to adjust the position of the presser roll 20 for thin soles or thick soles, for example, and then if necessary to adjust the spring pressure with which the roll is held against the work, such as thin soles or those with beveled shank portions, quite independently of its initial position.

In order to keep the surface of the presser roll 50 clean so that any bits of cement which are accidentally picked up on said roll will not be carried over to the surface of the work, the machine is provided with a wiper felt 120 carried in the slot of the cross member 104. In the upper surface of the cross bar in which the felt is mounted, holes 129 have been provided through which a lubricant such as kerosene may be applied to the felt to facilitate the cleaning action of the felt upon the presser roll. The slot for the felt extends through said cross member and is closed at the rear by a plate 122 secured thereto by screws 124. This plate furnishes a support for adjusting screws 126 which press against a backing bar 128 by means of which the contact of the felt with the presser roll may be evened up. With such an assembly, it is possible to renew the felt by removing the screws 124 and taking out the backing bar 128, after which the felt itself may be removed from the machine without disturbing any of the other parts. The screws 124 are also used to hold in position a finger guard 130 shown in dotted lines in Fig. 1 and in full lines in Fig. 2. This finger guard extends down toward the work table 64 adjacent to the bite of the rolls so that the operator pushing a piece of work along said table for engagement by the rolls cannot accidentally get his fingers caught between the rolls.

After continued use of the machine, there may be a formation of foam in the latex in the chamber provided by the lower frame portion 10 above the receptacle 18 and this foam may, unless otherwise prevented, cause the cement to overflow. The foam may also be carried around to the applying roll 32 to form bubbles or irregular spots thereon which will appear upon the finished work and prevent a perfectly uniform application of cement to the coated surface. Accordingly, the machine is provided with a foam guard or breaker in the form of a scraper plate 140 having a depending sharp edged portion closely adjacent to the doctor roll 34 and a horizontal slotted portion 142 for adjustable engagement with holding screws 144. These screws are threaded in an extension of the casting 40 which supports the doctor roll 34. As a result, when the machine is being assembled the foam breaker 140 may be placed in correct relation to the doctor roll 34 and then in the use of the machine this relation may be maintained regardless of the adjustment of the doctor roll by means of the hand screw 46, because the foam breaker is supported upon the adjustable support for the doctor roll itself.

In the use of the machine, it will be assumed that the can 20 has been filled with cement such as latex so that the receptacle 18 is filled to the desired level and that the position of the work stripper 70 has been adjusted to suit the conditions in a particular factory by manipulation of the eccentric studs 96 and if necessary of the supporting bolts 80. After this, the operator will adjust the position of the doctor roll 34 by manipulation of the hand screw 46 and will determine the position of the presser roll support by manipulating the hand wheel 112, depending upon whether relatively thin or relatively thick work is to be handled. The spring pressure with which the presser roll is held against the work may be varied if desired by turning the hand wheel 118, after which pieces of work may be fed rapidly over the table 64 without danger that the upper surfaces of the pieces will be soiled with cement or that the operator's fingers will be caught between the rolls.

Having thus described my invention, what I claim as new and desire to secure by Letters Patent of the United States is:

1. In a cementing machine, a cement-applying roll arranged to coat pieces of work, a presser roll cooperating therewith, a work stripper cooperating with the delivery side of the applying roll, and adjustable supporting means for said work stripper movable from a position where

the work stripper is substantially parallel with a line tangent to the surface of the cement-applying roll at the point of contact with said presser roll to a position where it is at an acute angle thereto.

2. In a cementing machine, co-operating rolls for feeding the work along a predetermined path, one of said rolls being arranged to apply cement to a surface of the work, a work stripper positioned adjacent to and co-operating with the delivery side of the applying roll, and means for adjustably supporting said work stripper at each of a plurality of widely separated angles to the normal path of the work in each of which it is in operative relation to the applying roll.

3. In a cementing machine, a frame, a cement-applying roll journaled therein and arranged to coat pieces of work presented to the upper surface of the roll, a work stripper positioned adjacent to the delivery side of the roll, pivot means for supporting said work stripper, said pivot means being frictionally held in position in the frame whereby the work stripper may be displaced under abnormal pressure, and means for limiting the movement of the stripper toward the roll.

4. In a cementing machine, a frame, a cement-applying roll journaled therein and arranged to coat pieces of work presented to the upper surface of the roll, a work stripper positioned adjacent to the delivery side of the roll, displaceable supporting means for said work stripper, allowing the stripper to be pushed out of its normal position, and an adjustable stop for determining the normal position of the work stripper when returned after displacement.

5. In a cementing machine, a frame, a cement-applying roll journaled therein and arranged to coat pieces of work presented to the upper surface of the roll, a work stripper positioned adjacent to the delivery side of the roll and mounted upon displaceable frictionally-held means thereby holding the work stripper displaceably in position, and an adjustable stop co-operating with said means to determine the normal position of the work stripper.

6. In a cementing machine, a frame, a cement-applying roll journaled therein and arranged to coat pieces of work presented to the upper surface of the roll, a work stripper positioned adjacent to the delivery side of the roll, pivot bolts frictionally positioned in the frame, means on said work stripper for securing it to said bolts, and eccentric stops in the frame positioned to engage said securing means thereby to determine the normal position of the work stripper as it is returned to position after displacement.

7. In a cementing machine, a frame, a cement-applying roll journaled therein and arranged to coat pieces of work presented to the upper surface of the roll, a work stripper positioned adjacent to the delivery side of the roll, pivot bolts frictionally positioned in the frame, rods extending inwardly from said work stripper and threaded in said pivot bolts, and adjustable stops co-operating with said rods.

8. In a cementing machine, a frame, an applying roll, a presser roll associated with said applying roll, a presser-roll carrier pivoted in said frame, a coiled spring urging said presser roll toward the applying roll, means for adjusting the tension of said spring, and means bearing against said frame and passing through the coils of said spring to limit the movement of the presser-roll carrier toward the applying roll, said means being adjustable to determine the initial separation of the presser roll and the applying roll without varying the tension of the spring.

9. In a cementing machine, an applying roll, a presser roll co-operating with said applying roll, a fixed bracket, a carrier for said presser roll mounted for movement with respect to said fixed bracket to vary the relation of the said rolls, threaded means for limiting movement of said carrier with respect to said bracket in a direction to carry the presser roll toward the applying roll, and an adjustable stop upon said bracket limiting the adjustment of the threaded means thereby to prevent the contact of the presser roll with the cementing roll.

10. In a cementing machine, a frame, an applying roll mounted therein, a co-operating presser roll, an adjustable carrier for said presser roll, means extending between said carrier and said frame for limiting movement of the presser roll toward the applying roll comprising a bolt having a hand wheel, a bushing adjustably mounted in the frame in which bushing said bolt is threaded, and means for securing said bushing in adjusted position whereby, by co-operation between the bushing and hand wheel, movement of the presser roll toward the applying roll is limited and contact between the two prevented.

11. In a cementing machine, an applying roll, a presser roll co-operating with said applying roll, a fixed bracket, a carrier for said presser roll mounted for movement with respect to said fixed bracket to vary the relation of the said rolls, means extending between said carrier and bracket and threaded in one of them to limit the movement of said presser roll toward said applying roll, a spring surrounding said threaded means urging said rolls together, and a hand wheel threaded upon said threaded means to vary the tension of the spring.

12. In a cementing machine, a presser roll, a movable carrier for said presser roll, a through slot in said carrier having one end open and accessible to the operator and the other end adjacent to the presser roll, a wiper positioned in said slot to engage the surface of the presser roll, and a detachable cover, for said slot, carrying screw means for adjusting the pressure of the wiper upon the roll.

ARTHUR S. JOHNSON.