Feb. 23, 1932. H. W. LORMOR 1,846,526

BATTERY HANDLING DEVICE

Filed Sept. 9, 1930

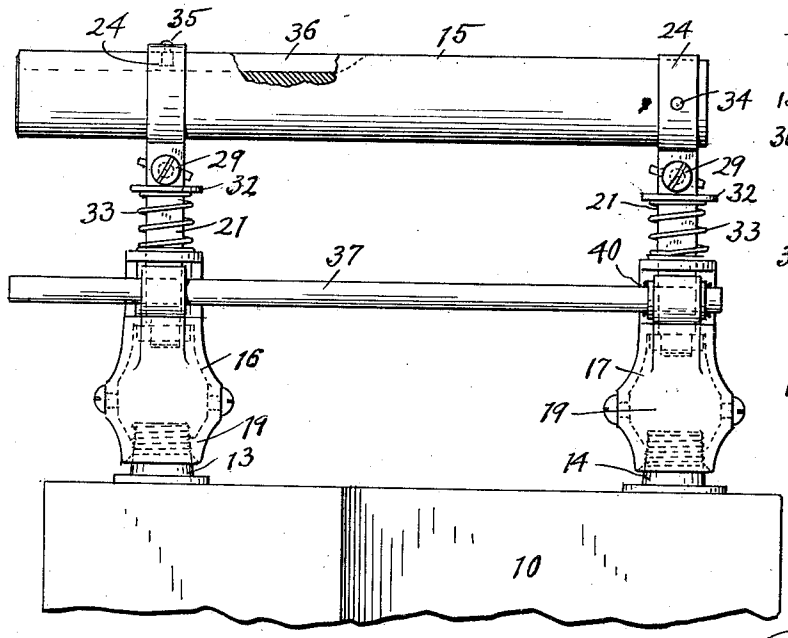

Fig. 1.

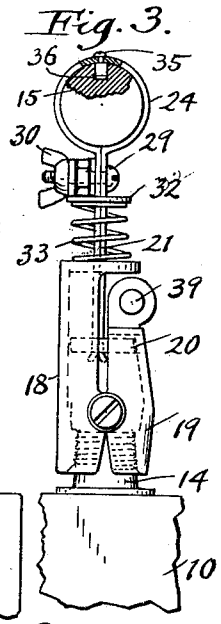

Fig. 3.

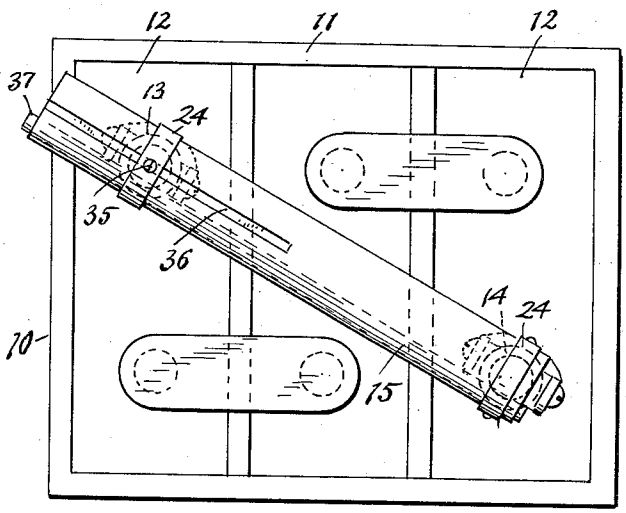

Fig. 2.

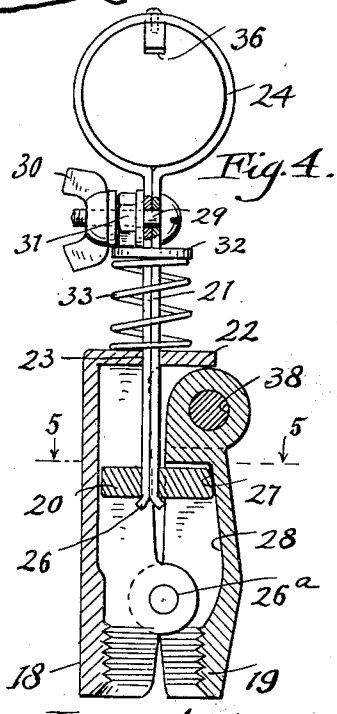

Fig. 4.

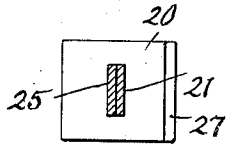

Fig. 5.

Inventor
Henry W. Lormor.
Kerr Hudson & Kent
attys.

Patented Feb. 23, 1932 1,846,526

UNITED STATES PATENT OFFICE

HENRY W. LORMOR, OF CLEVELAND HEIGHTS, OHIO, ASSIGNOR TO WILLARD STORAGE BATTERY COMPANY, OF CLEVELAND, OHIO, A CORPORATION OF OHIO

BATTERY HANDLING DEVICE

Application filed September 9, 1930. Serial No. 480,673.

This invention relates generally to article handling devices and more particularly to a storage battery lifting device.

The boxes of storage batteries according to the present day form of construction are not provided with lifting handles, but are usually provided only with finger holes or recesses. Such finger holes or recesses afford a suitable means for handling batteries where only lifting or carrying is involved, but when batteries are to be lowered into or removed from battery compartments, crates or vehicle cradles, such finger holes or recesses are inadequate.

It is therefore an object of the present invention to provide an improved form of article handling device.

Another object of the invention is to provide a device of the character referred to which is simple in construction, efficient in operation and inexpensive to manufacture.

With the objects above indicated and other objects explained in view, the invention consists in the construction and combination of elements hereinafter described and claimed.

Referring to the drawings:—

Figure 1 is a side elevational view of a handling device embodying the present invention.

Fig. 2 is a top plan view of the device.

Fig. 3 is an end elevational view of the device.

Fig. 4 is a transverse sectional view of one of the gripping jaws.

Fig. 5 is a view taken on line 5—5 of Fig. 4.

In the drawings to which I shall now refer in detail, I have shown a storage battery handling or lifting device as an embodiment of my invention. The storage battery 10 represents a battery of conventional form having a battery box or casing 11 in which are arranged the cells or units 12. Adjacent the ends of the box the usual negative terminal 13 and positive terminal 14 project above the top surface of the cells substantially on a diagonal line of the box.

The handling device is shown in engagement with these terminals and comprises a substantially horizontally extending handle preferably of wood such as maple, having terminal engaging clamps 16 and 17 connected thereto adjacent its opposite ends. The clamps 16 and 17 are substantially identical in construction and each comprises a pair of cooperative jaws 18 and 19. These jaws are hingedly connected together intermediate their ends so that when their upper ends are wedged apart by the tapered head 20 of the actuating member 21, the jaws 18 and 19 will be moved toward each other into clamping engagement with their respective terminals. The clamps 16 and 17 are connected to the handle 15 by means of the actuating members 21 so that when a lifting force is applied to the handle the jaws of the clamps are moved into clamping engagement with the terminals of the battery to which the device has been applied.

The jaw 18 has a laterally extending flange 22 adjacent its upper end which extends inwardly and is provided with a transverse elongated opening 23 through which the actuating member 21 extends. This actuating member 21 consists of a strip of metal looped at 24 to encircle the handle 15, the free ends extending through an elongated opening 25 in the cam 20 and being spread apart at 26 to secure the lower end of the operating member 21 to the cam.

Only the jaw 19 moves about the axis of the pivot 26 and consequently the cam 20 is provided with only one tapered surface 27 which engages with an inwardly and upwardly tapering surface 28 provided upon the inside of the jaw 19.

The loop 24 of the actuating member 21 is rigidly held in engagement with the handle 15 by means of a bolt 29 and a wing nut 30 disposed upon the opposite side of the actuating member 21. There is also provided a suitable spacer or washer 31 between the wing nut and the adjacent side of the actuating member 21. Directly beneath the bolt 29 and slidable upon the actuating member 21 is a washer 32, the upper surface of which abuts the spacer 31 while between the under-surface of the washer and the upper-surface of the lateral extension 22 there is disposed a coil spring 33 which normally surrounds the

actuating member 21. It will be noted therefore, that the function of this spring 33 is to normally maintain the cam 21 in its upmost position wherein the jaws 18 and 19 are maintained in gripping condition.

The clamp 17 which is preferably for engagement with the positive terminal of the battery is secured to one end of the handle 15 by means of a pin 34, while the clamp 16 is slidably mounted upon the opposite end of the handle 15 and guided longitudinally in its movement by means of a screw 35 whose end is disposed within a longitudinally extending groove 36 preferably provided in the upper surface of the handle 15. This clamp 16 which is preferably adapted to engage the negative terminal of the battery is adjusted by means of loosening the wing nut 30 and sliding the looped portion 24 along the handle 15, the purpose being to provide relative adjustment between the clamp 16 and the clamp 17 so that the spacing of the clamps will correspond with the spacing of the terminals of the battery to which the handling device is to be applied.

In the operation of the device a lifting force applied to the handle 15 causes the jaws 18 and 19 to be moved into engagement with the terminals 13 and 14 and from the construction and the arrangement of the parts it will be readily seen that the greater the lifting force may be, the greater will be the clamping engagement of the jaws with the terminals. Therefore, after the jaws have been moved into engagement with the terminals by the force which is applied in lifting a battery, it is necessary to release the jaws before the handling device can be removed from the battery. For releasing the jaws 18 and 19 I provide a releasing member 37 preferably of steel which is spaced from the handle 15 a convenient distance so that it may be readily actuated by the fingers of the hand which grasps the handle of the device. This releasing member may be constructed and arranged in any convenient manner, but as illustrated in the drawings it comprises a substantially horizontally extending rod supported in transverse openings 38 and 39 at the upper portions of the jaws 19 of the clamp 16 and 17 respectively. One end of the releasing member is rigidly mounted within a bushing 40 secured in the opening 39 of the clamp 17 to suitably insulate the rod from the clamp, while the opposite end of the rod is slidably disposed within the opening 38 of the clamp 16. When adjustments are made to vary the spacing between the clamps 16 and 17 the rod of the releasing member 37 slides through the opening 38 in the jaw 19 so that this member will have operative connection with the jaws of each clamp for all desired adjustments of the device.

While I have described the preferred embodiment of the invention it is to be understood that I am not to be limited thereto inasmuch as changes and modifications may be resorted to without departing from the spirit of the invention as defined in the appended claims.

Having thus described my invention, I claim:

1. In a device of the character described, a pair of clamps having cooperating jaws, one of said jaws being rigid and the other being pivotally connected thereto, and a handle member having portions engaging said pivoted jaws to move the latter toward said rigid jaws.

2. In a device of the character described, a pair of clamps having cooperating jaws, one of said jaws being rigid and the other being pivotally connected, a handle member having portions engaging said pivoted jaws to move the latter toward said rigid jaws, and means normally urging said jaws toward each other into work engaging position.

3. In a device of the character described, a pair of clamps having cooperating jaws, one of said jaws being rigid and the other being pivotally connected thereto, means having portions engaging said pivoted jaws to move the latter toward said rigid jaws, means normally urging said jaws toward each other into work engaging position, and manually operated means for moving said jaws away from each other.

4. In a device of the character described, a pair of clamps having cooperating jaws, one of said jaws being rigid and the other being pivotally connected thereto, means having portions engaging said pivoted jaws to move the latter toward said rigid jaws, and means normally maintaining said portions in engagement with said pivoted jaws to thereby urge said jaws into work engaging position.

5. In a device of the character described, a pair of clamps having cooperating jaws, one of said jaws being rigid and the other being pivotally connected thereto, actuating members slidably mounted on said rigid jaws and having portions engageable with said pivoted jaws whereby movement of said members in one direction urges said jaws into work engaging position, and means connecting said actuating members.

6. In a device of the character described, a pair of clamps having cooperating jaws, one of said jaws being rigid and the other being pivotally connected thereto, actuating members slidably mounted on said rigid jaws and having portions engageable with said pivoted jaws whereby movement of said members in one direction urges said jaws into work engaging position, and resilient means normally maintaining said jaws in work engaging position.

7. In a device of the character described, a pair of clamps having cooperating jaws,

one of said jaws being rigid and the other being pivotally connected thereto, actuating members slidably mounted on said rigid jaws and having portions engageable with said pivoted jaws whereby movement of said members in one direction urges said jaws into work engaging position, and manually operated means for moving said pivoted jaws to work releasing position.

8. In a device of the character described, a pair of clamps having cooperating jaws, one of said jaws being rigid and the other being pivotally connected thereto, actuating members slidably mounted on said rigid jaws and having portions engageable with said pivoted jaws whereby movement of said members in one direction urges said jaws into work engaging position, resilient means normally maintaining said jaws in work engaging position, and manually operated means for moving said pivoted jaws to work releasing position.

9. In a device of the character described, a pair of clamps having cooperating jaws, one of said jaws being rigid and the other being pivotally connected thereto, actuating members slidably mounted on said rigid jaws and having portions engageable with said pivoted jaws whereby movement of said members in one direction urges said jaws into work engaging position, springs encircling said members and normally maintaining said jaws in work engaging position, manually operated means for moving said pivoted jaws to work releasing position and insulated from one of said jaws, and an insulating member connecting said actuating members.

10. In a device of the character described, a pair of clamps having cooperating jaws, one of said jaws being rigid and the other being pivotally connected thereto, actuating members slidably mounted on said rigid jaws and having portions engageable with said pivoted jaws whereby movement of said members in one direction urges said jaws into work engaging position, springs encircling said members and normally maintaining said jaws in work engaging position, manually operated means for moving said pivoted jaws to work releasing position and insulated from one of said jaws, and an insulating member connecting said actuating members, one of said actuating members being adjustably mounted thereon.

11. A clamping device comprising a pair of jaw members, one of which is rigid and the other pivotally connected thereto, an actuating member carried by said rigid jaw member and having a portion engageable with said pivoted jaw member whereby movement of said actuating member in one direction causes said pivoted jaw member to move toward said rigid jaw member into work engaging position, a compression coil spring with all of its coils encircling said actuating member and normally urging said jaw members into work engaging position, and means for opening said jaws.

In testimony whereof, I hereunto affix my signature.

HENRY W. LORMOR.