Feb. 23, 1926. 1,574,187

C. S. CRICKMER

SWIVEL JOINT

Filed May 15, 1924 2 Sheets-Sheet 1

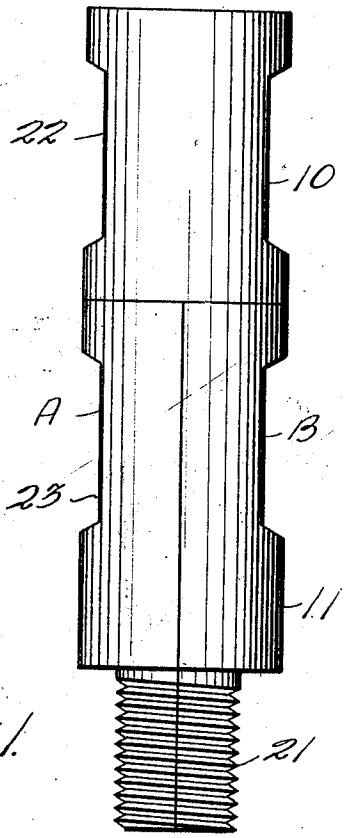

Fig. 1.

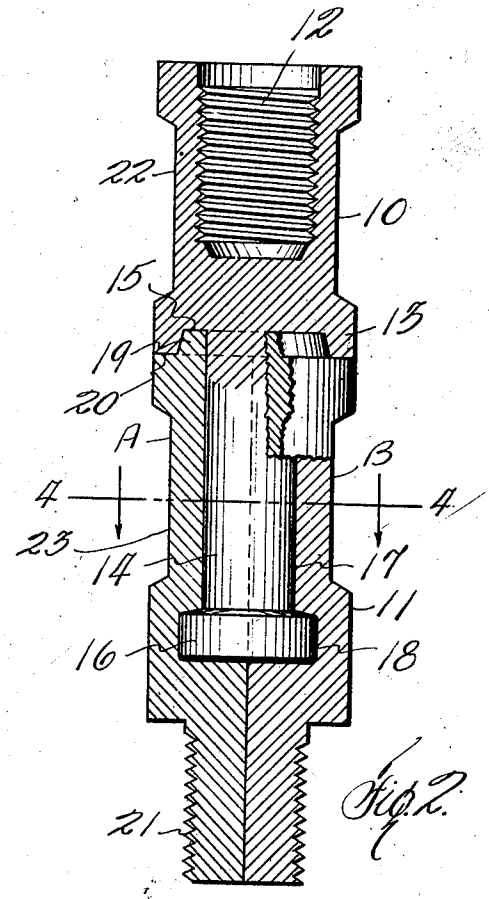

Fig. 2.

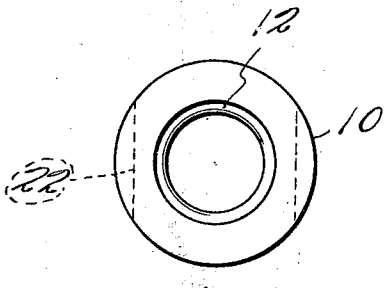

Fig. 3.

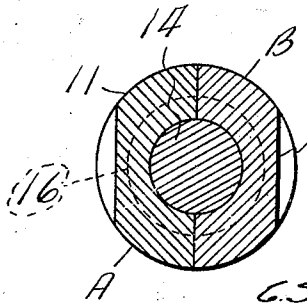

Fig. 4.

Inventor
C. S. Crickmer

By Jack A. Schley

Attorney

Feb. 23, 1926.

1,574,187

C. S. CRICKMER

SWIVEL JOINT

Filed May 15, 1924

2 Sheets-Sheet 2

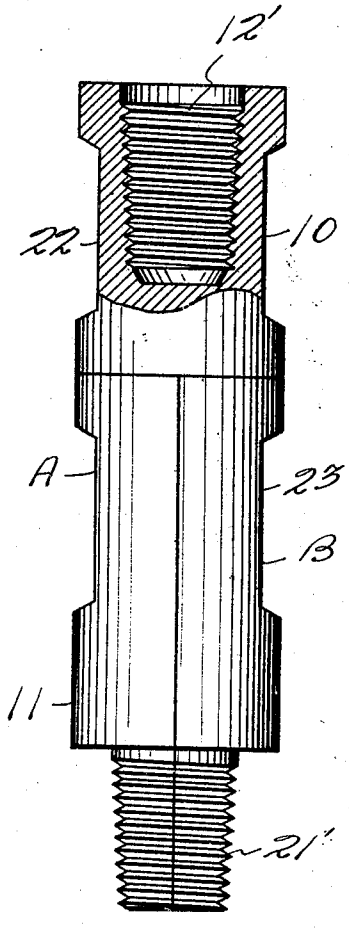

Fig. 6.

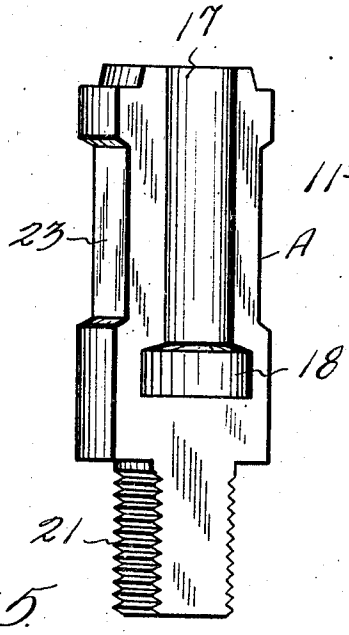

Fig. 5.

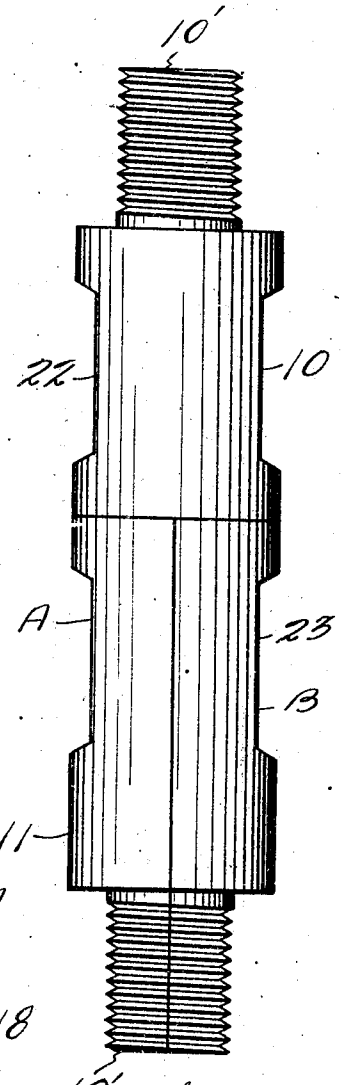

Fig. 7.

Inventor
C. S. Crickmer

By

Attorney

Patented Feb. 23, 1926. 1,574,187

UNITED STATES PATENT OFFICE.

CHARLES S. CRICKMER, OF DALLAS, TEXAS, ASSIGNOR TO THE GUIBERSON CORPORATION, OF DALLAS, TEXAS, A CORPORATION OF DELAWARE.

SWIVEL JOINT.

Application filed May 15, 1924. Serial No. 713,408.

To all whom it may concern:

Be it known that I, CHARLES S. CRICKMER, citizen of the United States of America, residing at Dallas, in the county of Dallas and State of Texas, have invented certain new and useful Improvements in Swivel Joints, of which the following is a specification.

This invention relates to new and useful improvements in swivel joints.

In sucker rods for pumps and other elongated working elements there is considerable torsional movement, which causes an undue strain and excessive wear as well as interfering with a free and easy operation.

The object of the invention is to provide a joint that may be connected in the rod or other member and which includes a swivel whereby the portions which are connected by the joint may undergo independent rotation and thus the twisting of one portion will not be communicated to the other portion.

A particular object is to provide a joint in which the swivel is formed in a simple manner and without the use of internal screw threads and nuts, and with a few number of parts.

Another object is to provide a swivel joint arranged so that its ends may be formed to couple with any style of connection, whether threaded pin or box and either tapered or straight.

A construction designed to carry out the invention will be hereinafter described together with other features of the invention.

The invention will be more readily understood from a reading of the following specification and by reference to the accompanying drawings, in which an example of the invention is shown, and wherein:

Fig. 1 is an elevation of a swivel joint constructed in accordance with my invention,

Fig. 2 is a vertical sectional view of the same,

Fig. 3 is a plan view,

Fig. 4 is a cross-sectional view on the line 4—4 of Fig. 2,

Fig. 5 is a detail of one of the sections of the lower coupling member, and

Figs. 6 and 7 are elevations of modified forms.

In the drawings the numeral 10 designates an upper coupling member and 11 a lower coupling member. In Figs. 1 to 4 I have shown the upper member formed with a box having a screw threaded socket 12. The upper member has an annular depending marginal flange 13. The inner face or periphery of the flange is bevelled. An axial shank or mandrel 14 depends from the upper member and is surrounded by an annular seat 15 contiguous to the bevelled flange 13. The mandrel has an integral collar 16 at its lower end forming a head and with its upper surface bevelled. Of course it would be possible to form the mandrel separately and attach it to the upper member in a suitable manner, likewise the collar.

One of the very important features of the invention is the lower member and its manner of engagement with the mandrel. In order to obviate nuts, bolts, screws, clamps and the like, the member is made in complementary halves or sections A and B, semicircular in cross-section. For convenience the lower member will be described as an entirety. The member 11 has an axial bore 17 in which the mandrel 14 has a turning fit. At the lower end the bore is formed with a countersunk groove 18 shaped to receive the collar 16.

At the upper end the bore is surrounded by an annular boss 19 fitting in the seat 15 and having a bevelled periphery contacting with the bevelled face of the flange 13. The boss is surrounded at its base by an outwardly directed flat shoulder 20 which bears against the bottom of the flange 13. It will be seen that the upper end of the lower member has a turning or rotating fit in and against the lower end of the upper member, so that either member has ample bearing surfaces for taking the end or longitudinal thrust.

The lower end of the lower member has a reduced screw threaded pin 21. The upper member 10 has diametrically opposite wrench faces 22; while the lower member 11 has similar faces 23. As before stated, the lower member 11 is split into two vertical sections on a diametrical vertical plane. This enables it to be assembled, whereby its boss 19 is engaged in the seat 15 and it is suspended on the mandrel 14. It will be seen that when the pin is screwed into a socket (not shown) as on the upper end of a length of sucker rod, the sections will be fastened together. This is true because the

boss prevents lateral displacement of the member. While held together the members are free to undergo independent rotation.

In Fig. 6 I have shown the upper member 10 having a tapered socket 12′, while the lower member has tapered pin 21′. In Fig. 7 I have shown the upper member provided with a pin 10′ as well as the lower member. It will be seen that the swivel joint can be made in various ways and is of simple and durable construction.

What I claim, is:

1. In a rod joint, a swivel member having a rod coupling member at one end and a mandrel at its opposite end surrounded by a flange fixed relatively to the mandrel and extending parallel to its axis to form a recess, and a cooperating member formed in separable sections and with a flange to enter the recess of the swivel member and means interlocking with said mandrel, the opposite end of said cooperating member being adapted to receive a rod coupling to prevent lateral displacement of the sections.

2. In a rod joint, a swivel member having a rod coupling at one end and a headed mandrel at its opposite end surrounded by a flange fixed relatively to the mandrel and forming an annular recess having an inclined outer wall, and a cooperating member formed in separable sections each having a flange to fit said recess and a bore terminating in an enlarged seat to receive the head of the mandrel, the opposite end of the cooperating member beyond said seat being adapted to receive a rod coupling to prevent lateral displacement of the sections.

3. A swivel joint of the character described comprising a coupling member having at one end a mandrel surrounded by a flange fixed relatively to the mandrel and extending parallel to its axis to form a recess, and a cooperating member formed in separable sections having a flange to enter the recess of the coupling member to resist lateral displacement and a bore to interlock with said mandrel, the opposite end of said cooperating member being adapted to receive a clamping coupling to retain the sections against separation.

4. A swivel joint for devices of the character described comprising an upper member, a mandrel depending from the upper member, an annular flange depending from the upper member integral with and surrounding the mandrel, a lower member composed of complementary vertical sections having an axial bore for receiving and interlocking with the mandrel, an upstanding boss in each section for engaging in the flange of the upper member to prevent lateral displacement of the sections of the lower member and coupling means for clamping the lower ends of said sections against lateral movement.

5. In a rod joint, a swivel member having a rod coupling member at one end and a mandrel at its opposite end surrounded by a flange fixed relatively to the mandrel and extending parallel to its axis to form a recess, and a cooperating member formed in separable sections and with means to enter the recess of the swivel member and means engaging with said mandrel, the opposite end of said cooperating member being adapted to receive a rod coupling to prevent lateral displacement of the sections.

6. In a rod joint, a swivel member having a rod coupling member at one end and a mandrel at its opposite end surrounded by a wall fixed relatively to the mandrel to provide a recess, and a cooperating member formed in separable sections embracing said mandrel with one end disposed in said recess and the opposite end adapted to be embraced by a rod coupling to prevent lateral displacement of the sections.

In testimony whereof I affix my signature.

CHARLES S. CRICKMER.