May 17, 1966 W. J. KNOCHEL 3,252,042

PLUG-IN LIGHTING UNIT WITH INTEGRAL CONTACTOR-HOLDING-AND-INSULATING MEANS

Filed April 16, 1962

FIG. 1.

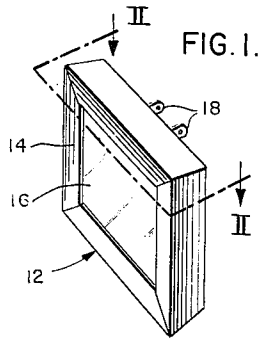

FIG. 2.

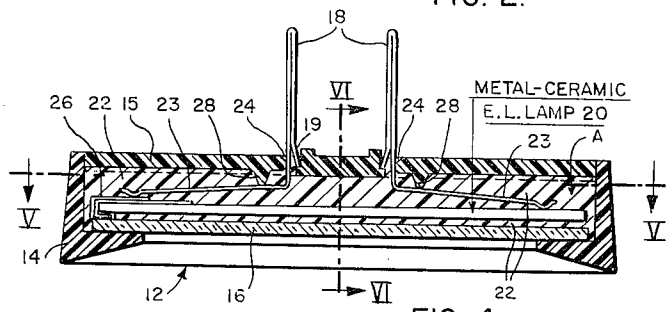

FIG. 3.

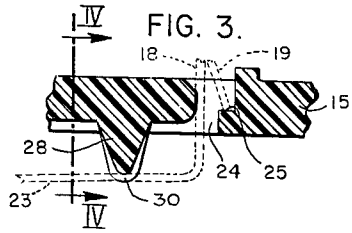

FIG. 4.

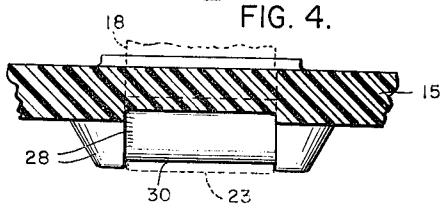

FIG. 5.

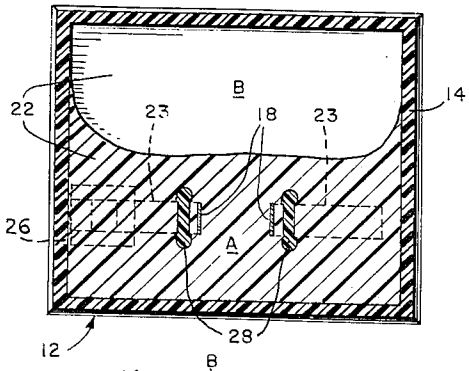

FIG. 6.

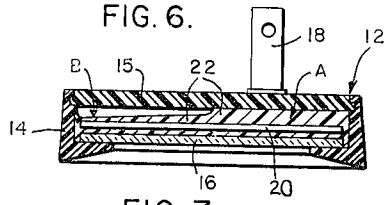

FIG. 7.

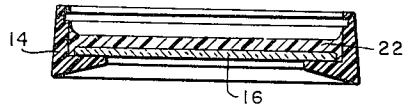

FIG. 8.

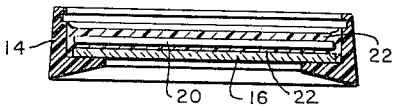

FIG. 9.

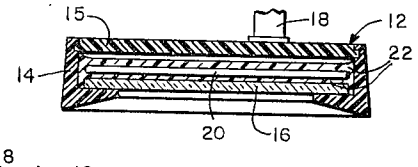

FIG. 10.

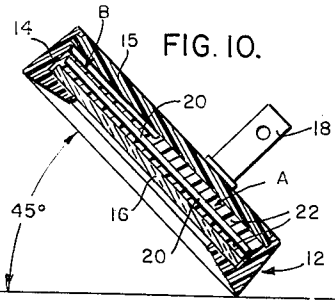

FIG. 11.

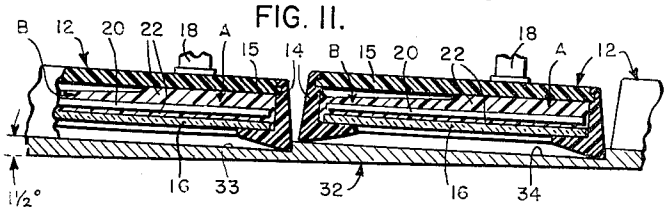

INVENTOR.
WILLIAM J. KNOCHEL.
BY D. S. Bulger
AGENT.

United States Patent Office 3,252,042 Patented May 17, 1966

3,252,042

PLUG-IN LIGHTING UNIT WITH INTEGRAL CONTACTOR-HOLDING-AND-INSULATING MEANS

William J. Knochel, West Orange, N.J., assignor to Westinghouse Electric Corporation, East Pittsburgh, Pa., a corporation of Pennsylvania

Filed Apr. 16, 1962, Ser. No. 187,836
6 Claims. (Cl. 313—324)

This invention relates to lighting devices and, more specifically, to an improved lighting unit that can be safely operated directly from an electrical outlet and readily manufactured.

There have recently been developed and marketed lighting units which contain electroluminescent light sources and that can be plugged directly into a wall socket and used as a safety or night light for example. Since the light output of electroluminescent phosphors depreciates rapidly in the presence of gaseous impurities, especially water vapor, it is the general practice to protect the electroluminescent lamp from the atmosphere with a moisture-impervious coating such as a layer of glass or thermosetting resin or the like. A lighting unit of this type wherein epoxy resin is used as the protective overcoat and is also employed to seal the electroluminescent lamp in a plastic casing or frame is disclosed and claimed in copending U.S. application Serial No. 825,961 (now U.S. Patent No. 3,056,898), of William J. Knochel and Elmer M. Schneider, filed July 9, 1959, and assigned to the assignee of the present invention.

Since such lighting units are connected to and operated directly from the power line it is desirable that they be as safe as possible as regards fire and electrical shock, particularly in those cases where the casing or frame in which the lamp is mounted is made from a thermoplastic resin such as polystyrene or the like.

It is accordingly the general object of the present invention to provide an improved plug-in lighting unit that meets all of the safety requirements established for such devices.

Another and more specific object is the provision of a plug-in electroluminescent lighting unit that is rugged, of simple construction and has built-in safeguards against fire and electrical shock.

The foregoing objects and other advantages which will become apparent are achieved in accordance with this invention by employing a specially constructed casing and contactor assembly that automatically causes preselected portions of the contactors to be depressed into the casing when the unit is assembled. A predetermined quantity of flame-retardant thermosetting plastic such as epoxy resin is introduced into the casing before the latter is closed and is subsequently made to flow over the lamp contacts and the depressed portions of the contactor members before it solidifies by tilting the assembled unit in a predetermined direction through a predetermined angle. The laterally extending depressed portions of the contactors are thus completely encased in the resin, when it solidifies, and constitute integral insulated parts of the lamp structure itself. The present invention accordingly constitutes an improvement over the invention disclosed and claimed in the aforementioned copending application Serial No. 825,961 of W. J. Knochel et al.

A better understanding of the invention will be obtained from the accompanying drawing, wherein:

FIGURE 1 is a perspective view of an electroluminescent plug-in lighting unit that incorporates the present invention;

FIG. 2 is an enlarged cross-sectional view along the reference line II—II of FIG. 1, in the direction of the arrows;

FIG. 3 is an enlarged fragmentary sectional view of the apertured portion of the closure panel of the casing and the projection thereat that depresses the associated contactor member;

FIG. 4 is a cross-sectional view along the reference line IV—IV of FIG. 3, in the direction of the arrows;

FIG. 5 is a horizontal sectional view through the assembled unit along the line V—V of FIG. 2 and shows the coated back of the lamp component;

FIG. 6 is a vertical sectional view through the center of the lighting unit along the reference line VI—VI of FIG. 2; and

FIGS. 7 to 11 are sectional views corresponding to FIG. 6 but illustrating various phases of the assembly operation.

While the present invention may be advantageously used in various kinds of devices where maximum protection against electrical shock and fire are desirable, it is particularly suited for use in conjunction with plug-in type electroluminescent safety lights or the like and has accordingly been so illustrated and will be so described

General construction

Considering the drawing in detail, in FIG. 1 there is shown an electroluminescent lighting unit **12** of rectangular configuration that is constructed in accordance with this invention. The unit comprises, in general, a plastic frame **14** that is open at the back and has a front window that is covered with a protective glass **16**. The frame contains a planar electroluminescent lamp **20** (see FIG. 2) that connects with plug-in terminals **18** which protrude from the back of the unit.

As shown more particularly in FIG. 2, the protective glass **16** is seated behind the rim of the frame **14** and the latter is closed at the back by a plastic panel **15** which snap-interlocks with the sides of the frame. When thus assembled the frame and closure panel constitute a casing that contains the electroluminescent lamp **20**. As indicated in FIG. 2, the lamp **20** is preferably of the so-called "metal-ceramic" type and consists of the usual metal base plate and overlying layer of phosphor-impregnated glass and a light-transmitting electrode (not shown). Such lamps and the manner in which they are fabricated and operate are well-known in the art and accordingly need not be described here.

Electrical connection with the lamp component **20** is effected by means of generally L-shaped contactor members, such as metal prongs, having laterally extending leg portions **23** that are located within the casing and are compressed by the closure panel against the lamp contacts. One of the contactor members engages the metal base plate of the lamp while the other connects with an insulated jumper clip **26** (see FIG. 2) that extends around one edge of the lamp and engages the light-transmitting electrode on the opposite face thereof. The upstanding leg portions of the L-shaped contactor members extend through apertures **24** in the closure panel **15** and are spaced approximately ½" apart to provide rigid terminals **18** that can be plugged into an electrical outlet. The exposed ends of the contactor members are preferably bent back upon themselves and the tips flared slightly to provide tongues **19** that seat against ledges **25** (see FIG. 3) located within the apertures **24** in the closure panel **15**. When the laterally extending leg portions **23** of the contactor prongs are resiliently compressed against the electroluminescent lamp **20** the resulting spring interaction between the tongues and the ledges securely lock the plug-in terminals **18** in upstanding position. The back of the lamp **20** is covered with a layer **22** of thermosetting plastic such as epoxy resin.

A detailed description of an electroluminescent lighting unit of this general character is given in the aforementioned copending U.S. application of Knochel et al. If desired, the lamp component **20** can be of the so-called "glass-plastic" construction, as disclosed in the aforesaid copending application.

The invention

The desired additional protection against electrical shock and fire hazard is accomplished according to this invention by completely embedding the laterally extending portions **23** of the contactor members within the layer **22** of non-inflammable plastic. This is conveniently and automatically accomplished during assembly of the unit **12** by providing rib-liked projections **28** on the inner surface of the closure panel **15** that sharply depress the aforesaid arm portions toward the lamp component **20** when the panel is attached to the back of the frame **14**, as shown in FIG. 2. These projections are located adjacent the apertures **24** in the panel and outwardly thereof so that they engage the laterally-extending arm portions **23** very close to the bend that joins them with the upstanding terminal portions **18**.

As shown more particularly in FIGS. 3 and 4, the rib-like projections **28** comprise integral parts of the closure panel **15** and are provided with a recess **30** that extends from one side of the projections, around the tip or crown thereof and down the other side. These recesses **30** are so dimensioned that the laterally extending arm portions **23** of the contactor members nestingly seat therein when the closure panel is snapped into the back of the frame. The laterally extending arm portions **23** are, accordingly, automatically oriented in the proper position to engage the lamp contacts and are also spaced a predetermined distance inwardly from the inner surface of the closure panel **15** by the projections **28** when the unit is assembled.

As shown in FIGS. 5 and 6, the thickness of the thermosetting flame-retardant plastic layer **22** is much greater in the region "A" which overlies the lamp contacts and the connecting laterally extending arm portions of the contactor members than it is in the region "B" which extends over the remaining portion of the lamp. In other words, the thickness of the thermosetting plastic layer **22** is so controlled according to the invention that it is greatest in the region "A" overlying the laterally-extending arm portions **23** of the contactor members so that these portions of the contactors and the lamp contacts are completely encased in plastic. Preferably, the plastic material completely fills the space between the lamp component **20** and the closure panel **15** in the region "A" which contains the electrical connecting elements, as shown in FIGS. 2 and 6.

Thus, by virtue of the depressing action of the projections **28** and the thickening of the plastic layer **22** in accordance with this invention, the laterally extending arm portions **23** are completely encased in a thermosetting non-inflammable material and constitute integral parts of the lamp structure itself.

Controlling the thickness of the plastic layer **22** in this manner also affords the additional advantage of achieving the total embedment of the contactor arm portions located within the casing with a minimum amount of plastic material.

Method of assembly

A preferred method of assembling the lighting unit **12** on a mass production basis and effecting the desired build-up of the plastic material **22** in a preselected region is illustrated in FIGS. 7 to 11.

The initial step is shown in FIG. 7 and comprises placing the glass cover **16** into the frame **14** and preferably cementing it therein. A predetermined quantity of unpolymerized non-inflammable resin **22** such as epoxy or the like is then dispensed into the resulting enclosure. The amount of epoxy dispensed into the frame is such that only about half of the compartment that will subsequently house the lamp component **20** is filled.

The electroluminescent lamp **20** is then placed into the frame, as shown in FIG. 8, and is completely immersed in the epoxy resin **22**. As shown, a thin film of resin remains entrapped between the lamp **20** and the glass plate **16** so that the lamp is completely encased in plastic. The present construction accordingly is different in this respect from that described in the aforementioned copending application of Knochel et al. where the epoxy layer extended over only the back and sides of the electroluminescent lamp.

After the lamp has been inserted, the closure panel **15** and the contactor members inserted therein is snapped or otherwise attached to the back of the frame **14**, as shown in FIG. 9. The assembled lighting unit **12** is then immediately tilted upwardly at an angle of approximately 45° from the horizontal in the proper direction to allow the unpolymerized epoxy resin to flow toward and into the region A and thus completely cover the laterally extending arm portions **23** of the contactor members and the lamp contacts, as shown in FIG. 10. The unit **12** is held on edge in this tilted position for a period of about 10 seconds or so, depending upon the viscosity of the uncured resin. Since the plug-in terminals **18** are desirably located slightly off-center with respect to the closure panel **15** to allow two such units to be inserted into a duplex outlet, the edge of the unit closest to and in line with the terminals will be pointed downwardly in the case here illustrated to achieve the desired buildup of the plastic resin within the casing.

After the unit **12** has been held on edge for the prescribed time, it is placed on a horizontally disposed rack **32** the upper surface whereof is contoured to provide a series of steps **33, 34** that are inclined at approximately 1½° to 3° from the horizontal. Each of the steps are dimensioned to accommodate one of the lighting units so that a plurality of such units may be temporarily stored in this fasihon until the epoxy resin solidifies. As shown, the lighting units **12** are placed onto the rack in such a position that the edge of the casing that was lowermost during the initial tilting operation remains in the same relative position. Because of the marked reduction in the angle of tilt the resin will slowly flow back toward the region "B" but the angle of tilt is such that enough resin remains in region "A" to completely embed the contactor members.

The frame **14** and glass cover **16**, accordingly, merely constitute a mold, so to speak, for the resin while it is in the unpolymerized state so that the lamp **20** and contactor members are permanently attached to one another by the resin, when the latter is cured, and comprise a monolithic structure.

It will be apparent from the foregoing that the objects of the invention have been achieved insofar as the portions of the lighting unit that represents a possible shock or fire hazard have been completely embedded in thermosetting flame-retardant plastic material. Thus, even if the casing were fabricated from thermoplastic resin such as polystyrene or the like any danger that live electrical parts could be exposed is completely obviated since the parts are embedded in non-inflammable thermosetting material and constitute integral portions of the lamp structure.

While a preferred embodiment has been illustrated and described in detail, various modifications in both the construction and the arrangement of the various components are possible and can thus be made without departing from the spirit and scope of the invention.

I claim as my invention:

1. In a lighting unit comprising a planar light source that is mounted in a casing and has a contact that is accessible through an opening in said casing, the combination of a closure member secured to said casing and extending across the opening therein, an elongated contactor member secured to said closure member and extending laterally within said casing to said light source

contact, a projection on the inner surface of said closure member depressing the laterally extending portion of said contactor member and pressing a part thereof against the light source contact, and a layer of cured thermosetting resin on said light source overlying and completely enclosing said contact and the depressed laterally extending portion of said contactor member so that the latter constitutes an integral insulated part of said light source.

2. The combination as set forth in claim 1 wherein said layer of cured thermosetting resin is non-inflammable.

3. In a lighting unit comprising a planar electroluminescent lamp that is mounted in a plastic casing and has a pair of spaced contacts that are accessible through an opening at the back of said casing, the combination of a plastic panel secured to and closing the back of said casing, a pair of elongated contactor members secured to said panel and having portions that extend laterally within said casing to said lamp contacts, a pair of rib-like projections on the inner surface of said closure panel depressing the laterally extending portions of said contactor members and pressing the free ends thereof against the respective lamp contacts, and a layer of cured thermosetting non-inflammable resin covering the back of said electroluminescent lamp and completely encasing the depressed laterally extending portions of said contactor members so that the latter constitute integral insulated parts of said lamp.

4. The combination as set forth in claim 3 wherein, each of said contactor members comprise a generally L-shaped metal prong having an upstanding leg portion

and a laterally extending leg portion, the upstanding leg portions of said prongs extend through a pair of apertures in said closure panel and serve as plug-in terminals for said lighting unit, said rib-like projections are located adjacent the respective apertures in said panel, and the depressed laterally extending leg portions of said metal prongs are nestingly seated in recesses provided in the tips of said projections.

5. The combination as set forth in claim 3 wherein the thickness of the layer of cured thermosetting resin is greatest in the region overlying said lamp contacts and the depressed laterally extending portions of said contactor members.

6. The combination as set forth in claim 3 wherein, the thickness of the layer of cured thermosetting resin is greatest in the region overlying said lamp contacts and the depressed laterally extending portions of said contactor members, and said layer extends around the sides and front of said lamp and thus completely envelopes the latter.

References Cited by the Examiner

UNITED STATES PATENTS

3,056,897	10/1962	Knochel et al.
3,056,898	10/1962	Knochel et al.

GEORGE N. WESTBY, *Primary Examiner.*

C. R. CAMPBELL, *Assistant Examiner.*