Dec. 1, 1936. A. J. MAY 2,062,592

HEADREST SUPPORTING MEANS

Filed Sept. 28, 1934 2 Sheets-Sheet 1

Fig. 1

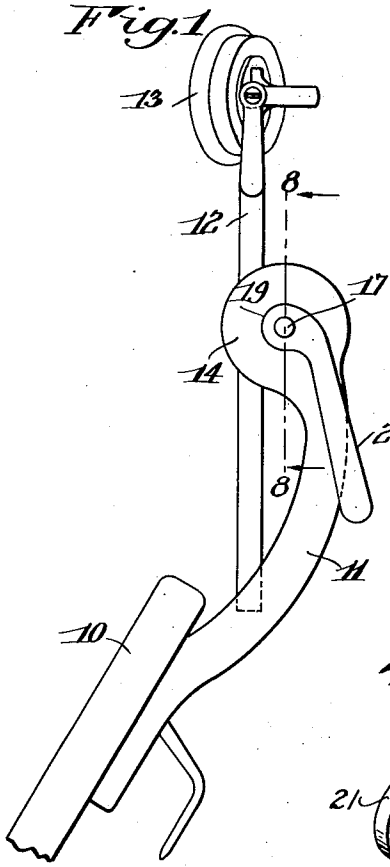

Fig. 2

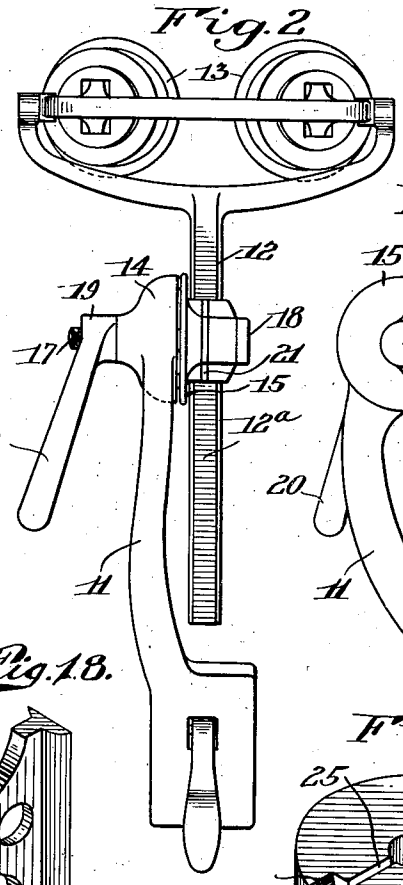

Fig. 3

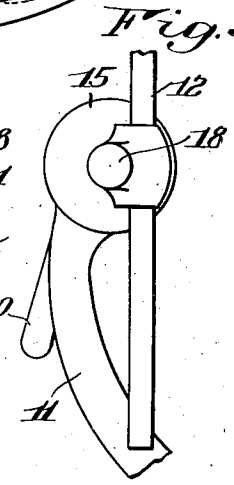

Fig. 18.

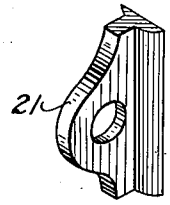

Fig. 6

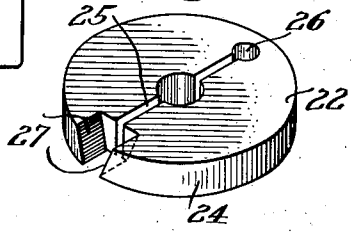

Fig. 4

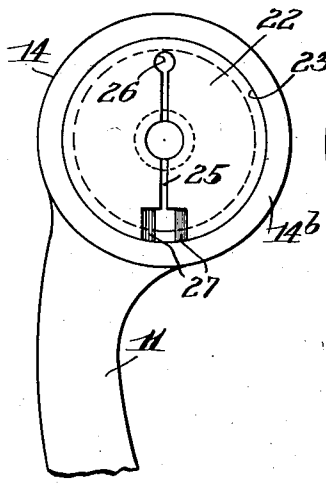

Fig. 5

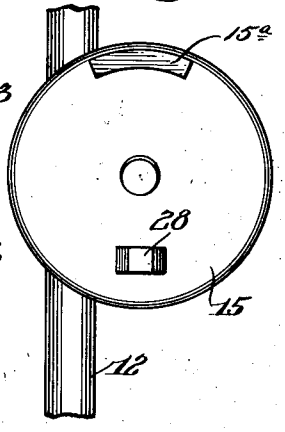

Fig. 7

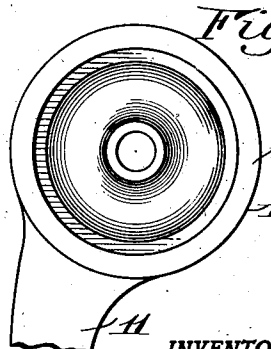

INVENTOR
Adam J. May
BY Edward L. Cumpston
his ATTORNEY

Dec. 1, 1936. A. J. MAY 2,062,592

HEADREST SUPPORTING MEANS

Filed Sept. 28, 1934 2 Sheets-Sheet 2

Fig. 8

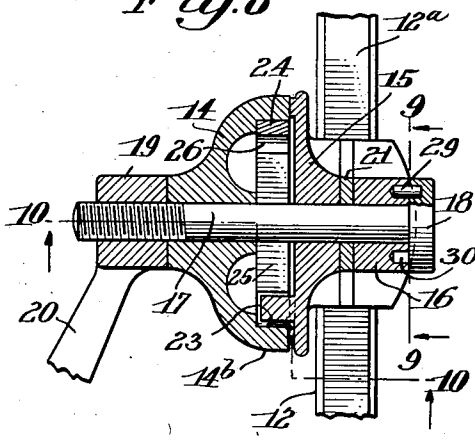

Fig. 9

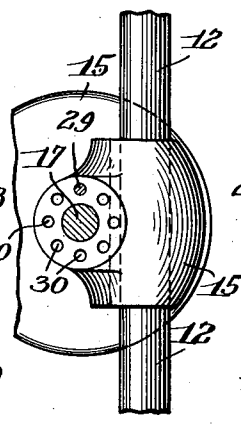

Fig. 10

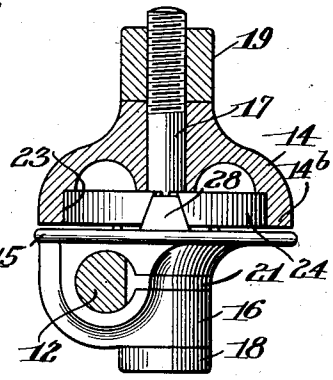

Fig. 11

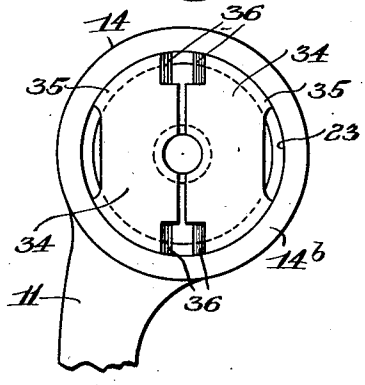

Fig. 12

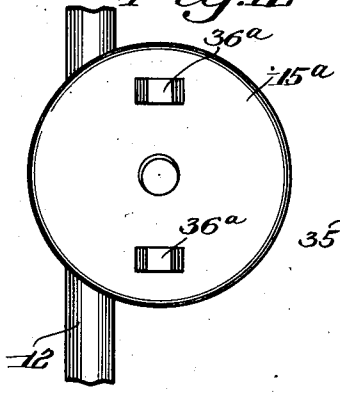

Fig. 13

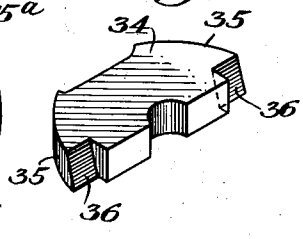

Fig. 14

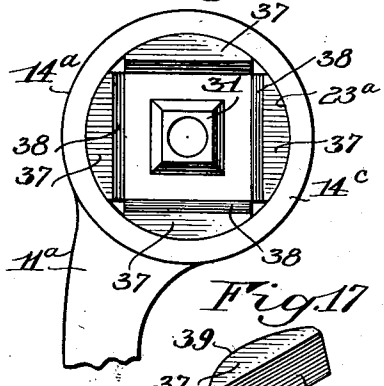

Fig. 15

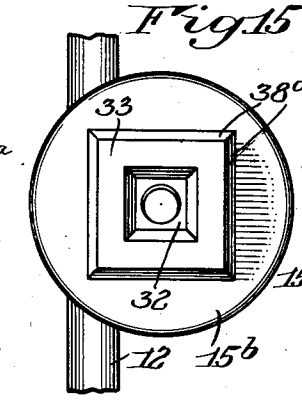

Fig. 16

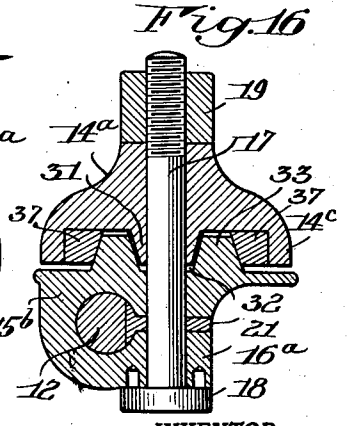

Fig. 17

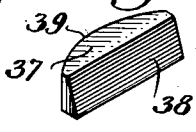

INVENTOR
Adam J. May
BY Edward H. Dumpston
his ATTORNEY

Patented Dec. 1, 1936

2,062,592

UNITED STATES PATENT OFFICE

2,062,592

HEADREST SUPPORTING MEANS

Adam J. May, Rochester, N. Y., assignor to Ritter Dental Manufacturing Company, Inc., Rochester, N. Y., a corporation of Delaware

Application September 28, 1934, Serial No. 745,964

2 Claims. (Cl. 155—177)

The present invention relates to a head rest supporting structure of the variety adapted for use with chairs and more particularly with dental and other operating chairs for supporting the head of the patient, one object of the invention being to provide a practical and efficient structure of this class capable of being readily and conveniently adjusted to different head supporting positions and securely held in said different positions.

A further object of the invention is to provide a head rest supporting structure having simplified means by which different supporting parts therefor are mounted for relative rotation and in which improved means is provided for frictionally holding said parts at different operating positions.

A further object of the invention is to provide in a head rest supporting structure of the class described, an efficient clamping joint embodying improved expansible means for frictionally holding one or more head supporting parts at different positions of adjustment.

A further object of the invention is to provide in a head rest supporting structure an improved clamping joint having a double clamping action for different relatively adjustable members under the control of a single operating part.

A further object of the invention is to provide a simplified, compact structure affording improved clamping means having relatively few parts which can be economically manufactured and which will effectively retain the supporting parts associated therewith.

To these and other ends the invention resides in certain improvements and combinations of parts, all as will be hereinafter more fully described, the novel features being pointed out in the claims at the end of the specification.

In the drawings:

Fig. 1 is a side elevation of a supporting structure embodying one form of the invention;

Fig. 2 is a rear view of the same;

Fig. 3 is a fragmentary view in elevation as viewed from the right of Fig. 2 showing the swivel head and the head rest supporting rod carried thereby;

Fig. 4 is a detailed view of the supporting head showing the expansible friction disk seated therein;

Fig. 5 is a view in elevation of the swivel head having a part for expanding the disk within the supporting head;

Fig. 6 is a detailed perspective view of the expansible friction disk;

Fig. 7 is a detailed view of the supporting head with the disk removed therefrom;

Fig. 8 is a sectional elevation taken on line 8—8 of Fig. 1;

Fig. 9 is a sectional elevation on line 9—9 of Fig. 8;

Fig. 10 is a sectional elevation on line 10—10 of Fig. 8;

Fig. 11 is a detailed view of a supporting head similar to that shown in Fig. 4 provided with a modified form of friction holding means;

Fig. 12 is a detailed view of a modified swivel head for cooperation with the supporting head and friction holding members shown in Fig. 11;

Fig. 13 is a perspective view of one of the friction holding members shown in Fig. 11;

Fig. 14 is a detailed view of a supporting head similar to that shown in Figs. 4 and 11 provided with a plurality of modified friction holding members;

Fig. 15 is a detailed view of a swivel head for cooperation with the supporting head and friction members shown in Fig. 14;

Fig. 16 is a horizontal section showing the parts indicated in Figs. 14 and 15 in assembled relation,

Fig. 17 is a perspective view of one of the friction holding members shown in Fig. 14, and

Fig. 18 is a view showing a part detached.

The same reference numerals throughout the several views indicate the same parts.

Referring to the drawings, 10 represents a portion of the back of a dental or other chair to which is attached by any suitable means a member which may be termed the main or primary support 11, preferably comprising a rod-like member having means described hereinafter for supporting a secondary rod 12 or other suitable support for the head rest pads 13 shown in Figs. 1 and 2.

The support 11 has a recessed head 14 fixed thereon, associated with which is a swivel head 15 slotted to provide a yieldable clamping jaw 16 for movement by a bolt 17 extending through the swivel head and also through the supporting head 14 as best shown in Figs. 8 and 10. The bolt is provided with a head 18 and a nut 19 having an operating handle 20 for tightening the nut whereby the bolt will operate to move the jaw 16 inwardly to clamp the head rest supporting member 12 in the desired position of adjustment while operating at the same time to move the supporting and swivel heads one toward another to operate the friction holding parts as described hereinafter.

Loosely inserted within the slot of the swivel head 15 is a locking member 21 preferably of T-shaped construction which engages the flattened surface 12a of the head rest support 12 to prevent turning of the latter within the head. The locking member is held in position by the bolt 17 which extends therethrough. The thickness of the locking member is slightly less than the width of the slot in order to provide sufficient clearance for the necessary movement of the clamping jaw 16 when the latter is moved to clamping position on the head rest support 12 upon tightening the nut on the bolt.

In the arrangement shown in Figs. 1 to 10, inclusive, the means for frictionally holding the swivel head in the desired position of adjustment to which it may be rotated on the fixed head 14 comprises the expansible disk 22 shown inserted within the recess of the fixed head in Fig. 4. The outside diameter of the disk is slightly less than the inside diameter of the annular recessed portion 14b of the head, the inner bearing surface 23 of which forms a seat for the outer peripheral surface 24 of the disk when the latter has been expanded within the fixed head by means described hereinafter.

It will be noted that the disk is provided with a transverse slot 25 extending through its center from one edge of the disk to a point relatively close to its opposite edge, at which point the slot terminates in a somewhat enlarged opening 26, the disk being cut away at the other end of the slot to provide the oppositely inclined surfaces 27 for engagement by the oppositely inclined surfaces of the wedge 28 on the swivel head 15, as shown in Figs. 5 and 10. The swivel head when moved by the clamping bolt toward the fixed head will urge the wedge into engagement with the inclined surfaces 27 of the disk with sufficient pressure to cause the disk to expand and to urge the peripheral portion of the disk into engagement with the bearing surface 23 of the annular wall of the fixed head to hold the disk against turning within the head. This action will take place upon operating the lever 20 to tighten the clamping bolt 17. Upon loosening the bolt the pressure of the wedge against the opposite faces of the disk will be relieved so that the swivel head 15 can be readily rotated by exerting pressure on the head rest support 12 to move it and the head rest pads to the desired position relative to the patient. Furthermore by loosening the bolt the pressure on the clamping jaw 16 of the swivel head will be relieved so that the head rest support 12 and the pads thereon can be raised or lowered as desired. The swivel head 15 may be provided with a peripheral stop member 15a diametrically opposite the wedge 28, as shown in Fig. 5, to limit the axial movement of the head toward the fixed member, as seen in Fig. 8. It will be seen, therefore, that the swivel head and associated parts serve the double purpose of clamping the head rest support at the desired elevation and of expanding and clamping the friction holding disk in gripping engagement with the annular wall of the fixed head 14.

As it is desired to have the handle or lever 20 for tightening the nut on the clamping bolt occupy a position convenient to the operator when said bolt is moved to clamping position, the head of the bolt is provided with a pin 29 adapted to take into one of a plurality of openings 30 formed in the clamping jaw 16 of the swivel head 15 as shown in Figs. 8 and 9, the position of the bolt which will best correspond to the desired position of the lever being first determined and the bolt being then secured in said position by movement of the pin 29 within the proper opening 30.

In the modification shown in Figs. 11 and 12 the several parts are substantially the same as the corresponding parts shown in Figs. 8 and 9 with the exception that the friction holding members inserted within the fixed head are somewhat different from the expansible disk shown in Fig. 6.

The swivel head shown in Fig. 12 carries the same parts for supporting the head rest holding member as the swivel head shown in Figs. 8 to 10, inclusive. The parts shown in Figs. 11 and 12 which are the same as the corresponding parts shown in Figs. 8 to 10, inclusive, have been given the same reference characters.

In the modification shown in Fig. 11 a pair of suitably constructed frictional holding members 34 are inserted within the recess of the fixed head 14, each of said members having spaced portions 35 for frictionally engaging the inner bearing face 23 of the annular portion 14b of the head. The members 34 are also provided with oppositely inclined faces 36 for receiving the wedges 36a on the swivel head 15a shown in Fig. 12.

In the operation of the modified arrangement shown in Figs. 11, 12, and 13, the wedge members 36a will engage the oppositely inclined surfaces 36 of the holding members 34 to spread or expand the same outwardly upon tightening the clamping bolt 17 whereby the peripheral portions 35 of the holding members will be urged into engagement with the inner bearing surface 23 of the fixed head 14 to frictionally support the swivel head in whatever position it may have been adjusted to.

In the modifications shown in Figs. 14 to 17, inclusive, the principle of operation is the same as that of the arrangement shown in Figs. 11 to 13, inclusive, although a different number of friction holding members are provided in the two modifications. The support 11a shown in Fig. 14 and the head 14a thereon having an annular wall 14c provided with an inner bearing surface 23a is the same as the head 14 shown in Figs. 1, 2, 8, and 10, except that it is provided with a centrally located rectangular shaped boss 31 which takes into the recess 32 of a correspondingly shaped recessed boss 33 on the swivel head 15b, the boss 33 having beveled faces 38a thereon as shown in Figs. 15 and 16. The swivel head 15b has a clamping jaw 16a which is moved to clamping position upon the head rest support 12 by the bolt 17 when the nut 19 is tightened thereon.

The swivel head holding members 37 inserted within the recessed head 14a are provided with beveled faces 38 and are also provided with curved peripheral portions 39 for engagement with the inner face 23a of the annular portion 14c of the fixed head 14a as shown in Fig. 14.

In the operation of the clamping joint shown in Figs. 14 to 16, inclusive, the beveled faces 38a of the lug 33 on the swivel head 15b will engage the correspondingly beveled faces 38 of the holding members 37 to urge the peripheral portions of the latter into engagement with the bearing surface 23a of the head 14a when the bolt is moved to clamping position upon the jaw 16a of the swivel head as shown in Fig. 16.

However upon loosening the bolt the pressure

on the clamping parts will be relieved sufficiently to permit the swivel head to be rotated to any desired position of adjustment, the pressure also being relieved at the same time on the clamping jaw of the swivel head to permit the head rest support **12** to be raised or lowered as desired.

It will be noted that the principle of operation of the clamping and friction holding members of the different modifications shown is substantially the same and that in each case the holding members are expanded or moved outwardly by the wedge or wedge-like members on one of the relatively rotatable heads to urge the peripheral portions of said members into engagement with the inner peripheral bearing face of the other head within which said members are positioned.

The holding disk **22**, for example, while not embodying separate parts, has oppositely disposed portions which are moved in opposite directions by the wedge **28** when the latter is urged into engagement with the oppositely inclined faces **27** of said portions. The principal difference in this form of holding device over that embodied in the other modifications is that on expanding the disk within the head **14**, it is placed under tension by reason of the connection of said opposite portions at one point of the disk whereby said portions will tend to assume normal position when the pressure thereon is relieved by loosening the clamping bolt.

However in each of the modified forms of holding devices shown, quick release of the swivel head for rotation relative to the fixed head will be afforded upon loosening the clamping bolt by movement of the lever **20** and the nut thereon in the proper direction.

I claim:

1. A head rest supporting structure for an operating chair, comprising a support having a recessed head provided with an interiorly disposed bearing surface, a swivel head rotatably mounted thereon and movable axially toward and from the recessed head, a disk loosely arranged in said recessed head and slotted transversely to provide oppositely movable portions having peripheral surfaces for frictionally engaging said bearing surface, and also having oppositely inclined surfaces, a wedge projecting from said swivel head, means for moving the swivel head toward the recessed head to cause said wedge to engage said inclined surfaces to move said oppositely movable portions to urge said peripheral surfaces into engagement with said bearing surface and means for limiting the axial movement of the swivel head toward the recessed head.

2. A head rest supporting structure for an operating chair, comprising a support having a recessed head provided with an interiorly disposed bearing surface, a swivel head rotatably mounted thereon and movable axially toward and from the recessed head, holding means loosely arranged in said recessed head and comprising oppositely movable parts having peripheral surfaces for frictionally engaging said bearing surface and also having oppositely inclined surfaces, a wedging device fixed to and projecting from said swivel head, and means for moving the swivel head toward the recessed head to cause said wedging device to engage said inclined surfaces to move said oppositely movable parts to urge said peripheral surface into engagement with said bearing surface, said moving means including a bolt and a handle, and cooperating means between said bolt and swivel head to fixedly hold the bolt in adjusted position, whereby the handle may be threaded thereon in a predetermined selected position.

ADAM J. MAY.