Nov. 12, 1946. G. G. MEVI 2,410,989

PICTURE HOLDER

Filed April 13, 1945

Fig. 1

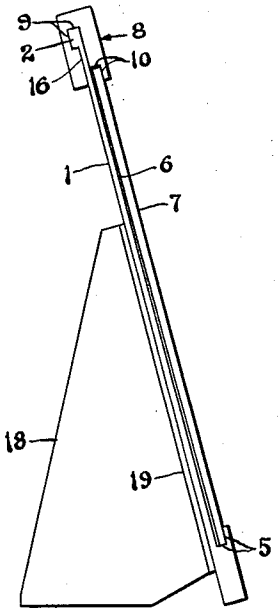

Fig. 2

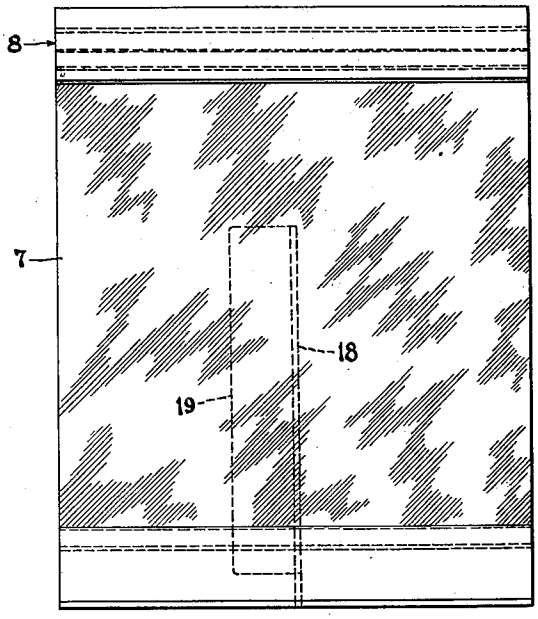

Fig. 3

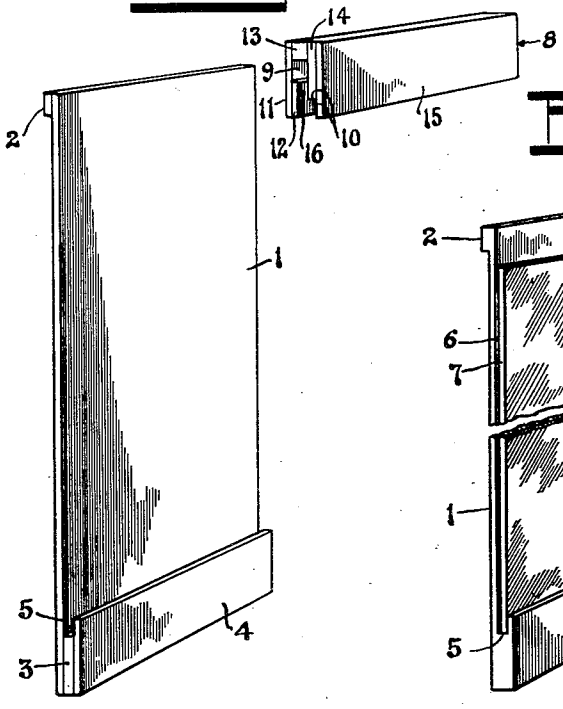

Fig. 4

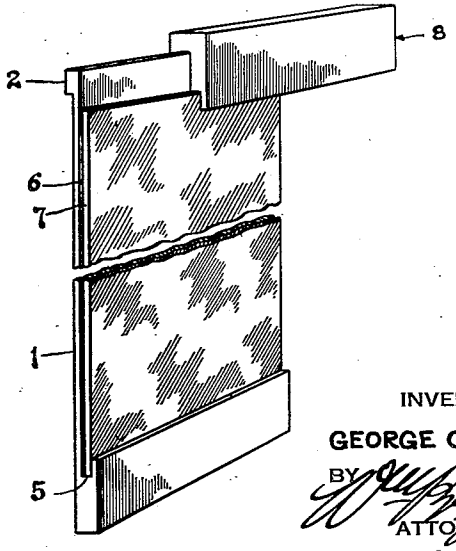

INVENTOR

GEORGE G. MEVI

BY

ATTORNEY

Patented Nov. 12, 1946 2,410,989

UNITED STATES PATENT OFFICE

2,410,989

PICTURE HOLDER

George G. Mevi, New York, N. Y.

Application April 13, 1945, Serial No. 588,143

3 Claims. (Cl. 40—152)

1

This invention relates to picture holders suitable as stands or easels or for hanging, and the object is to provide a holder having separable parts readily assembled by which a picture may be readily mounted and held flat and having the least number of parts held together by a component of the holder thereby dispensing with separate clips or other fastening devices, and which may be constructed at low cost.

The picture holder in the form of a stand or easel is illustrated in the accompanying drawing, in which,

Figures 1 and 2 are side and front elevations, respectively, of a stand suitable for photographs.

Figure 3 a perspective view of the back or main board of the picture stand and locking piece for retaining a picture in position, the locking piece being shown in the retracted or unlocked position preparatory to placing a picture and covering glass plate on the back-board, and

Figure 4 a perspective view illustrating the assembling of the back-board, picture, covering glass plate, and locking piece.

Referring to the drawing, 1 indicates the back-board of the picture holder, preferably composed of card-board, and having at the back of the top margin a locking bead formed by a reinforcing strip 2 extending across the width of board 1 and glued thereto. The front side of the lower margin of the back-board is reinforced by a strip which forms a base for the back-board. This strip is of sufficient thickness to permit the formation of a rabbet at the upper longitudinal margin so that the strip when secured to the back-board forms a mortise for receiving and retaining a picture. This rabbeted strip is preferably formed by gluing a narrow strip 3 and a wider strip 4 together and to the back-board so that the two strips with board 1 form a slot or mortise 5 which is provided for receiving and retaining the picture 6 and covering glass plate 7 as shown in Figure 4.

A removable sliding locking piece 8 is provided for engagement with locking bead 2 to lock the back-board 1, picture 6 and covering glass plate 7 together at the top of the holder. This locking piece is in the form of a long block, preferably of cardboard, of a length equal to the width of board 1 and having a mortise 9 for engaging locking bead 2 and a mortise 10 for receiving and retaining the top margins of the picture and covering glass plate. The locking piece 8, as shown in Figure 3, is preferably composed of a wide back strip 11; a narrower strip 12 glued to the inner side of strip 11 in alignment at

2

the lower edges; a still narrower but thicker strip 13 glued to the inner side of strip 11 in alignment at the top edges and spaced from strip 12; a wide strip 14 narrower than strip 11 glued upon strip 13 in alignment at the top edges and providing a space between strips 12 and 14; and a strip 15 of the same width as strip 11 glued upon strip 14 in alignment at the top edges and providing a wider space between strips 12 and 15. Thus the superimposed strips in cross-section form the mortise slot 9, a slot 16 for the thickness of the back-board, and mortise slot 10 for the picture and covering glass plate.

To support the holder in the upright position when used as a stand or easel, an angular shaped brace 18 is secured to the rear side of the back-board by a flange 19 which is preferably glued to the back-board as seen in Figures 1 and 2. The brace and flange in practice may be scored to facilitate bending into the supporting position of Figure 1 and to lie flat against the back-board when not in use. If desired the brace 18 and flange 19 may be in two separate pieces connected together by a strip of adhesive tape to form a hinge.

In practice board 1, its locking bead 2, and base mortise piece 5 are covered with plain or figured or embossed colored paper, linen, leather or leatherette to provide the desired finish and conceal the joints at the edges of the parts comprising the back-board. Locking piece 8 will likewise be covered with a covering to match the covering of the backboard. Brace 18 and flange 19 likewise will be covered with a matching covering material and such material may serve as a hinge for the brace when made in two separate pieces.

In assembling the holder with a picture, the sliding locking piece 8 is first withdrawn from the back-board as seen in Figure 3; then the picture 6 and covering glass plate 7 are placed upon the back-board with the lower margins thereof in the mortise slot 5; and then the locking piece 8 is slid into position as shown in Figure 4, bead 2 engaging in mortise slot 9 and mortise 10 engaging and retaining the picture and covering glass plate against the back-board. Thus it will be seen that a picture may be placed in position or removed by simply sliding the locking piece 8 into and out of locking position.

The picture holder shown and described may be of any desired size for different size photographs, or of larger size designed for use as a floor stand or easel in displaying large pictures or posters. When photographs or pictures are

mounted on the usual cards for photographs, or on heavy cardboard for posters, the glass covering plate may be dispensed with. Also the picture holder may be provided with a ring or other device as is common practice for hanging picture holders when desired.

What I claim is:

1. A holder for pictures composed of a back-board, a locking bead extending across the rear top margin of said board, a slotted base piece on the lower front margin of said board for retaining a picture at its lower horizontal margin, a sliding locking piece having a slot extending lengthwise thereof for engaging the front and rear upper margins of said board, said slot extending laterally at the top to form a mortise for engaging the locking bead, and extending laterally in the opposite direction at the bottom to form a mortise for retaining a picture at its upper horizontal margin.

2. A holder for pictures composed of a back-board, a narrow strip secured to and extending laterally at the upper rear margin of said board to constitute a locking-bead, a wide strip secured at the lower front margin of said board having a rabbet at its upper longitudinal edge to form with the back-board a mortise for receiving and retaining a picture at its lower horizontal margin, and a slotted sliding locking-piece engaging the top margin of said board having a mortise for engaging the locking-bead on the rear side of said board and a rabbeted front lower edge

forming with the board a mortise for engaging and retaining a picture at its upper horizontal margin.

3. A holder for pictures composed of a back-board, a locking-bead extending across the upper rear margin of said board, a rabbeted base-piece secured at the lower front margin of said board to form with the back-board a mortise for receiving and retaining a picture at its lower horizontal margin, and a slotted sliding locking-piece for engaging the front and rear sides of the upper horizontal margin of said board, said locking-piece being composed of strips of different widths secured together, the outer strips of said locking-piece being approximately of the same width, a narrower strip attached to the inner side of one of the outer strips with the lower edges in alignment, a similar strip attached to the inner side of the other outer strip with the upper edges in alignment, and a thick narrow strip secured between the outer strips with the upper edges in alignment, said three inner strips forming within the outer strips a slot for engaging the upper front margin of the back-board, a mortise for engaging the locking-bead on the rear side of the board, and a rabbet at the lower front edge of the locking-piece forming with the front upper margin of the board a mortise for engaging and retaining a picture at its upper horizontal margin.

GEORGE G. MEVI