Jan. 10, 1939. S. J. LEVY ET AL 2,143,563

SYSTEM FOR SECRET MULTIPLE-CHANNEL CARRIER INTERCOMMUNICATION

Filed March 5, 1937 3 Sheets-Sheet 1

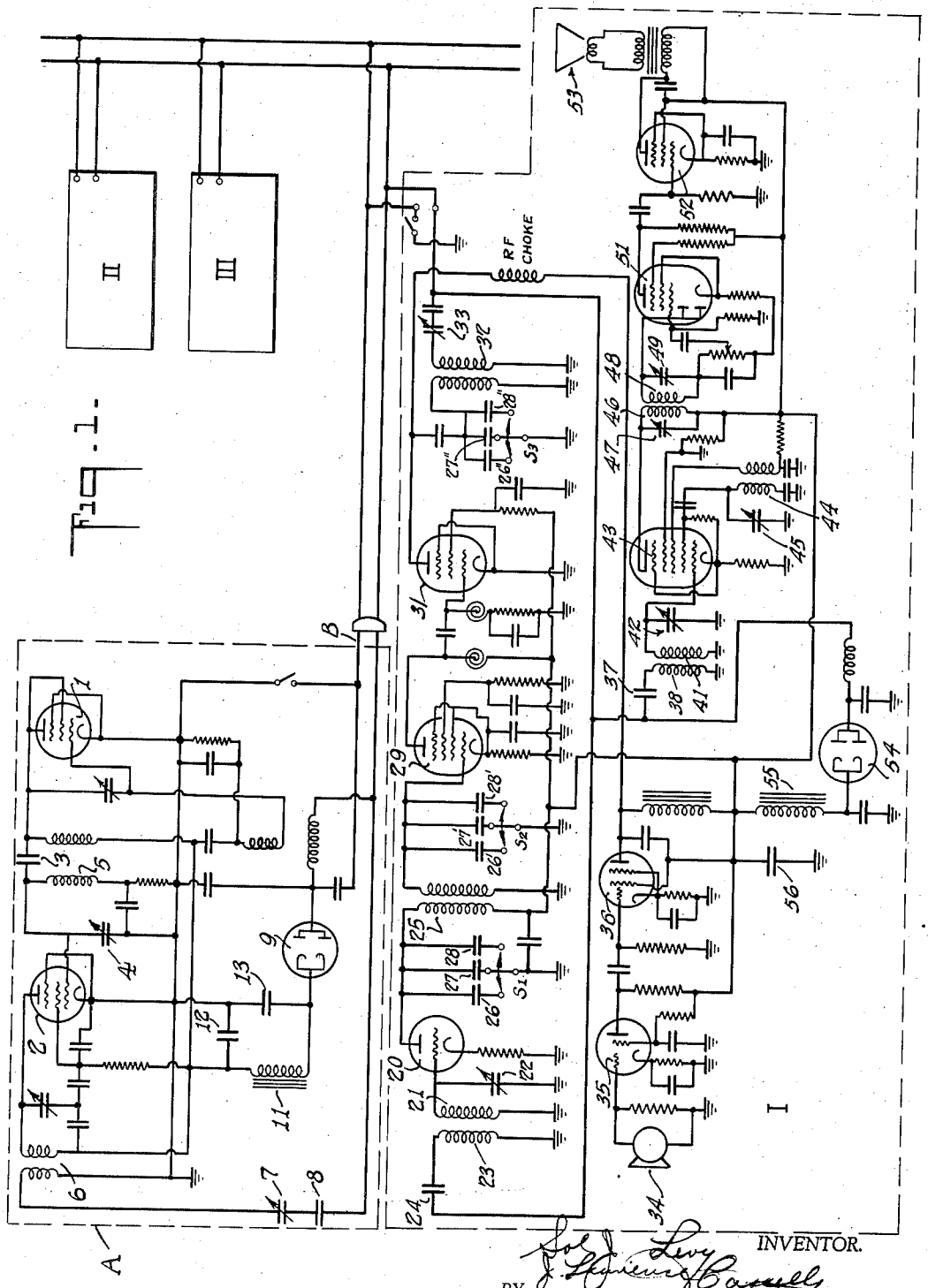

Fig. 1.

INVENTOR.

BY

ATTORNEY.

Jan. 10, 1939. S. J. LEVY ET AL 2,143,563

SYSTEM FOR SECRET MULTIPLE-CHANNEL CARRIER INTERCOMMUNICATION

Filed March 5, 1937 3 Sheets-Sheet 2

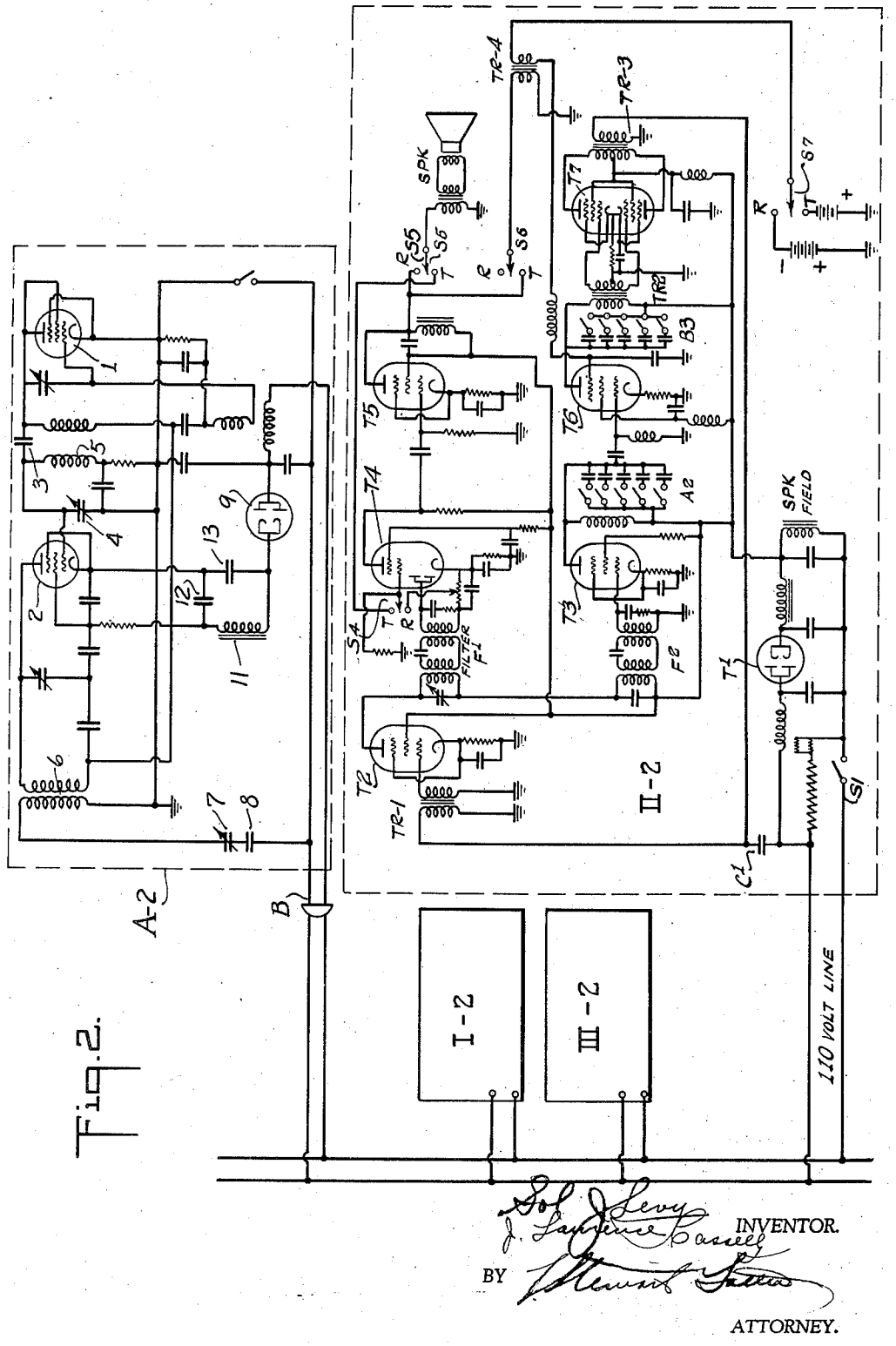

Fig. 2.

INVENTOR.

BY

ATTORNEY.

Jan. 10, 1939. S. J. LEVY ET AL 2,143,563

SYSTEM FOR SECRET MULTIPLE-CHANNEL CARRIER INTERCOMMUNICATION

Filed March 5, 1937 3 Sheets-Sheet 3

Fig. 3.

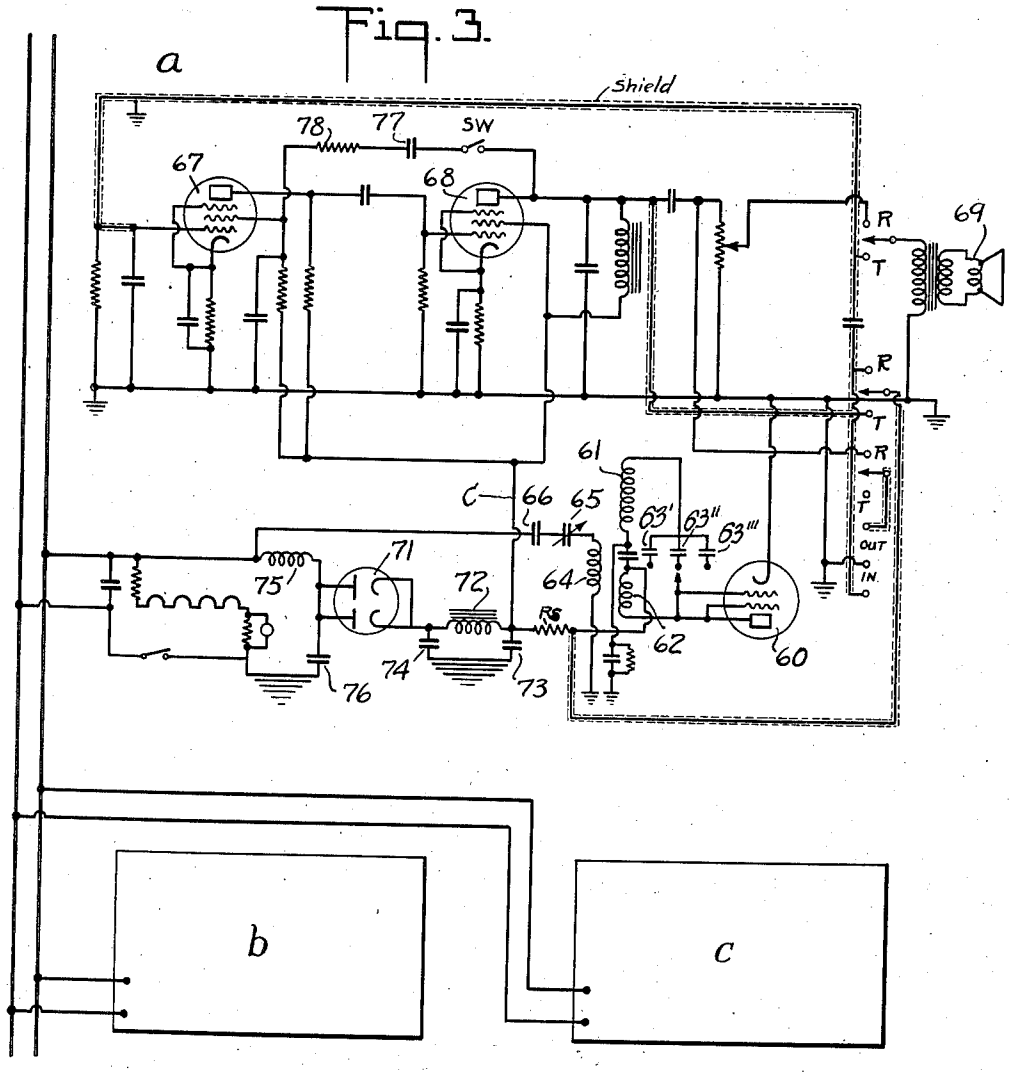

Fig. 4.

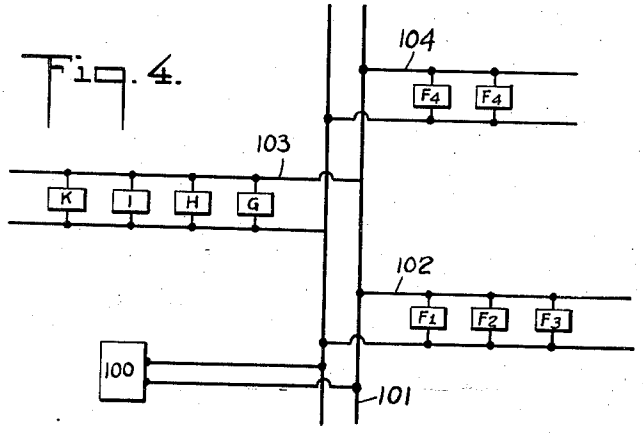

SOL J. LEVY AND
J. LAWRENCE CASSELL
INVENTOR

BY

ATTORNEY

Patented Jan. 10, 1939 2,143,563

UNITED STATES PATENT OFFICE

2,143,563

SYSTEM FOR SECRET MULTIPLE-CHANNEL CARRIER INTERCOMMUNICATION

Sol J. Levy and Joseph Lawrence Cassell, New York, N. Y., assignors to International Carrier-Call and Television Corporation, New York, N. Y.

Application March 5, 1937, Serial No. 129,140

6 Claims. (Cl. 179—2.5)

The present invention relates to a system of carrier frequency into communication over electric light and power lines, or other metallic transmission media, which is especially adaptable to be used in office buildings, factory buildings, apartment houses and the like. More particularly, the present invention relates to a multi-channel system wherein communication between different stations is effected by using different bands of carrier frequencies.

It is the object of the present invention to provide a secret multi-channel system, wherein any two stations may intercommunicate without any other station being able to interfere with such intercommunication and, in particular, to listen in on such intercommunication.

It is the further object of this invention to provide a multi-channel system, the physical characteristics of which lend themselves to mass production, whereby the first costs of the system are drastically reduced.

It is a still further object of the present invention to provide a system wherein, if any two stations are intercommunicating and a third station tries to contact either one of the intercommunicating stations, no interfering beat tone of the kind hitherto encountered is created.

It is a further object of the invention to provide a multi-channel system in which all frequencies to be modulated are dependent upon the common control frequency in a manner such that no independent variation of any of the modulated frequencies may occur.

It is a still further object of this invention to adapt a multi-channel system for use in office buildings and the like, in which rooms belonging to the same group or suite of offices are able to intercommunicate without interfering with stations provided in any other part of the building.

Other objects, and the manner in which the same are attained, will appear from the following description.

In multi-channel communication systems of the audio frequency type hitherto known, complete secrecy of intercommunication between any two stations without interference from any other station has been obtained only by adding a comparatively complicated equipment to the communication apparatus, thus considerably increasing the cost thereof. In consequency of these drawbacks, and in particular of the increased cost of such systems, the lower priced forms of audio frequency communication systems were not adapted to insure secrecy of intercommunication between any two stations.

As will be described below in detail, the present invention succeeds in providing a system insuring complete secrecy for the intercommunication of any two stations, without thereby complicating the equipment or increasing, to any substantial extent, the cost thereof.

Furthermore, by providing a multi-channel system of carrier frequency communication in which the various substations are identical with the sole exception that they are tuned to different receiving frequencies, the present invention succeeds in providing a system which is particularly suitable for mass production.

Furthermore, at each station, by transmitting on different bands of carrier frequencies, while receiving on only one band, the present invention succeeds in eliminating the beat tone, previously encountered, if and when two stations try to contact the same third station at the same time, in particular, if and when a third station tries to communicate with either one of two intercommunicating stations.

Moreover, in a carrier frequency transmission-reception system, it is of prime importance that the unmodulated frequency component, there being one for each channel, remain fixed and not vary from time to time as the result of circuit changes caused by inaccuracies in equipment assembly, circuit conditions, changes in temperature, humidity and the like.

The frequency displacement permissible between adjacent channel carriers is determined by the production of audible beats between the carriers. By suitable adjustment of the circuit, the frequency difference between carriers may be audible and yet no audible beat tones are produced in the receiving equipment. For example, with a fixed 10 kilocycle displacement between carriers the audio output circuits of the receiving equipment may be so adjusted that the 10 kilocycle beat tone is not audible and still high quality audio reproduction is obtained. Suppose, however, that due to some circuit inaccuracy or change, there is a slippage in the carrier frequency of one transmitter so that the frequency difference between that channel carrier and an adjacent carrier drops from 10 kilocycles to 3 kilocycles, it is obvious that a 3 kilocycle beat tone will be heard in the receiving equipment. Such a frequency component may not be removed from the receiver by filtering means as was the case with 10 kilocycles, as to do so would seriously impair the intelligibility of the received signal. The extreme methods resorted to in space radio broadcast transmitting equipment to

obtain frequency stability are indicative of the importance of this subject.

In carrier frequency intercommunication systems where the equipment is required to operate under conditions such as met in business offices and by inexpert personnel the questions of size and simplicity of apparatus and cost are of the greatest commercial importance and preclude the use, at each transmitter, of elaborate means such as piezocrystal control to maintain frequency stability. The present invention succeeds in providing simple effective and inexpensive means for accomplishing this end.

Interoffice communicating systems, as the name implies, operate, for example, between offices, rooms or buildings or between groups of offices, rooms or buildings. There may be, for example, one group of rooms in a given building or a number of distinct groups of rooms. Intercommunication may be required between the rooms of one group or between those of different groups.

In accordance with one embodiment of the present invention, absence of audible beat tone interference between carrier frequencies, due to slippage in frequency, is obtained by generation of one master frequency and use of harmonics thereof for the different channel carrier frequencies. For example, 10 kilocycles might be the master frequency and the tenth, eleventh, twelfth and thirteenth harmonics, or, in other words, 100, 110, 120 and 130 kilocycles, are the carrier frequencies for a four-station system. The master frequency is supplied over the power lines or other metallic transmission media to the various transmitting stations where the required harmonic is developed and used as a carrier for that station. For example, there may be one master frequency generator for one group of offices, or one for a given building, supplying a number of different groups of offices. Or one master frequency generator may even supply any given power line network common to any number of buildings. The master frequency may be generated by a tube oscillator of the high vacuum or gas type or obtained in the well known manner of beating two higher frequencies, themselves generated by tube oscillators, or it may be generated by a small, very low power alternator. If tube generators are employed, they may be provided with piezocrystal control, there being but one crystal control system for a relatively large group of transmitters.

With the master frequency system as herein described, the frequency displacement between the channel carriers is obviously the master frequency. As here the carrier for each station transmitter is a harmonic of the low master frequency, it is obvious that no circuit change at a station transmitter can change the value of this carrier. Only a change in the circuit conditions of the master generator can change the different station carriers, in which case the latter are all simultaneously changed in a manner such that the difference between adjacent carriers is always equal to the value of the master frequency or in the case where the carrier frequencies are not successive harmonics of the master frequency, the difference between adjacent carriers will always be a multiple of the value of the master frequency. Thus, there can be no independent slippage of the different station carrier frequencies and hence no interference between the same manifested in any individual receiver or elsewhere in the system.

Another embodiment of a multi-channel system according to the invention provides for local oscillators in each of the sub-stations, thus dispensing with a common control oscillator. In this case each station may generate any of a number of individual frequencies which are modulated and transmitted over a power line network or other metallic transmission media, the receiver in this case also being adjusted to one particular frequency band or range. Thus any station may select for transmission purposes the particular frequency band to which the receiver to which it is intended to transmit is adjusted, and in this manner only that particular receiver will be in intercommunication with the transmitting station, while all other stations are prevented from interfering with such intercommunication.

The invention may be applied to all types of carrier frequency communication apparatus, and, in particular, to the type using a separate microphone and loud speaker, as well as to the transceiver type where a single instrumentality is used as both microphone and loud speaker.

In the drawings accompanying the present specification and forming part thereof, several embodiments of our invention are illustrated diagrammatically by way of example.

In the drawings,

Fig. 1 is a wiring diagram of one embodiment of a multi-channel system according to the present invention, showing a carrier control frequency oscillator and three sub-stations provided for transmitting and receiving on harmonics of the control frequency operating over a common power network, the sub-stations including separate microphone and loud speaker arrangements.

Fig. 2 is a similar wiring diagram in which the substations are transceiver units, employing a single instrumentality as both microphone and loud speaker.

Fig. 3 illustrates another embodiment of the invention, showing three stations provided with local oscillators in each station, each station being provided for operating on various fundamentals generated by the local oscillator; while

Fig. 4 illustrates the arrangement of the multi-channel systems according to the invention in an office building.

Referring now to the drawings, and first to Fig. 1, A shows a carrier control frequency oscillator feeding a control frequency on a power line network indicated at B, a number of sub-stations I, II and III being operatively connected with the same power network.

The carrier control frequency oscillator A includes a local oscillator 1 which generates, for example, 25 kilocycles. This high frequency output is coupled to the grid circuit of the tube 2 by a coupling capacity 3 and the grid tuning circuits 4 and 5. The tube 2 is provided as a class C amplifier, the output of which is coupled to the transformer 6 which in turn is coupled to the line through capacities 7 and 8. 9 indicates a conventional rectifier with its soothing reactor 11 and filter capacities 12 and 13. This arrangement as indicated at A as a whole is designed to put sufficient carrier at a frequency of 25 kilocycles for example on the network indicated at B to operate the harmonic generators, described below.

Referring now to the sub-stations I, II and III shown in Fig. 1, the grid circuit of the tube 20 includes inductance 21 and capacity 22 tuned, e. g., to 25 kilocycles, the coupling to line B being

effected at 23 and 24. The plate circuit of the tube 20 comprises a number of capacities 26, 27 and 28 which, according to the position of a switch S_1, which is shown to be of the rotary type but which may be of any other well known type, for example of the lever type, will tune to any one of the harmonics of 25 kilocycles. Correspondingly, the grid circuit of the tube 29 and the plate circuit of the tube 31 are provided with capacities 26', 27' and 28', and 26'', 27'' and 28'' respectively, which are controlled by switches S_2 and S_3, respectively, which are interconnected with the switch S_1, so as to be operated simultaneously and correspondingly. The plate circuit of the tube 29 is coupled capacitively to the tube 31, provided as a class C amplifier. This is then coupled to the line through inductance 32 and capacity 33. A microphone 34 works into the tube 35, the output of which is worked into the tube 36. This tube serves the purpose of modulating the desired harmonic frequency at 31. The receiver has for its pick-up circuit capacity 37 and inductance 38 coupled to circuit 41 and 42 tuned to the incoming frequency.

The tube 43 is a converter tube having the converted frequency controlled by inductance 44 and capacity 45. Inductance 46 and capacity 47 forming a closed tuned circuit, which is coupled to circuit composed of inductance 48 and capacity 49 as a combination are tuned to the converted or intermediate frequency, which is supplied to the diode of tube 51. The other elements of the tube 51 form a high MU pentode, the output of which is amplified by tube 52, which is connected to the speaker 53 of the receiver. 54 indicates a conventional half-wave rectifier including the filters 55 and 56.

In the operation of the embodiment of the invention according to Fig. 1, a carrier control frequency is put on the line by the oscillator A so that it is picked up by any of the sub-stations I, II and III. By suitably controlling the capacities, 26, 27 and 28, 26', 27', 28' and 26'', 27'' and 28'' any desired harmonic of the control frequency may be developed in a manner such that any sub-station may transmit any of a predetermined number of harmonics of the control frequency.

The receiver of each sub-station is adjusted to one particular harmonic of the control frequency which is different from the harmonics correlated with the receivers of any other sub-station.

Accordingly, by suitably selecting the desired harmonic of the common control frequency, for example, substation I may transmit on the frequency to which the receiver of the sub-station III is adjusted. In this manner only sub-station III will receive the communication transmitted by sub-station I, while sub-station II is prevented from interfering with and, in particular, from listening in on the intercommunication between sub-stations I and III. When intending to answer to sub-station I, sub-station III will select the harmonic to which the receiver of sub-station I is adjusted so that it will be heard only by the sub-station I, any interference on the part of sub-station II, or any other additional sub-station, being again prevented.

Referring now to Fig. 2, this figure illustrates an arrangement similar to that shown in Fig. 1, employing, however, transmitter-receiver units, the principle of which we have disclosed in our co-pending application for U. S. Letters Patent Ser. No. 81,350, filed May 23, 1936, Patent No. 2,114,718, dated April 19, 1938. As disclosed in the aforesaid application, such units utilize all essential elements for both transmission and reception of modulated carrier frequencies, the same instrumentality, for example, serving as a microphone for transmission purposes and as a loud speaker for reception purposes.

In the lower left-hand corner of the unit indicated at II—2 in Fig. 2, the 110 volt lines of an electric light network enter the unit through an on-and-off switch indicated at S1. Across the line and ground, a transformer TR—1 is inserted. This transformer is of an iron core type suitable for passing frequencies above 15 kilocycles for example and cutting off some place above 300 and 400 kilocycles. No 60 cycles will pass through this transformer from the 110 volt lines.

T2 designates a radio frequency amplifier tube, amplifying the entire band above 15 kilocycles.

A filter shown at F1 inserted in the plate circuit of T2 selects 25 kilocycles for example, rejecting all other frequencies and transfers the 25 kilocycle energy to the grid of tube T3. T3 is so biased that harmonics of 25 kilocycles are developed in its plate circuit, anyone of which can be selected by the key switches indicated at A2 and B3. In Fig. 2, these switches shown to be of the lever type, may, of course, be of any other well known type and in particular of the rotary type.

The RF voltage produced across this tank circuit of tube T3 then passes to the grid of the tube T6 which is provided as a class C amplifier tube which has its suppressor grid arranged in such a manner that voice frequencies passing through the transmitter TR—4 will modulate any one of these harmonics being amplified by the tube T6. The output circuit of T6 is coupled through another iron core transformer TR—2, the primary of which is tuned to the harmonic frequency that it is wished to speak on and the secondary of this transformer being untuned, supplies the loss of a class B or class AB linear power amplifying tube T7, the output circuit of which is connected to the transformer TR—3, which is also untuned. The secondary of this transformer is of a reasonably high impedance, as is the primary of TR—1, so that these transformers may be maintained connected across the 110 volt lines at all times through the blocking condenser C1.

In the transmitting position, which is accomplished by switching the switches S4, S5, S6 and S7 which are coupled in a manner such as to be operated by a single switching operation, to the transmit position, the speaker speaks into the instrumentality indicated at SPK, which for transmission purposes serves as the microphone and is at that moment connected across the grid or input of the tube T4; the voice currents are amplified by the tube T4 and T5 passing through transformer TR—4 and modulating the tube T6 by its suppressor.

When the switches S4, S5, S6 and S7 are turned to the receiving position, the instrumentality SPK, now acting as a loud speaker, is connected to the output of the power amplifier tube T5, switch S7 biasing the suppressor of the tube T6 with a high negative voltage, thereby dropping the plate current of the tube T7 in a manner such that there is no background noise when the unit is in receive position. As before, the transformer TR—1 passes the signal voltage from

another station to the grid of the tube T2, and this frequency is then passed through the filter indicated at F' to the diode section of the tube T4, rectifies this high frequency and passes it to the audio amplifier section of T4, where the output is amplified by T5 and put in the loud speaker.

The operation of the embodiment of the invention according to Fig. 2 is substantially the same as disclosed with respect to Fig. 1. However, as will appear more clearly from the disclosure in our above mentioned co-pending application, this arrangement involves the advantages inherent in the transceiver arrangement.

Both the embodiments of the invention according to Figs. 1 and 2 succeed in completely eliminating the beat tone formerly encountered when two stations try to intercommunicate with the same third station. While formerly communication between any two stations was greatly or even completely disturbed as soon as a third station tried to contact either one of the intercommunicating stations, this disadvantage is now completely eliminated.

Moreover, independent slippage of the individual frequencies to be modulated cannot occur according to the invention, since all modulated frequencies are dependent upon the common contral frequency by being harmonics thereof. Thus, whenever the common control frequency changes, all the frequencies to be modulated will change correspondingly in a manner such that their relation to each other is always maintained constant. Since beat tones are produced by changes in the relation of various frequencies to be modulated to each other, no beat tones will be heard in the system according to the invention where such relationship is maintained constant.

Fig. 3 illustrates a further embodiment of the invention, in which, instead of providing a common control frequency oscillator for all substations, a number of identical stations are employed, each of which contains its own local oscillator. This embodiment of the invention is illustrated by way of example on a number of transceiver units embodying the principles of our above mentioned co-pending application, but we wish it to be understood that the invention can just as well be employed on other carrier frequency communication apparatus such as, for example, shown in Fig. 1.

Figure 3 shows three stations *a*, *b* and *c*. Each station contains its own local oscillator as illustrated at 60. The inductance 61 and 62 and capacities 63', 63'' and 63''' determine the three frequencies employed viz; two for transmitting respectively to stations *b* and *c* and one for receiving, to which the oscillator-detector tube 60 is adjusted. Capacities 65, 66 and inductance 64 serve to tune and couple the line to the desired frequencies. Both sets of capacities are shown to be adjusted by switches which preferably are mechanically operatable from the transmit-receive switch. The output of the oscillator is fed through inductance 64 to the line. The sending frequencies of station *b* would be the receiving frequencies of station *a* and *c*, while the sending frequencies of *c* would be the receiving frequencies of *a* and *b*. When the switch is in the transmitting position the speaker indicated at 69 becomes a microphone, the output of which is amplified by the audio amplifier tubes 67 and 68, the latter serving as a modulator tube in its action upon an oscillator tube 60.

In receive position, the vacuum tube 60 becomes a detector by inserting a resistance Rs in its plate circuit which stops it from oscillating. Resistance Rs is thrown in and out of the circuit by means of the transmit-receive switch, members of which are indicated at the right of the Fig. 3. In the transmitting position, the plate voltage, derived from rectifier 71, is fed through choke coil 72 to connection C and therethrough to choke coil CH, from thence through the shielded lead L1 to the transmit-receive switch, and therethrough, through the shielded lead L2 to the plate of tube 60. In the receiving position this path is opened at the transmit-receive switch and resistance Rs is placed in series between the plate of tube 60 and the point of common connection of choke coil 72 and capacity 73. The output of this detector is then fed through the audio amplifier 67 and then into the output tube 68, which in turn actuates the speaker which now functions as a loud speaker. 71 is a conventional half-wave rectifier with its filter system 72, 73 and 74.

A filter indicated at 75 and 76 is inserted in the circuit, the purpose of the capacity 76 being to completely short-out the high frequency generated by the half-wave rectifier 71.

Choke coil 75 presents a high positive reactance to the higher spurious frequencies of the power supply, resulting from rectification at 71. Capacity 76 forms a low reactance shunting path to these same frequencies. Inductance 75 and capacity 76 prevent the high spurious rectification frequencies from being impressed upon the line system while inductance 75 individually prevents capacity 76 from acting as a short circuit to the carrier signal frequencies, which are sent over or received from the line.

The operation of a multi-channel system according to Fig. 3 will be apparent from the foregoing description. Here again the receiver of each station preferably is adjusted to one particular receiving frequency, which is different from the receiving frequencies of any other station in the system. The transmitter of each station is adapted to generate as many frequencies as there are stations in the system minus one, in a manner such that by suitably selecting the receiving frequency of the station to which it is intended to talk, each transmitter may contact the desired station to the exclusion of all other receiving stations. Thus, interference by any third station in regard to any intercommunicating stations is completely eliminated and complete secrecy of intercommunication is insured.

While the multi-channel system according to Fig. 3 has been illustrated, by way of example, on a number of transceiver units according to applicant's above mentioned co-pending application, this system may equally well be applied to other types of carrier frequency communication apparatus and, in particular, may be applied to apparatus having a separate microphone and loud speaker arrangement.

Fig. 4 illustrates one position arrangement of the multi-channel systems according to the invention in an office building.

In Fig. 4, a carrier control frequency oscillator of any desired type, for example, such as shown at A in Fig. 1, is indicated at 100, as being connected with a power line network indicated at 101. Branch circuits, there being one indicated for each floor of the building, are shown at 102, 103 and 104. In the branch circuit 102, three

sub-stations F1, F2 and F3 are indicated, all of which are supplied through the power line as harmonics of the control frequency generated in the control frequency oscillator 100. Station F1 would transmit on frequencies F2 and F3 and receive on F1. Similarily station F2 would transmit on frequencies F1 and F3 and receive on F2, etc.

In the branch circuit 103, four stations, G, H, I and K, are shown which do not pick up the control frequency, but which are all provided with local oscillators and which operate all on the same frequency.

In the branch circuit 104, a two-station arrangement is shown which includes the stations F4 and F4. Both of these stations operate on one and the same harmonic, e. g., F4, of the control frequency generated by the control frequency oscillator 100, since there are only two stations in this case and thus no interference on the part of a third station within this set-up is to be excluded. These stations transmit and receive on the same harmonic frequency which, of course, must be different from any other harmonic frequencies employed in connection with the control frequency oscillator 100.

We wish it to be understood that wherever we use the term "loudspeaker" in the present application, we intend to include any well known equivalent of receiving instrumentality as well, such as, for example, telephone receivers, piezo-crystal or any other equivalent thereof.

Numerous advantages are obtained with the secret multiple channel carrier frequency intercommunication systems according to the present invention.

A multi-channel system is created which will provide perfect secrecy of intercommunication so that interference of any third party with the intercommunication of any two stations is completely eliminated. The novel system facilitates, and reduces the costs of, the manufacture of carrier frequency apparatus by lending itself particularly well to mass production. The trouble previously encountered when a third station tried to contact one of two intercommunicating stations, which manifested itself in beat tones which frequently made intercommunication altogether impossible, is eliminated according to the present invention. Individual slippage of any of the frequencies operated on by any sub-station is avoided due to operation on harmonics of one and the same control frequency. Finally, the systems are particularly adapted for use on various floors and in connection with various groups of offices in office buildings and the like. Thus, the systems are able to fill a steadily increasing demand for reliable and inexpensive office intercommunication systems.

We wish it to be understood that we do not desire to be limited to the exact details of construction and design shown and described, for obvious modifications within the scope of the appended claims may occur to persons skilled in the art.

We claim:

1. A secret multiple-channel carrier frequency intercommunication system comprising in combination a metallic transmission medium such as an electric network, a source of unmodulated carrier control frequency energy supplying said transmission medium, a plurality of distinct groups of carrier frequency apparatus, each group comprising at least two carrier frequency transmitting and receiving units having their outputs and inputs connected with said transmission medium, and means in said transmitting and receiving units for effecting operation on harmonics of said carrier control frequency, the units of each group being adapted to operate on one distinct harmonic of the carrier control frequency which is different from the harmonics operated on by any other group.

2. A secret multiple-channel carrier frequency intercommunication system comprising in combination a metallic transmission medium such as an electric network, a source of unmodulated carrier control frequency energy supplying said transmission medium, a plurality of carrier frequency transmitting and receiving units having their outputs and inputs connected with said transmission medium and means provided in said transmitting and receiving units for effecting transmission on any of a plurality of harmonics of said carrier control frequency, and for effecting reception on only one distinct harmonic of said carrier control frequency, each unit being arranged for reception on one harmonic which is different from any harmonics correlated with any other units.

3. A secret multiple-channel carrier frequency intercommunication system comprising in combination an electric wire network of a restricted type, a source of unmodulated carrier control frequency energy supplying said network, a plurality of distinct groups of carrier frequency apparatus, each group comprising at least two carrier frequency transmitting and receiving units having their outputs and inputs connected with said wire network, and means in said transmitting and receiving units for effecting operation on harmonics of said carrier control frequency, the units of at least one group being adapted to operate on one distinct harmonic of the carrier control frequency which is different from the harmonics operated on by any other group, and at least one other group including a larger number of units, each of said last-named units being adapted to transmit on any of a plurality of distinct harmonics which are different from the harmonics operated on by any other group, and to receive on only one of said plurality of distinct harmonics of said carrier control frequency.

4. The method of carrier frequency intercommunication on metallic transmission media such as an electric network, comprising in combination the steps of supplying a carrier control frequency to said network, coupling to said network a plurality of groups of carrier frequency transmitting and receiving apparatus, each group comprising at least two transmitting and receiving units, and operating all the units belonging to one particular group on a distinct harmonic frequency of said control frequency, while operating the other groups of units each on a different harmonic frequencies of said control frequency.

5. The method of carrier frequency intercommunication on an electric light and power network, comprising in combination the steps of supplying a master control carrier frequency to said network, coupling a plurality of carrier frequency transmitting and receiving units to said network, transmitting from each unit on any of a plurality of harmonics of said master control frequency, while receiving in each unit on one distinct harmonic, each of said plurality of harmonics thus being correlated for reception purposes with one particular unit.

6. The method of carrier frequency intercom-

munication on an electric light and power network, comprising in combination the steps of supplying a carrier control frequency to said network, coupling to said network a plurality of groups of carrier frequency transmitting and receiving apparatus, each group comprising at least two transmitting and receiving units, operating the units belonging to at least one particular group of a distinct harmonic frequency of said control frequency, and operating the units of at least one other group on a plurality of harmonics different from those operated on by any other group, in such a manner that each of said units transmits on any of said plurality of harmonics, and receives on only one of said plurality of harmonics.

SOL J. LEVY.
JOSEPH LAWRENCE CASSELL.