(12) INTERNATIONAL APPLICATION PUBLISHED UNDER THE PATENT COOPERATION TREATY (PCT)

(19) World Intellectual Property Organization
International Bureau

(43) International Publication Date
22 October 2009 (22.10.2009)

PCT

(10) International Publication Number
WO 2009/128906 A1

(51) International Patent Classification:
G06F 17/50 (2006.01) *G06T 17/00* (2006.01)
G06F 3/00 (2006.01)

(21) International Application Number:
PCT/US2009/002328

(22) International Filing Date:
14 April 2009 (14.04.2009)

(25) Filing Language: English

(26) Publication Language: English

(30) Priority Data:

61/044,626	14 April 2008 (14.04.2008)	US
61/044,629	14 April 2008 (14.04.2008)	US
12/422,552	13 April 2009 (13.04.2009)	US

(71) Applicant *(for all designated States except US)*: **SIEMENS PRODUCT LIFECYCLE MANAGEMENT SOFTWARE INC.** [US/US]; 5800 Granite Parkway, Suite 600, Plano, TX 75024 (US).

(72) Inventors; and

(75) Inventors/Applicants *(for US only)*: **MAWBY, Eric** [US/US]; 7 Woodvue Road, Windham, NH 03087 (US). **DEDHIA, Hiren** [US/US]; 3 Hollyhock Drive, Irvine, CA 92602 (US). **YU, Feng** [US/US]; 806 Marinella Aisle, Irvine, CA 92606 (US). **QIN, Hui** [CN/CN]; Room 1805, Building No. 1, No. 2 Lin Ping Bei Rd, Shanghai City, 200086 (CN).

(74) Agents: **WALLACE, JR., Michael, J.** et al.; Siemens Corporation- Intellectual Property Dept., 170 Wood Avenue South, Iselin, NJ 08830 (US).

(81) Designated States *(unless otherwise indicated, for every kind of national protection available)*: AE, AG, AL, AM, AO, AT, AU, AZ, BA, BB, BG, BH, BR, BW, BY, BZ, CA, CH, CN, CO, CR, CU, CZ, DE, DK, DM, DO, DZ, EC, EE, EG, ES, FI, GB, GD, GE, GH, GM, GT, HN, HR, HU, ID, IL, IN, IS, JP, KE, KG, KM, KN, KP, KR, KZ, LA, LC, LK, LR, LS, LT, LU, LY, MA, MD, ME, MG, MK, MN, MW, MX, MY, MZ, NA, NG, NI, NO, NZ, OM, PG, PH, PL, PT, RO, RS, RU, SC, SD, SE, SG, SK, SL, SM, ST, SV, SY, TJ, TM, TN, TR, TT, TZ, UA, UG, US, UZ, VC, VN, ZA, ZM, ZW.

(84) Designated States *(unless otherwise indicated, for every kind of regional protection available)*: ARIPO (BW, GH, GM, KE, LS, MW, MZ, NA, SD, SL, SZ, TZ, UG, ZM, ZW), Eurasian (AM, AZ, BY, KG, KZ, MD, RU, TJ, TM), European (AT, BE, BG, CH, CY, CZ, DE, DK, EE, ES, FI, FR, GB, GR, HR, HU, IE, IS, IT, LT, LU, LV, MC, MK, MT, NL, NO, PL, PT, RO, SE, SI, SK, TR), OAPI (BF, BJ, CF, CG, CI, CM, GA, GN, GQ, GW, ML, MR, NE, SN, TD, TG).

[Continued on next page]

(54) Title: SYSTEM AND METHOD FOR ACTIVE SELECTION IN A SOLID MODEL

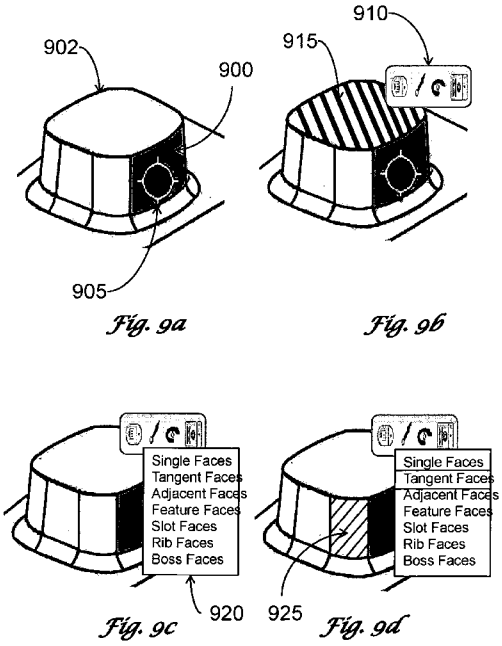

Fig. 9a *Fig. 9b* *Fig. 9c* *Fig. 9d*

(57) Abstract: A system, method, and computer program for selecting modification features on a solid model that is manipulated in a computer having software instructions, comprising: a computer system, wherein the computer system includes a memory, a processor, a user input device, and a display device; a computer generated geometric model stored in the memory in the memory of the computer system; and wherein the computer system selects a modification feature directly on a solid model using a computer peripheral input that communicates a modification intent from a user; suggests a plurality of additional selection features to include with the modification feature; verifies that the included plurality of additional selection features conforms to the modification intent by a visual highlighting; modifies the solid model according to the modification intent that results in a modified solid model and modified visual display information; and displays the modified solid model using the modified visual display information to the user; and appropriate means and computer-readable instructions

WO 2009/128906 A1

Published:

— *with international search report (Art. 21(3))*

— *before the expiration of the time limit for amending the claims and to be republished in the event of receipt of amendments (Rule 48.2(h))*

SYSTEM AND METHOD FOR ACTIVE SELECTION IN A SOLID MODEL

Cross-Reference to Related Applications

[Para 1] This Application claims priority to pending Provisional U.S. Applications Ser. Nos. 61/044,626 and 61/044,629, both filed on April 14, 2008.

Technical Field

[Para 2] The system of the innovations described herein relates generally to computer-aided design software applications. More specifically, the system relates to suggesting selections in a solid model representation.

Background

[Para 3] In today's world of computer-aided design (CAD) applications and geometry modeling systems, parts are commonly designed in one of two ways: history-based or history-less. A history-based system is commonly characterized by the parametric modeling paradigm that emerged in the mid-1980s. In parametric modeling systems, a recipe, or history tree, is created to reflect how things are related to one another. When a change is made to one original item, all items created later in time from the original item are updated. In this way, for example, two faces may remain coplanar, because they were designed with such a relationship captured during the design process and simply "replayed" during the update process. **Figures 1a – 1c** illustrate a trimetric projection of a three-dimensional block. Referring to Figure 1a, a C block **100** in three-dimension ("3D") is viewable to a user on a computer display and is in need of a modification by a user by altering a bottom leg **105**, a top leg **110**, or both the bottom leg 105 and the top leg 110. In a history-based system, how easily the user modifies the C block 100 depends upon how it was originally designed in the CAD application system, such as NX by Siemens Product Lifecycle Management Software Inc. Commonly, an original designer creates and/or designs a part that is later modified by a modify designer who maybe completely unfamiliar to the

original designer. For example, if the original designer, i.e., the person that originally designed the C block 100, had the design method intent to constrain the faces related to the bottom leg 105 and the top leg 110 as coplanar, then the modification action illustrated in Figure 1c is easy to accomplish using known parametric/history-based modeling techniques that are basic to one skilled in the art of 3D model design; when two faces are constrained to be coplanar, moving one face will cause the other face to move as well. On the other hand, modifying the C block 100 in a history-less or the body-based approach taken by companies like CoCreate, IronCAD, and Kubotek, for example, fails to maintain the history-tree made popular by the parametric modeling paradigm. In the history-less approach, changes are made explicitly for each item on a solid model. If the original designer of the C block 100 intended that the faces on the bottom leg 105 and the top leg 110 maintain a coplanar relationship, later modifications require the manual selection of the faces for edit to ensure the desired result, which is difficult if the original designer's intent is unknown or unascertainable. For example, the modify designer can make either change illustrated in Figure 1b or Figure 1c simply be selecting the one face or individually select all of the other coplanar faces, which happens to be a small number in this example but could be in the hundreds in a complex assembly model. Alternatively, some software applications could allow the modify designer to "make faces coplanar" and permanently capture the design intent after the fact at time of edit, but this can also be cumbersome particularly with very large models. This later alteration would make the modification see in Figure 1b difficult at a later date particularly since now the design intent may be baked into the model contrary to design intent.

[Para 4] The issue with the history-based approach is that design intent is incorporated and fixed at the time of model creation. In contrast, the history-less systems are flexible about change at a later date, but capture very little intelligence about how things are related. If modify designers determine to manually capture such intelligence at a later point in time, then,

like history-based systems, that intelligence is incorporated and fixed thereby limiting further flexibility.

[Para 5] That said, in the geometry modeling systems, geometry selection techniques involve setting options prior to selecting the geometry, i.e., the designers have to plan ahead to prepare for what they want to select. Planning ahead entails recommended preparatory actions and in many cases recommended error recovery when the selection does not satisfy the modification at hand. In history-less system commands, selection options used to perform a modification are likely to change between command sessions, as well as within the command session. For example, with a move face command, the designer may move a boss, a rib, and a face connecting the boss and the rib in one command session. In another command session, the designer may move a single face or simply a slot.

[Para 6] **Figure 2** illustrates a planning ahead interaction where each arrow represents a different interaction pathway. Referring to Figure 2, each box represents a cognitive or physical process that occurs depending upon the circumstance identified in the box. The more boxes an arrow intersects, the more processes the pathway entails. "Arrow 1" **200** is the simplest interaction illustrating the selection options are set correctly, and the designer selects what is intended. "Arrow 2" **205** is similar to "Arrow 1" 200 but passes through a recovery meaning the designer does not prepare, unintentionally selects something to modify, and has to recover from the error. "Arrow 3" **210** occurs when the designer interprets the selection option before selecting, thinking the option is set correctly, but still unintentionally selects something that requires the designer to recover the error. "Arrow 4" **215** represents the worst case and occurs when the designer interprets the selection option, determines the need to change the option, changes the option, but still unintentionally selects something that requires the designer to recover from the error. "Arrow 5" **220** occurs when the designer interprets the selection option, determines the need to the change the option, changes the option, and then selects what the designer

intended. "Arrow 6" **225** occurs when the designer interprets the selection option, determines it as correct, and then selects what the designer intended.

[Para 7] This cognitive and physical processing may occur with each selection within the command session, where the worst case is that recovery from error is required for each command selection that is a drain on efficiency. Method to recover from an error vary and range from de-selecting the geometry of an individual object to de-select everything to start all over, either of which impose a measurable time penalty on the designer, as well as the immeasurable defeat felt by the designer in the need to recover from the error.

[Para 8] The inventors have advantageously recognized a need for a system and method for active selection in a solid model to alleviate the negative aspects of planning ahead selection.

Summary

[Para 9] To address the identified need and related problems, a system provides a system for selecting modification features on a solid model that is manipulated in a computer having software instructions, comprising a computer system, wherein the computer system includes a memory, a processor, a user input device, and a display device; a computer generated geometric model stored in the memory in the memory of the computer system; and wherein the computer system selects a modification feature directly on a solid model using a computer peripheral input that communicates a modification intent from a user; suggests a plurality of additional selection features to include with the modification feature; verifies that the included plurality of additional selection features conforms to the modification intent by a visual highlighting; modifies the solid model according to the modification intent that results in a modified solid model and modified visual display information; and displays the modified solid model using the modified visual display information to the user.

[Para 10] Other features of the system are set forth in part in the description and in the drawings that follow, and, in part are learned by practice of the system. The system will now be described with reference made to the following Figures that form a part hereof. It is understood that other embodiments may be utilized and changes may be made without departing from the scope of the system.

Brief Description of the Drawings

[Para 11] A system will hereinafter be described in conjunction with the appended drawings, wherein like designations denote like elements, and:

[Para 12] **Figures 1a – 1c** illustrate a trimetric projection of a three-dimensional block;

[Para 13] **Figure 2** illustrates a planning ahead interaction where each arrow represents a different interaction pathway;

[Para 14] **Figure 3** illustrates a sample virtual product development environment;

[Para 15] **Figure 4** is a block diagram of a computer environment in which the system may be practiced;

[Para 16] **Figure 5** illustrates a general concept of a software programming code embodied in a software application

[Para 17] **Figure 6** is a box diagram of a general view of a method employed by the embodiment;

[Para 18] **Figure 7** is a box diagram of a general view of a method employed by the embodiment;

[Para 19] **Figure 8** illustrates an active selection interaction resulting from the use of the disclosed system;

[Para 20] **Figures 9a-9d** illustrate an exemplary active selection in a solid model modification system; and

[Para 21] **Figure 10** illustrates an exemplary solid model modification system.

Detailed Description of the Preferred Embodiments

1. INTRODUCTION

[Para 22] A method and system for modifying geometric relationships in a solid model are described. In the following description, for the purposes of explanation, numerous specific details are set forth in order to provide a thorough understanding of the system. It will be apparent, however, to one skilled in the art that the system may be practiced without these specific details. In other instances, well-known structures and devices are shown in block diagram form in order to avoid unnecessarily obscuring the system.

[Para 23] **Figure 3** illustrates a sample virtual product development environment. The virtual development environment employed today typically begins with a customer request, or an innate desire, to create or improve upon a product, generally shown at **300**. That product can be as simple as a bottle opener or as complex as a submarine. Referring further to Figure 3, an original designer models a desired product according to known methods employed by a computer-aided design (CAD) application **305**, The CAD application 305 is executed on a general computing machine which subsequently becomes a specific purpose computing environment for the sake of executing computer-aided design routines at the time of application execution and interaction, the details of which are discussed below. The CAD application 305 is preferably SolidEdge or NX both offered for license by Siemens Product Lifecycle Management Software Inc. A CAD user operates the CAD application 305 in a well known and understood manner so as to virtually display a solid model that resembles and conforms to an original design requirement ascertained from the customer request or the innate desire. The solid model is commonly an assembly of components and assemblies, where the assemblies are further broken down into sub-assemblies and/or components, all preferably having a virtual representation stored for subsequent recall in solid model data files **325**.

[Para 24] Once the solid model is determined to be in a suitable form comporting to the original design requirements, it is preferably tested using a

computer-aided engineering (CAE) application **310** such as NX CAE or FEMAP offered by Siemens Product Lifecycle Management Software Inc by a CAE user for part fault-tolerance tests and a variety of other engineering tests. If the CAE user determines that the solid model has to be modified to successfully pass the fault-tolerance tests the solid model is returned to the CAD user for modification in the CAD application 305. This iteration between the CAD application 305 and the CAE application 310 and the respective users is recursive until the solid model successfully passes necessary design requirements and engineering test.

[Para 25] Following successful completion, the solid model in its final design form is further designed for physical manufacture in a computer-aided manufacturing (CAM) application **315** such as NX CAM or CAM Express both offered by Siemens Product Lifecycle Management Software Inc. By using the CAM application 315, a CAM user will model how numerical control programs, molds, tools and dies manufacture a physical product **330**. The CAM user may have additional modifications to comport to the original design requirements, for example, using eletro-discharge machining (EDM) may require different techniques depending if a wire-cut EDM or die-sinking EDM is used to manufacture the physical product 330. To virtually mill a part, the CAM application 315 defines the preferably electrode path of the orbit for the EDM process. The CAM user may determine that in order to comport to design and engineering requirements, the solid model requires a subtle modification in dimensions, for example following a cool-down to allow for hardening of the material comprising the physical product 330.

[Para 26] Following the successful virtual designing, engineering, and manufacturing of the product, a manufacturer can link all manufacturing disciplines with product engineering related to the product including: process layout and design, process simulation/engineering, and production management utilizing a digital factory application **320** such as Tecnomatix offered by Siemens Product Lifecycle Management Software Inc. The manufacturer may find the need to modify the physical product 330 because

the CAM users modeled the product with, for example, an EDM system that is outdated and requires the manufacturer to use a 5-axis turning machine to create the necessary blank or the manufacturer has shifted to injection molding rather than compression molding to form the parts that comprise the physical product 330. For example, the solid model has to be modified to comport to the final requirements to manufacture the physical product 330.

[Para 27] Throughout the virtual product development described above, the product design flowed for example from the customer request to the CAD user to the CAE user to the CAD user, back to the CAE user, to the CAM user, and then to the Manufacturer for physical production of the physical product 230. With each edit to the solid model, geometric relationships are also modified so as to comport to the necessary design changes by the CAD user, the CAE user, the CAM user, and the Manufacturer, for example. Further as each of the CAD/CAE/CAM users modify the solid model, a data model that defines the solid model is also modified to properly account for the changes discussed above and properly stored in the solid model data files 325. The manufacturer then proceeds to produce the physical product 330 according to the original design specifications and subsequent engineering modifications. The virtual product development occurs in a system, where the system and method for modifying geometric relationships in a solid model is executable in a variety of software applications resident in memory on a variety of hardware systems, described in more detail below.

2. COMPUTER PROGRAM PRODUCT

[Para 28] Turning now to a hardware system, **Figure 4** is a block diagram of a computer system in which the system may be practiced. Figure 4 and the following discussion are intended to provide a brief, general description of a suitable hardware system and computing environment in which the embodiment may be implemented. The embodiment may be performed in any of a variety of known computing environments.

[Para 29] Referring to Figure 4, an exemplary computer system includes a computing device in the form of a computer **400**, such as a desktop or laptop

computer, which includes a plurality of related peripheral devices (not depicted). The computer 400 includes a central processing unit (CPU) **405** and a bus **410** employed to connect and enable communication between the central processing unit 405 and a plurality of components of the computer 400 in accordance with known techniques. The operation of the CPU 405 is well understood in the art that is preferably an electric circuit that can execute computer programs having computer-executable instructions encoded thereon, such as program modules, which are executed by the computer 400. Generally, program modules include routines, programs, objects, components, data structures, etc., that perform particular tasks or implementation particular data types. Preferably the program modules include a file processing module **406**, a data display module **407**, a logic processing module **408**, and a method processing module **409**. The logic processing module 408 sends requests to the file processing module 406, the data display module 407 and the method processing module 409 to operate according to the computer-executable instructions. Likewise the logic processing module receives requests from the file processing module 406, the data display module 407 and the method processing module 409 to operate according to the computer-executable instructions. The bus 410 also enables communication among the various program modules and the plurality of components. The bus 410 may be any of several types of bus structures including a memory bus or memory controller, a peripheral bus, and a local bus using any of a variety of bus architectures. The computer 400 typically includes a user interface adapter **415**, which connects the central processing unit 405 via the bus 410 to one or more interface devices, such as a keyboard **420**, mouse **425**, and/or other interface devices **430**, which can be any user interface device, such as a touch sensitive screen, digitized pen entry pad, etc. The bus 410 also connects a display device **435**, such as an LCD screen or monitor, to the central processing unit 405 via a display adapter **440**. The bus 410 also connects the central processing unit 405 to a memory **445**, which can include ROM, RAM, etc.

[Para 30] The computer 400 further includes a drive interface **450** that couples at least one storage device **455** and/or at least one optical drive **460** to the bus. The storage device 455 can include a hard disk drive, not shown, for reading and writing to a disk, a magnetic disk drive, not shown, for reading from or writing to a removable magnetic disk drive. Likewise the optical drive 460 can include an optical disk drive, not shown, for reading from or writing to a removable optical disk such as a CD ROM or other optical media. The aforementioned drives and associated computer-readable media provide non-volatile storage of computer readable instructions, data structures, program modules, and other data for the computer 400 that is accessible by the file processing module 406 according to instructions received by the logic processing module 408 in the method described by instructions provided by the method processing module 409.

[Para 31] The computer 400 can communicate via a communications channel **465** with other computers or networks of computers. The computer 400 may be associated with such other computers in a local area network (LAN) or a wide area network (WAN), or it can be a client in a client/server arrangement with another computer, etc. Furthermore, the embodiment may also be practiced in distributed computing environments where task instructions provided by the logic processing module 408 in the method described by instructions provided by the method processing module 409 and are performed by remote processing devices that are linked through a communications network. In a distributed computing environment, the program modules may be located in both local and remote memory storage devices. All of these configurations, as well as the appropriate communications hardware and software, are known in the art.

[Para 32] Turning now to the program modules in more detail, **Figures 5a-5b** illustrate a general concept of a software programming code embodied in a software application. Referring further to Figure 5a, the program modules will be described in more detail below in the context of the embodiment where a software application **500** contains accessible program

modules as those discussed above. The software application 500 may be in the form of a solid modeling application such as the aforementioned CAD application 205, the CAE application 210 or CAM application 215. Further it is contemplated that the software application 500 is provided by a third party vendor with particular API ("application programming interface") call features for access and utilization. Continuing, as the user interacts with the software application 500, certain modification events trigger interaction with a variational modeling toolkit **505**, to be discussed in greater detail below. The software application 500 and the variational modeling toolkit 505 together or individually utilize the logic processing module 408 in the method described by instructions provided by the method processing module 409 to call a low-level geometric modeling kernel to accomplish the certain modification events of the solid model according to the commands selected by the user and executed by the software application 500, as generally understood in the art of solid modeling, but also discussed in more detail below. The low-level geometric modeling kernel is commonly a collection of at least a three-dimensional (3D) geometric modeler **510** like Parasolid licensed by Siemens Product Lifecycle Management Software Inc and a collection of geometric software component libraries **515** like the 3D DCM (or "DCM") product offered by Siemens Product Lifecycle Management Software Inc.

[Para 33] Put another way, referring to Figure 5b, the variational modeling toolkit 505 operates on variational edit commands communicated from the software application 500. Additionally, the software application 500 communicates non-variational modeling calls to the 3D geometric modeler 510, and the 3D geometric modeler 510 utilizes the collection of geometric software component libraries 515 as normally understood in the art of geometric modelers. With regard to the variational modeling toolkit 505, and to be discussed in greater detail below, several operations occur related to the variational edit that involve find, edit, solve and apply. It is commonly understood in the art of solid modeling that the collection of geometric software component libraries above provides modeling functionality such as

geometric constraint solving, variational design, parametric design, motion simulation, collision detection, clearance computations, topology location, topology move solution, and hidden line removal, for example. It is also contemplated to be within the scope of this embodiment that the 3D geometric modeler 510 and the component libraries 515 are components of the same application rather than separate components, or combinations thereof. Having described the computer program product, more detail is now provided with regard to a system.

3. ACTIVE SELECTION SYSTEM

[Para 34] Turning now to the active selection system, **Figure 6** is a box diagram of a general view of a method employed by the embodiment. Referring to Figure 6, the embodiment discloses the logic processing module 408 using the method described by instructions provided by the method processing module 409, where the described method is a method for selecting modification features on a solid model that is manipulated in a computer having software instructions for design, generally depicted at **600**. The following steps are mentioned to provide an overview of the embodiment described in the system having details that are subsequently discussed. The system selects a modification feature directly on a solid model using a computer peripheral input that communicates a modification intent from a user (**Step 600**). The system suggests a plurality of additional selection features to include with the modification feature (**Step 605**). The system verifies that the included plurality of additional selection features conforms to the modification intent by a visual highlighting (**Step 610**). The system modifies the solid model according to the modification intent that results in a modified solid model and modified visual display information (**Step 615**). The system displays the modified solid model using the modified visual display information to the user (**Step 620**).

4. ACTIVE SELECTION METHOD

[Para 35] Turning now to the active selection system in greater detail, **Figure 7** is a box diagram of a general view of a method employed by the

embodiment. Referring to Figure 7, a gesture interpretation ("GI") module at **700** receives notifications and messages from preferably the mouse 425 and interprets what will happen at a mouse event at **705** that preferably includes the selection of a modification topology. The gesture interpretation module at 700 receives the notification and directs a highlight of the selected object at **710**. The highlight of a selected object at 710 directs the action towards an active selection module at **715**. In the active selection module at 715, a motion sensitive launcher at **720** is created to interface with the active selection, the details of the motion sensitive launcher at 720 will be discussed below, with the motion sensitive launcher created using the following sample pseudo-code:

```
Handle Create_MSL_interface (device_id, mouse_position, msl_callback, callback_data)
{
    if MSL_manager is not created yet
        create a MSL_manager

    ask MSL_manager to
        create and display the MSL interface with fade-in effect
        set MSL_displau_flag = true

    return a handle of the MSL_manager back to GI client

}
```

After the MSL interface is active, the gesture interpretation module at 700 need to continuously inform the motion sensitive launcher at 720 manager about the current mouse position on the graphics (display) window so the manager can track the mouse and decide if it needs to dismiss the MSL interface. Also the manager needs to track if the mouse is over the interface

itself, so it could launch the shortcut menu callback, according to the sample pseudo-code:

```
Boolean Track_MSL_interface (MSL_manager, mouse_position)
{
        set MSL_dismiss_flag = FALSE
        if the MSL_manager == NULL
                return MSL_dismiss_flag

        asl MSL_manager to
                if distance between mouse_position and the center of the
                MSL_interface > defined threshold radius
                        call Dismiss_MSL_interface
                        set MSL_dismiss_flag = TRUE
                if mouse if over the MSL_interface
                        call Dismiss_MSL_interface
                        launch shortcut menu callback
                        set MSL_dismiss_flag = TRUE

        return MSL_dismiss_flag
}
```

If the mouse 425 is no longer on a modification topology at **722**, meaning the designer has determined to move away from the modification object, then the motion sensitive launcher at 720 is dismissed at **725** or a callback event occurs at **730** such that the gesture interpretation module at 700 receives control and displays a selection intent shortcut menu at **735**. Alternatively, the mouse event 705 could indicate the dismissal of the selection intent shortcut menu at **740** as well, according to the following sample pseudo-code:

```
Void Dismiss_MSL_interface (MSL_manager)
}
        if MSL_manager == NULL
                return

        ask MSL_mananger to
                fade away the interface
                destroy and delete the interface
                set the MSL_display_flag = FALSE

        return

{
```

The selection intent shortcut menu can be a mouse-activated popup and launched by the gesture interpretation module. The gesture interpretation module client would preferably pass the topological structure to the gesture interpretation module as part of the request to the gesture interpretation module to launch the motion sensitive launcher at 720. Alternatively, Microsoft's minibar behavior can be employed, i.e., fade-in while positioning the menu and fade out while moving the mouse away from a threshold region. It is therefore also contemplated that the motion sensitive launcher and related manager is used to launch any kind of tool and/or menu. Sample pseudo-code:

```
boolean Launch_MSL_tool (MSL_manager, device_id, menu_data, mouse_position)
{
        set menu_create_flag = FALSE

        if MSL_manager == NULL
                return menu_create_flag
```

```
        if MSL_display_flag = TRUE
                call Dismiss_MSL_interface

        ask MSL_manager to
                create a client menu
                display the menu at the mouse position with fade-in effect
                set menu_pointer = menu
                set menu_create_flag = TRUE

        return menu_create_flag

}
```

After the client tool is positioned, the gesture interpretation module preferably informs the MSL manager about the current mouse position on the graphics window, so the gesture interpretation module could track if the mouse has traveled outside the threshold region and decide if it needs to dismiss the tool, with the following sample pseudo-code:

```
Boolean Track_MSL_tool (MSL_manager, shortcut_menu, mouse_position)
}

        menu_dismiss_flag = FALSE

        if the MSL_manager == NULL
                return menu_dismiss_flag

        ask MSL_manager == NULL
                return menu_dismiss_flag

        ask MSL_manager to
```

```
            if menu_pointer != NULL
                    if the mouse travels outside the offset of the defined
                    rectangular region of the menu
                            call Dismiss_MSL_tool
                            set menu_dismiss_flag = TRUE
                    if the mouse is on the menu and an item is selected
                            launch a callback to apply the rule
                            call Dismiss_MSL_tool
                            set menu_dismiss_flag = TRUE

        return menu_dismiss_flag

{
```

The MSL tool is dismissed when an item on the menu is selected, or a mouse has traveled outside the defined threshold region, or any non-motion mouse event may trigger the closing, having the following sample pseudo-code:

```
Void Dismiss_MSL_tool (MSL_manager)
{

        if MSL_manager == NULL
                return

        ask MSL_manager to
                fade away the menu
                destroy and delete the menu

        return

}
```

[Para 36] **Figure 8** illustrates a planning ahead interaction resulting from the use of the disclosed system. Referring to Figure 8, it is apparent that while the number of interaction pathways is reduced to four, generally illustrated at **800**, it is important to note that the two most penalty-laden interaction pathways have been removed. Preferably illustrated, within the interaction pathway the decision processing of changing the option is made from before an object is selected to after an object is selected. A GOMS (Goals, Operations, Methods, Selection) analysis illustrates the improved efficiency due to the simplicity of reducing the interaction pathways, illustrated in the following Table:

			look at (distant)	look at (near)	Verify rule	cursor to target	target	target size (cm)	target distance (cm)	Open list	Visual search	items in list	click	Verify selection
			0.44	0.17	1.2	Fitt's				0.2	Hick's		0.2	1.2
	Time	% Time												
Current, likely	5.288	100%												
Interpret rule	1.64	31%	0.44		1.2									
Change rule (current)	1.549	29%		0.17		0.41	option menu	0.6	10	0.2	0.56	9	0.2	
Select face	0.898	17%	0.44			0.26	face	2	10				0.2	
Verify selection	1.2	23%												1.2
Current, worst	7.452	100%												
<Current, likely>	5.288	71%												
Recover	2.165	29%								0.2	0.56	9	0.2	1.2
Suggestive, expected	2.972	100%												
Select face	0.898	30%	0.44			0.26	face	2	10				0.2	
Change rule (suggestive)	0.873	29%		0.17		0.06	icon	0.9	0.5		0.44	5	0.2	
Verify selection	1.2	40%												1.2
Suggestive, worst	5.136	100%												
<Suggestive, expected>	2.972	58%												
Recover	2.165	42%								0.2	0.56	9	0.2	1.2

For this analysis, mouse pointer travel from the scene to interface and back is averaged at 10 centimeters screen distance, which will vary in actual practice but was held constant for this analysis. Further, the face size to move was 2 centimeters square but did not account for the need to rotate the view, zoom, etc., to select a modification face. Also as seen from the results in the above

table, it does not take the average designer 5.288 seconds to execute the first scenario but it is representative of the mechanical and mental time required for the task itself while removing ancillary human behavior. From the numbers it is easy to see that recovery is expensive. Preparation in the "Current, likely" scenario is also relatively expensive, accounting for 60% of the task. Preferably, the suggestive interface will "reduce preparation" and will "substantially reduce the need for recovery."

5. ACTIVE SELECTION ILLUSTRATION

[Para 37] **Figures 9a-9d** illustrate an exemplary active selection in a solid model modification system. Referring to Figure 9a, a designer selects a modification face **900** on a boss feature **902** by use of a mouse pointer **905** that results in the highlighting of the modification face 900. The designer can determine before selection that a selection intent will be a single face as depicted, or in the alternative, the system can provide a drop-down menu of choices for active selection when the mouse pointer 905 is positioned over the modification face 900 for a predetermined amount of time, e.g., 2 seconds, or immediately following. Referring to Figure 9b, an active toolbar **910** is displayed preferably within 2 centimeters in display screen distance of the mouse pointer 905, where it is contemplated that the active toolbar 910 is modeless, passive and that selection can continue without having to first dismiss the active toolbar 910. Because of the designer's intent, a single face **915** is automatically highlighted to satisfy the selection intent. Referring to Figure 9c, the designer could intend to select a different face to include in his modification, in so doing, the active toolbar provides other alternative suggestions in an active selection window **920** that preferably display geometric conditions or topological proximity, for example, Tangent Faces, Adjacent Faces, and Feature Faces. Referring to Figure 9d, the designer selected "Tangent Faces" that results in the highlighting and selection of a tangent face **925**. The designer can select the boss feature 902 face-by-face as illustrated, or can select the boss feature 902 in its entirety using the active selection window 920 displaying "Boss Faces."

[Para 38] **Figure 10** illustrates an exemplary solid model modification system. The user using the software application 500 executes the necessary commands for the software application 500 to access the storage device 455 that is preferably a hard disk drive **1000** having data related to a virtual representation of a solid model stored in the solid model data files 525 that are preferably accessible by the software application 500, the variational modeling toolkit 505, the 3D geometric modeler 510 and the component libraries 515. Referring further to Figure 10, the software application 500 is characterized by a solid modeling application **1005** that accesses the solid model data files 525 structured preferably as data files **1010** stored on the hard disk drive 1000 in preferably a stand.x_t format that refers to a modeler transmit file type for the 3D geometric modeler 510, a stand.vtk_data format that refers to a variational modeling toolkit information file type for the variational modeling toolkit 505, where stand* refers to a generic part file name. The solid modeling application 1005 has its own recognized file type extensions, for example APP, which it uses to obtain sufficient information for manipulation of the solid model. Continuing, the solid modeling application 1005 loads the stand.x_t file into a 3D geometric modeler session body to be accessed by the 3D geometric modeler 510. The stand.vtk_data file is loaded and added to the 3D geometric modeler session body. The solid modeling application 1005 loads the application data relating to the solid model and accesses the data files 1010 according to its own file type, for example PRT. Once the interaction has been created, to be discussed later, the variational modeling toolkit 505 handles the modification computations by way of the variational modeling toolkit API **1015**, which is discussed in more detail below. Following the solid model modification, in order to save the modified solid model to the hard disk drive 1000, block **1020** illustrates the data related to the variational modeling toolkit 505 is striped from the solid model and placed into a vtk_data data structure that is then saved to the stand.vtk_data file. The stripped solid body is also saved to the hard disk drive 1000, as is the application data.

6. CONCLUSION

[Para 39] The embodiment may be implemented in digital electronic circuitry, or in computer hardware, firmware, software, or in combinations thereof. An apparatus of the embodiment may be implemented in a computer program product tangibly embodied in a machine-readable storage device for execution by a programmable processor; and method steps of the embodiment may be performed by a programmable processor executing a program of instructions to perform functions of the embodiment by operating on input data and generating output.

[Para 40] The embodiment may advantageously be implemented in one or more computer programs that are executable on a programmable system including at least one programmable processor coupled to receive data and instructions from, and to transmit data and instructions to, a data storage system, at least one input device, and at least one output device. The application program may be implemented in a high-level procedural or object-oriented programming language, or in assembly or machine language if desired; and in any case, the language may be a compiled or interpreted language.

[Para 41] Generally, a processor will receive instructions and data from a read-only memory and/or a random access memory. Storage devices suitable for tangibly embodying computer program instructions and data include numerous forms of nonvolatile memory, including by way of example semiconductor memory devices, such as EPROM, EEPROM, and flash memory devices; magnetic disks such as internal hard disks and removable disks; magneto-optical disks; and CD-ROM disks. Any of the foregoing may be supplemented by, or incorporated in, specially-designed ASICs (application2-specific integrated circuits).

[Para 42] A number of embodiments have been described. It will be understood that various modifications may be made without departing from the spirit and scope of the embodiment. It is anticipated that the disclosed active selection system will work as well with conditions such as coplanar,

coaxial, etc., as it does with features. Therefore, other implementations are within the scope of the following claims.

What is claimed is:

[Claim 1] A system for selecting modification features on a solid model that is manipulated in a computer having software instructions, comprising:

a computer system, wherein the computer system includes a memory, a processor, a user input device, and a display device;

a computer generated geometric model stored in the memory in the memory of the computer system; and

wherein the computer system selects a modification feature directly on a solid model using a computer peripheral input that communicates a modification intent from a user; suggests a plurality of additional selection features to include with the modification feature; verifies that the included plurality of additional selection features conforms to the modification intent by a visual highlighting; modifies the solid model according to the modification intent that results in a modified solid model and modified visual display information; and displays the modified solid model using the modified visual display information to the user.

[Claim 2] The system of [Para 9], wherein the computer system displays a solid model without design intent intelligence computed from the visual display information extracted from the solid model data file.

[Claim 3] The system of [Para 9]. wherein the computer system loads a solid model data file having visual display data into a solid model modeling application.

[Claim 4] The system of [Claim 3], wherein the computer system computes the modified solid model into the solid model data file.

[Claim 5] A method for selecting modifications to a solid model,

comprising:

selecting a modification feature directly on a solid model using a computer peripheral input that communicates a modification intent from a user;

suggesting a plurality of additional selection features to include with the modification feature;

verifying that the included plurality of additional selection features conforms to the modification intent by a visual highlighting;

modifying the solid model according to the modification intent that results in a modified solid model and modified visual display information; and

displaying the modified solid model using the modified visual display information to the user.

[Claim 6] The method of [Claim 5], further comprising displaying a solid model without design intent intelligence computed from the visual display information extracted from the solid model data file.

[Claim 7] The method of [Claim 5], further comprising loading a solid model data file having visual display data into a solid model modeling application.

[Claim 8] The method of [Claim 7], further comprising computing the modified solid model into the solid model data file.

[Claim 9] A computer program product, comprising a computer usable medium having a computer readable program code embodied therein, the computer readable program code adapted to be executed to implement a method for selecting modifications to a solid model, the method comprising:

providing a system, wherein the system comprises a logic processing module, a display processing module, and a method processing module;

selecting a modification feature directly on a solid model using a computer peripheral input that communicates a modification intent from a user in a solid modeling application, and wherein the selecting is performed by a method processing module in response to being called by the logic processing module;

calculating a plurality of additional selection features to include with the modification feature, and wherein the calculating is performed by the method processing module in response to being called by the logic processing module;

verifying that the included plurality of additional selection features conforms to the modification intent by a visual highlighting, wherein the verifying is performed by the display processing module in response to receiving the calculated and selected information from the method processing module communicated to the logic processing module;

modifying the solid model according to the modification intent that results in a modified solid model and modified visual display information, and wherein the modifying is performed by a method processing module; and

displaying the modified solid model using the modified visual display information from the modification processing module by the display processing module to the user.

[Claim 10] The computer program product of [Claim 9], further comprising displaying the solid model without design intent intelligence computed from the visual display information extracted from the solid model data file, and

wherein the displaying is performed by a display processing module in response to being called by the logic processing module.

[Claim 11] The computer program product of [Claim 10], further comprising providing the system with a data file processing module.

[Claim 12] The computer program product of [Claim 11], further comprising loading the solid model data file having visual display data into the solid model modeling application, and wherein the loading is performed by a data file processing module in response to being called by the logic processing module.

[Claim 13] The computer program product of [Claim 11], further comprising computing the modified solid model into the solid model data file by data file processing module in response to being called by the logic processing module.

[Claim 14] A system for selecting modifications to a solid model representation that is manipulated in a computer having software instructions for design, comprising:

a computer system, wherein the computer system includes a memory, a processor, a user input device, and a display device;

a computer generated geometric model stored in the memory in the memory of the computer system; and

wherein the computer system loads a solid model data file having visual display data into a solid model modeling application; displays a solid model without design intent intelligence computed from the visual display information extracted from the solid model data file; selects a modification feature directly on a solid model using a computer peripheral input that communicates a modification intent from a user; suggests a plurality of

additional selection features to include with the modification feature; verifies that the included plurality of additional selection features conforms to the modification intent by a visual highlighting; modifies the solid model according to the modification intent that results in a modified solid model and modified visual display information; computes the modified solid model into the solid model data file; and displays the modified solid model using the modified visual display information to the user.

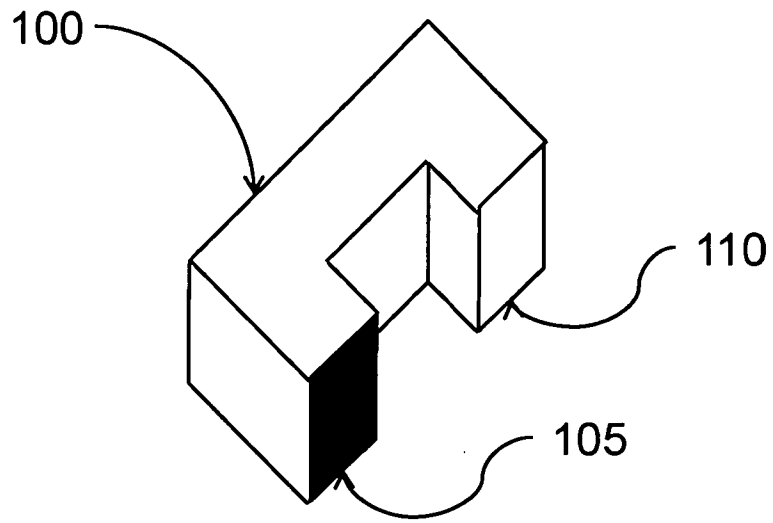

Fig. 1a

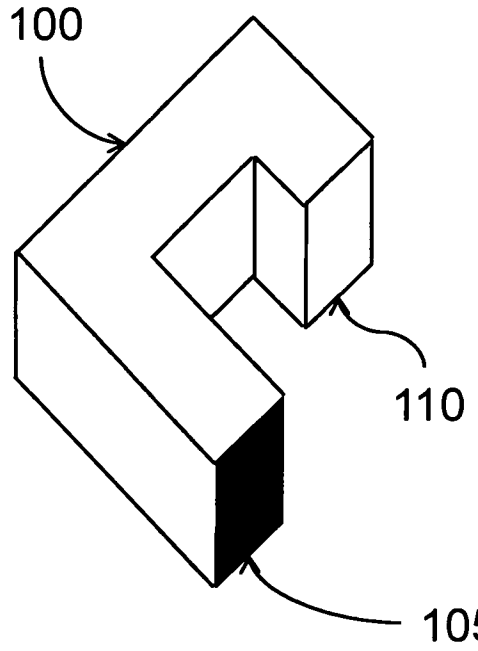

Fig. 1b

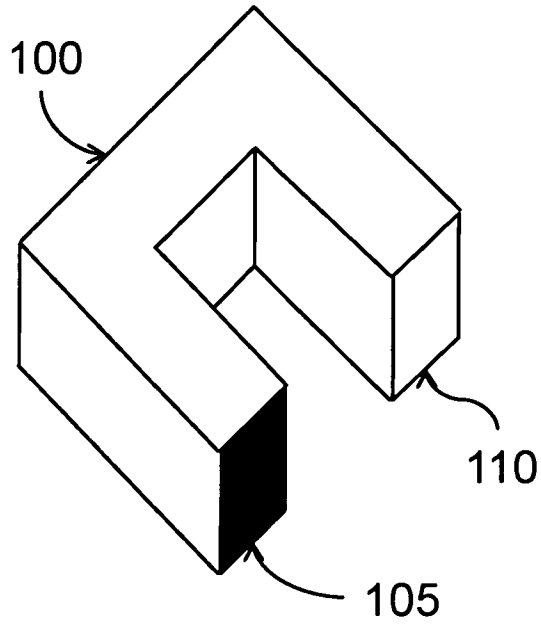

Fig. 1c

Figs. 1a-1c

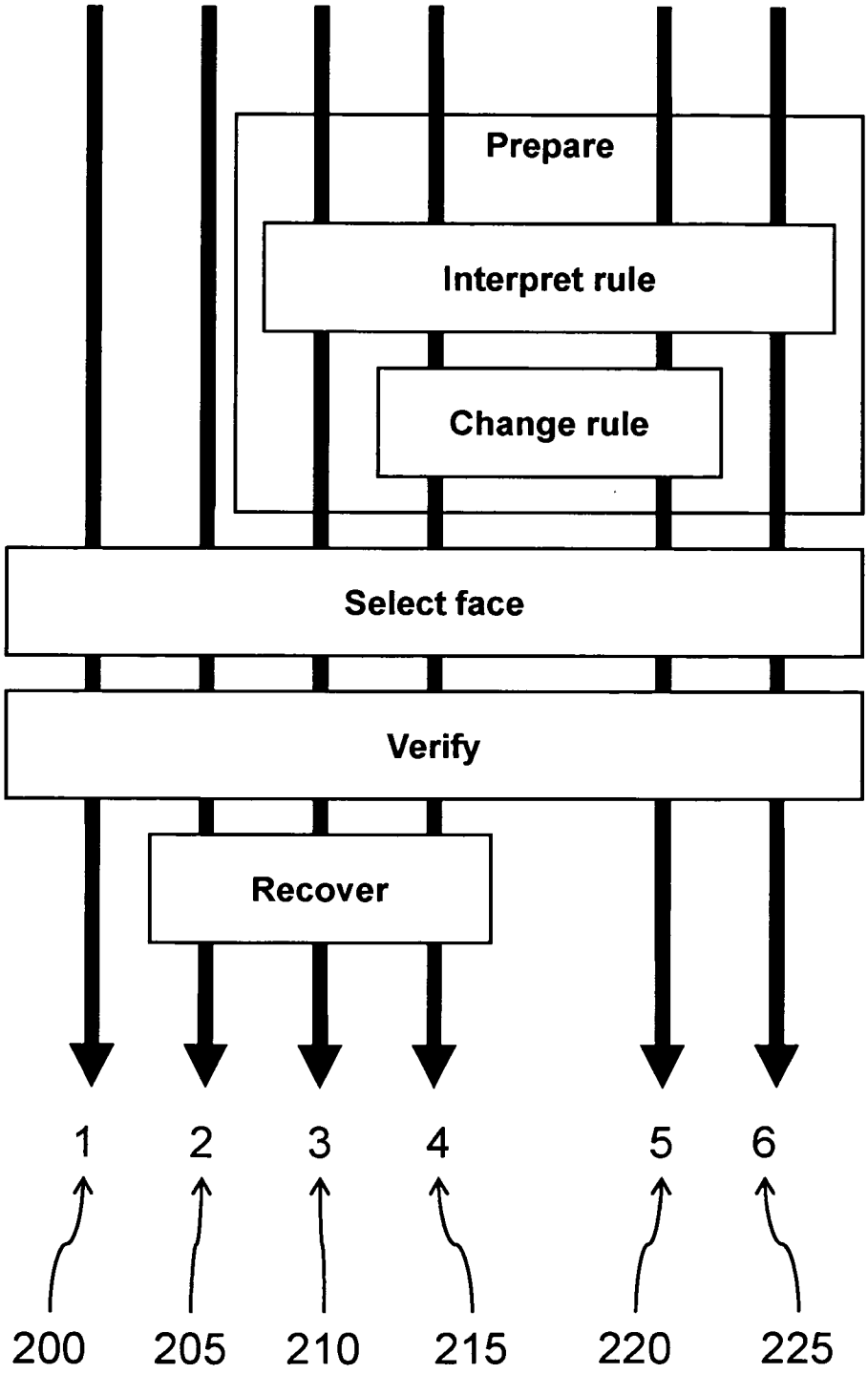
Prepare
Interpret rule
Change rule
Select face
Verify
Recover
1
2
3
4
5
6
200
205
210
215
220
225

Figs. 2

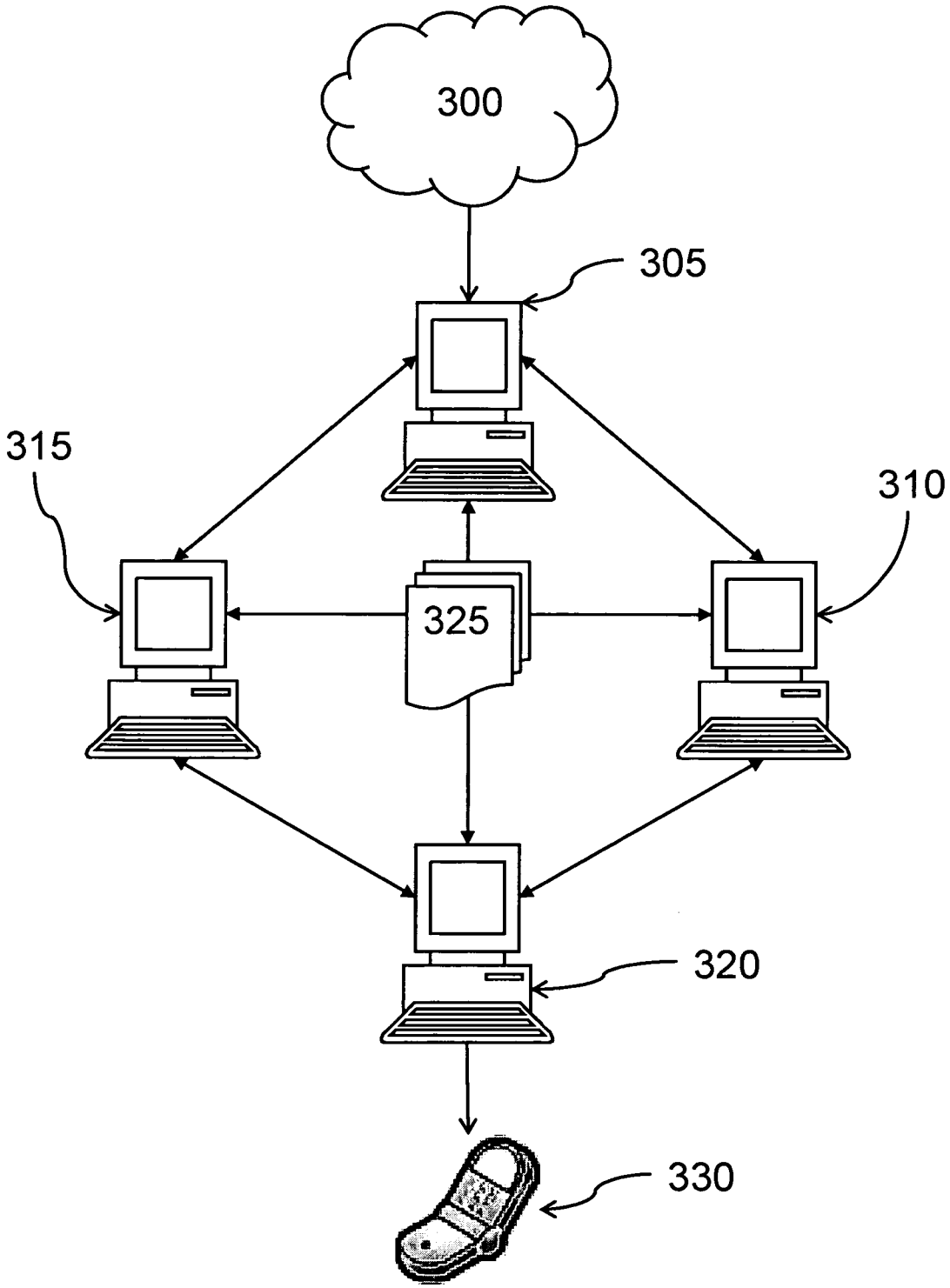

Fig. 3

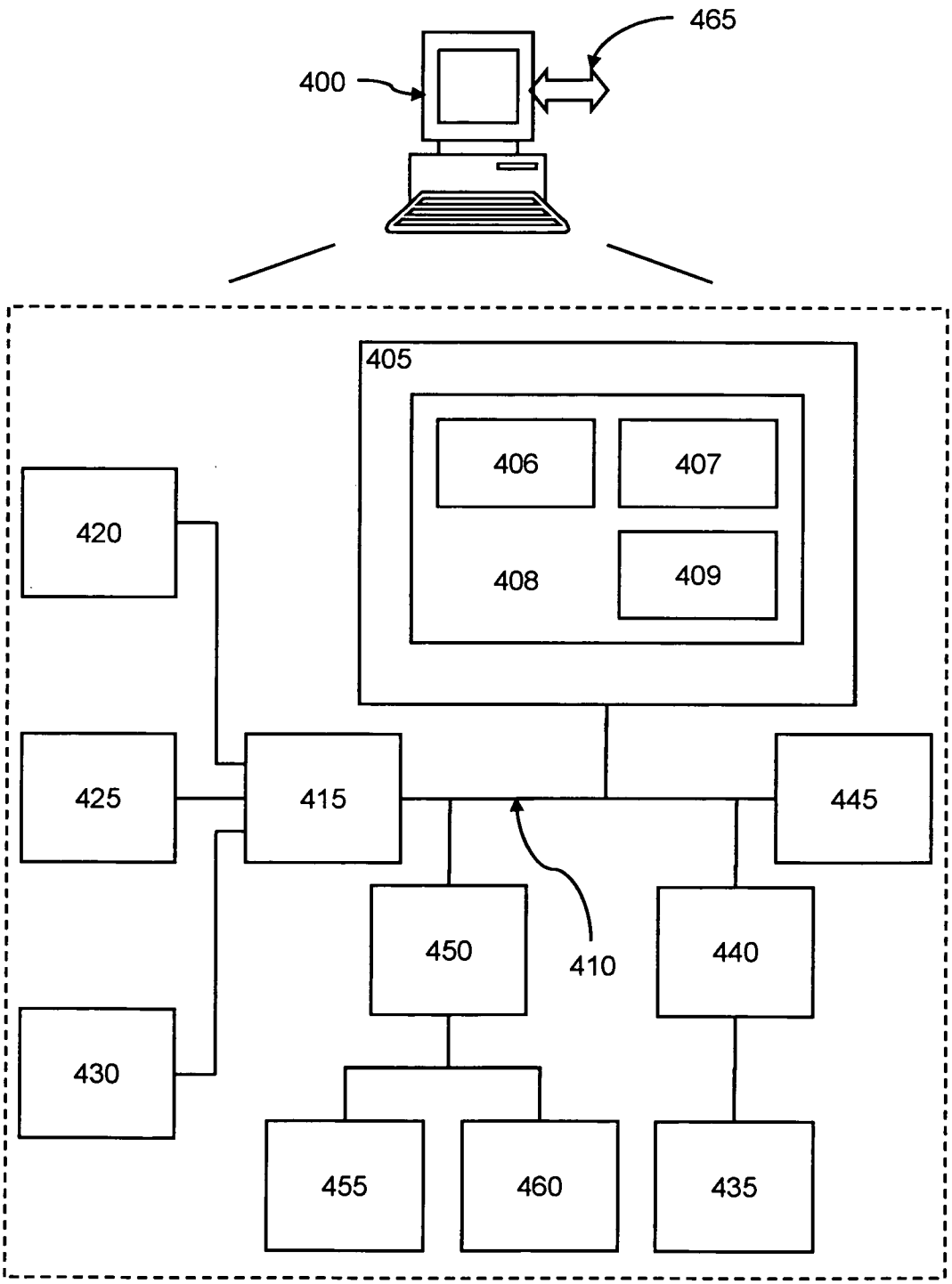
465
400
405
406
407
408
409
420
425
415
445
450
410
440
430
455
460
435

Fig. 4

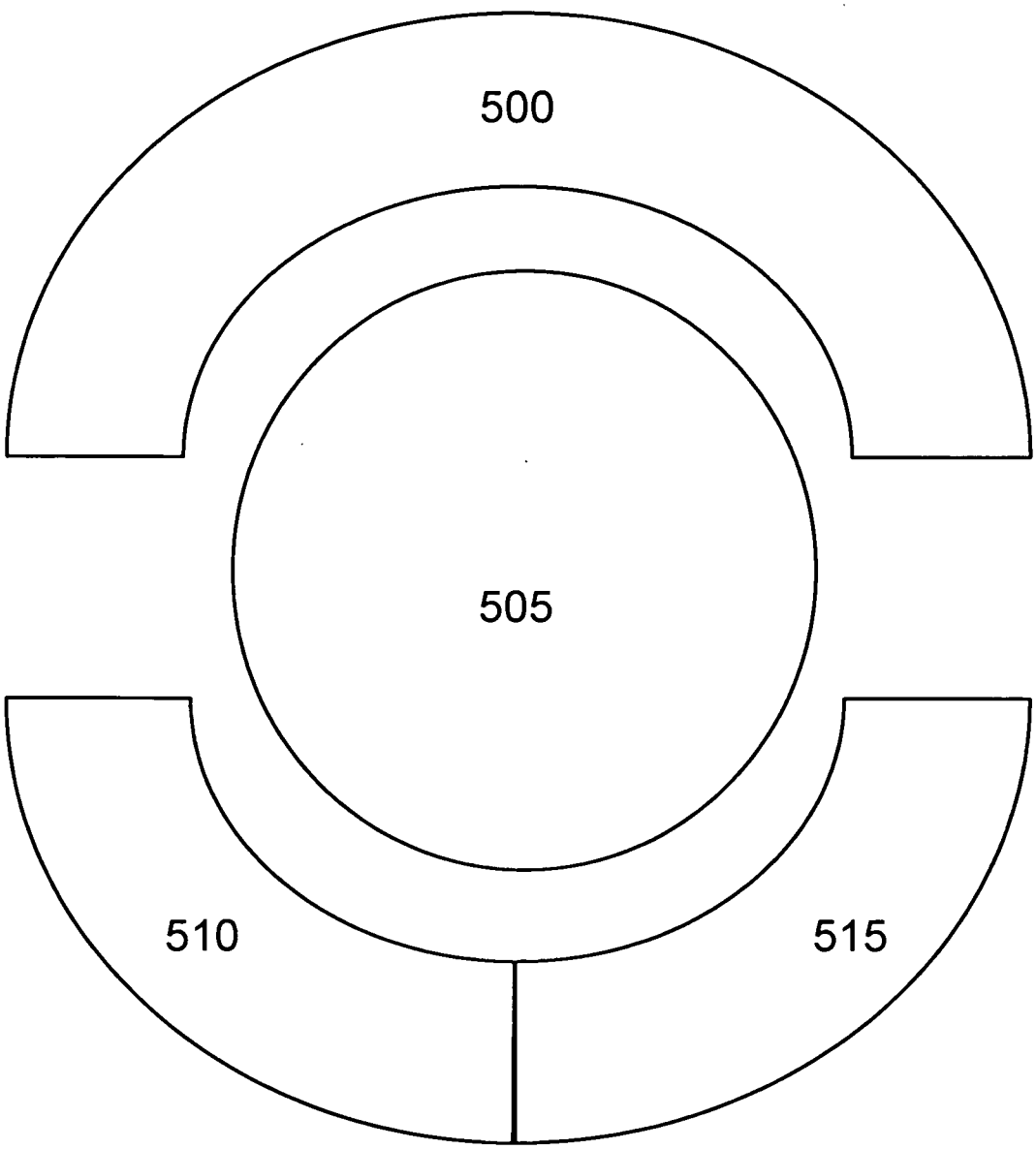

Fig. 5a

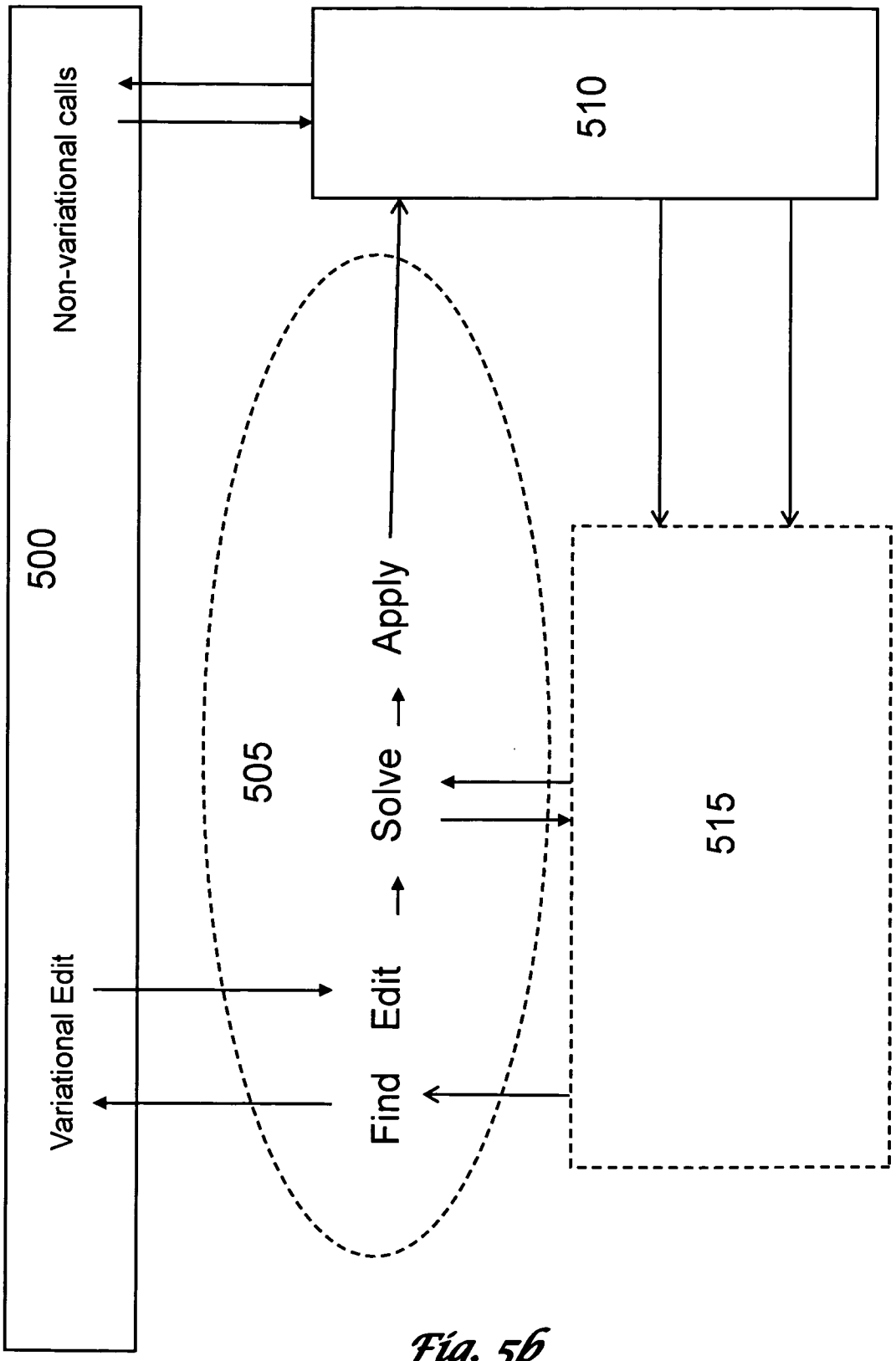
500
Non-variational calls
510
505
Apply
Solve
Edit
Find
Variational Edit
515

Fig. 5b

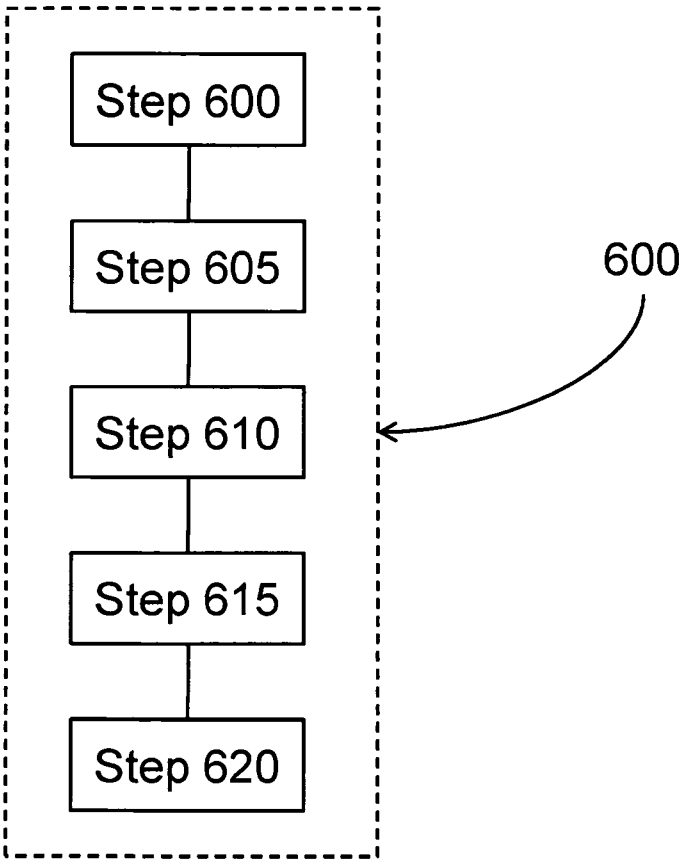

Fig. 6

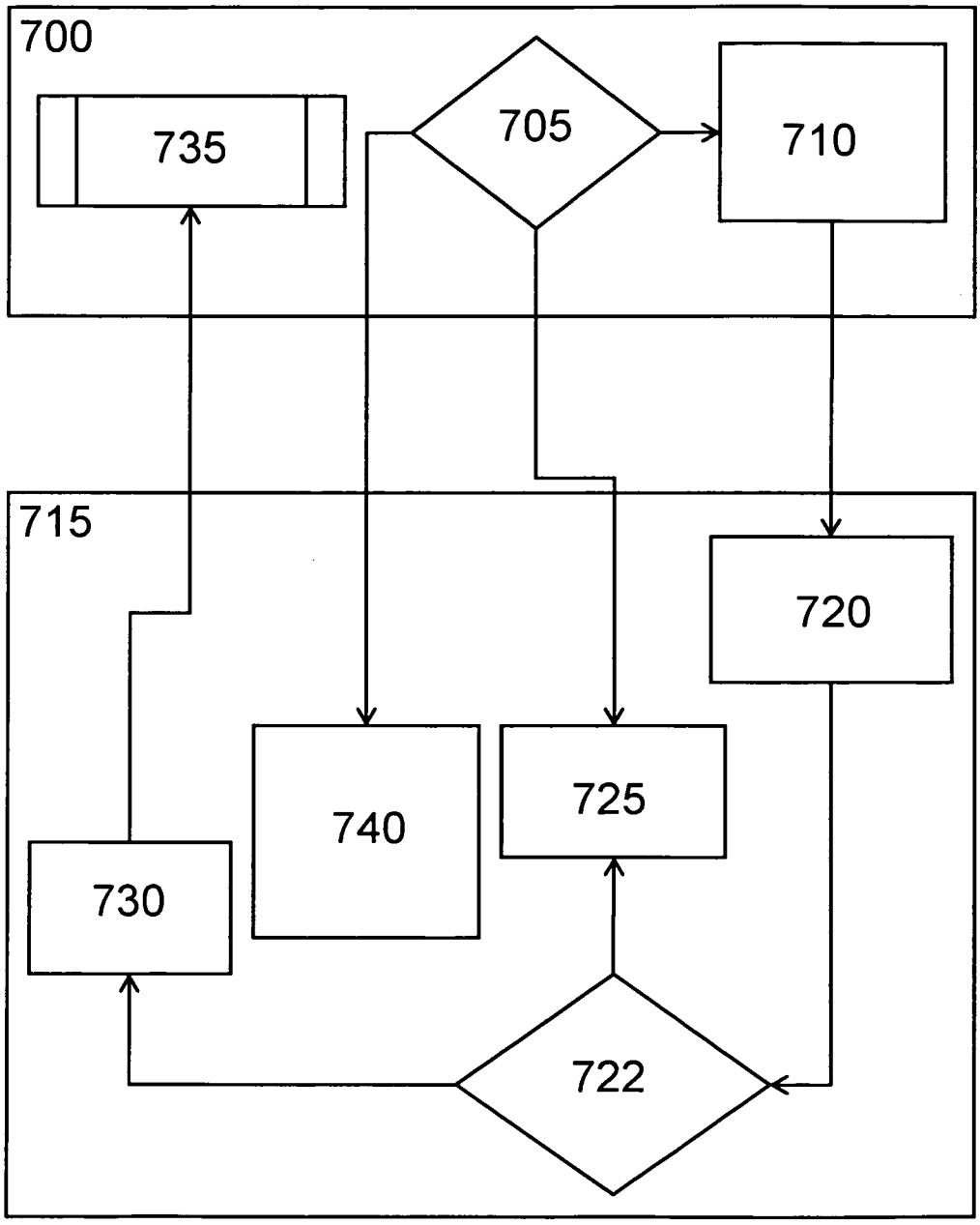

Fig. 7

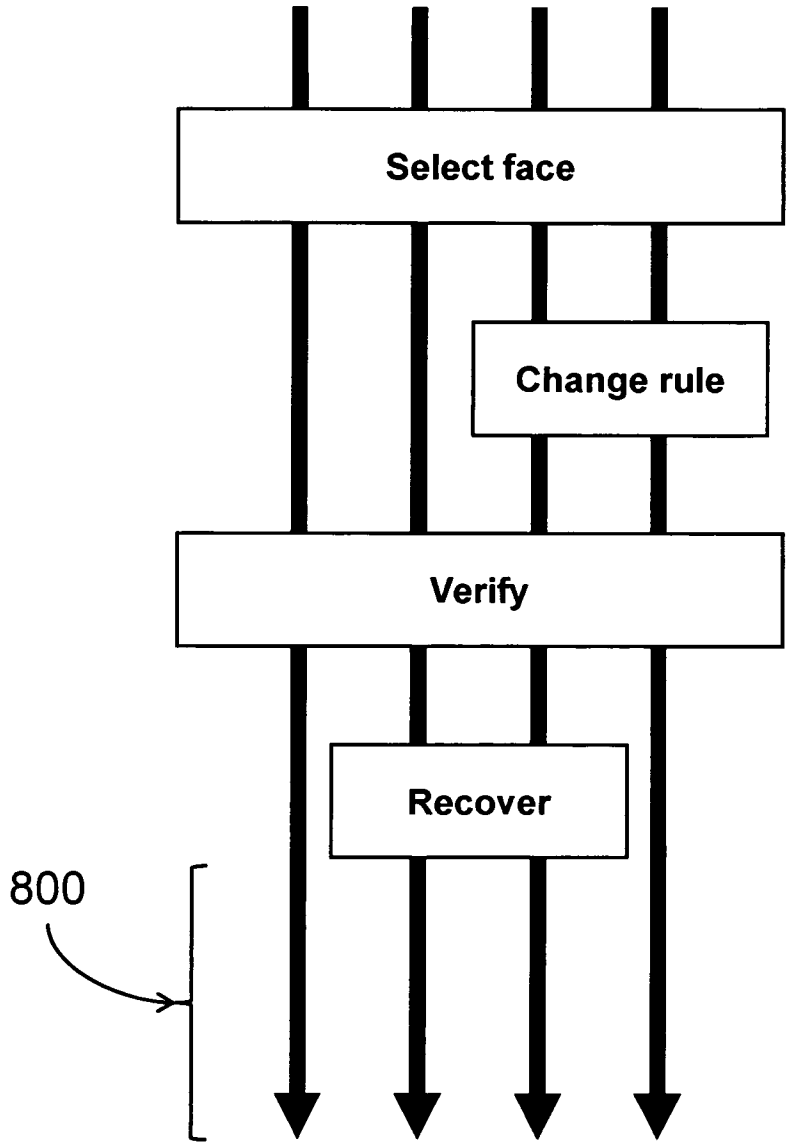

Fig. 8

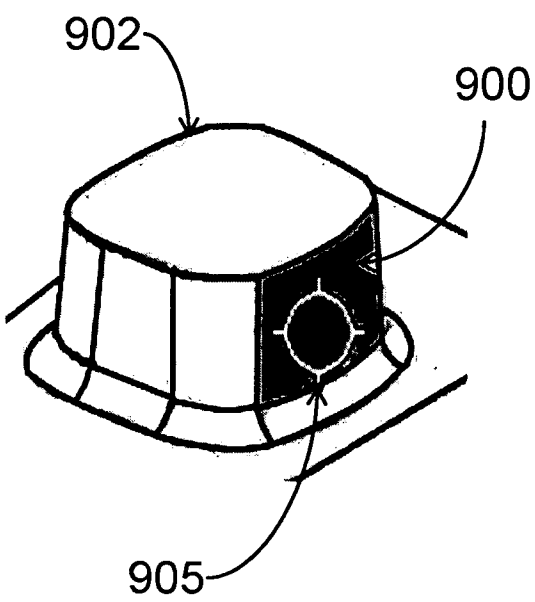

Fig. 9a

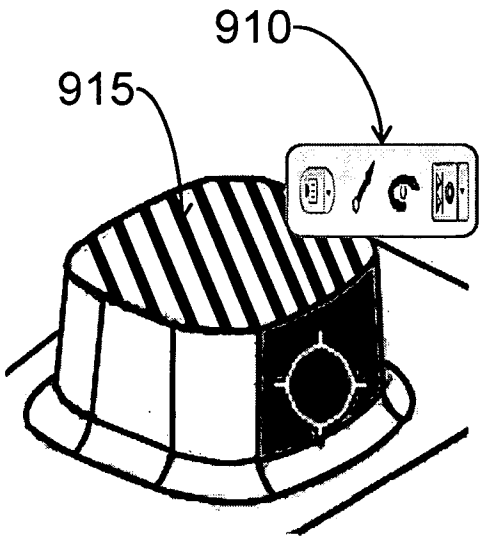

Fig. 9b

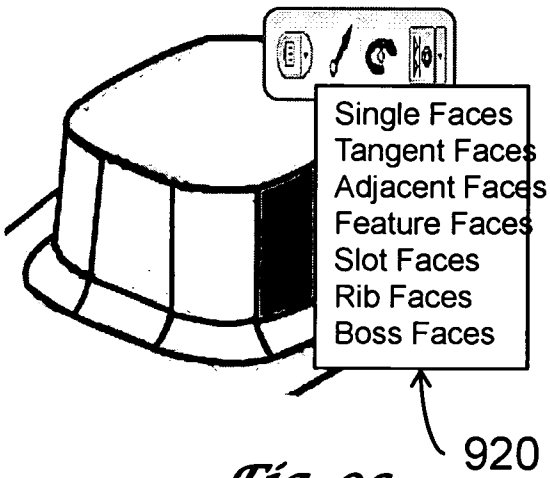

Fig. 9c

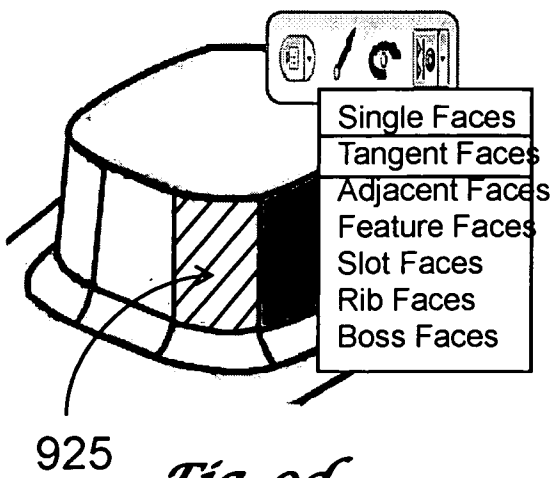

Fig. 9d

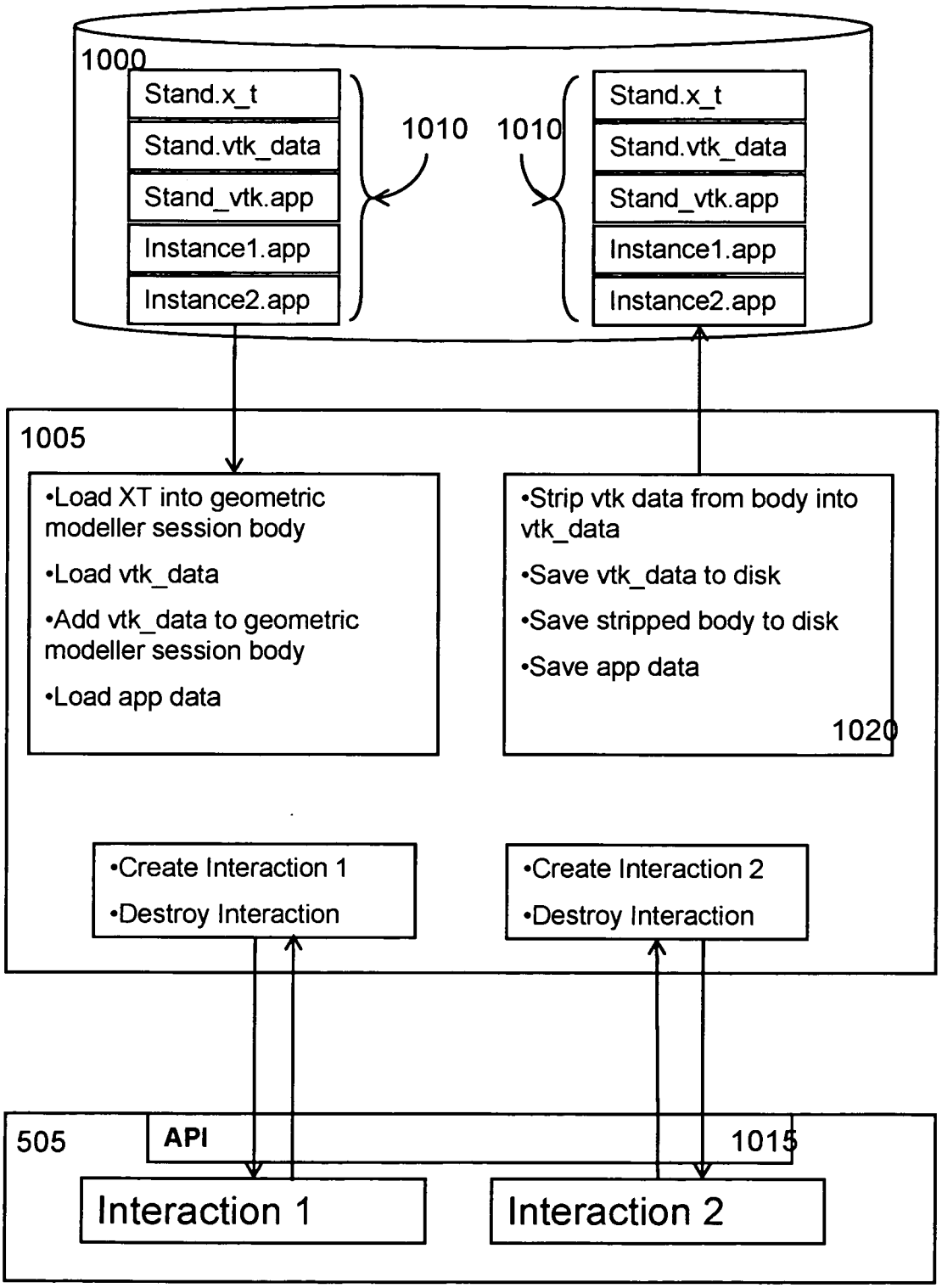
1000
Stand.x_t
Stand.vtk_data
Stand_vtk.app
Instance1.app
Instance2.app
1010
1010
Stand.x_t
Stand.vtk_data
Stand_vtk.app
Instance1.app
Instance2.app
1005
•Load XT into geometric modeller session body
•Load vtk_data
•Add vtk_data to geometric modeller session body
•Load app data
•Strip vtk data from body into vtk_data
•Save vtk_data to disk
•Save stripped body to disk
•Save app data
1020
•Create Interaction 1
•Destroy Interaction
•Create Interaction 2
•Destroy Interaction
505
API
1015
Interaction 1
Interaction 2

Fig. 10

INTERNATIONAL SEARCH REPORT

International application No
PCT/US2009/002328

A. CLASSIFICATION OF SUBJECT MATTER
INV. G06F17/50
ADD. G06F3/00 G06T17/00

According to International Patent Classification (IPC) or to both national classification and IPC

B. FIELDS SEARCHED

Minimum documentation searched (classification system followed by classification symbols)
G06F G06T

Documentation searched other than minimum documentation to the extent that such documents are included in the fields searched

Electronic data base consulted during the international search (name of data base and, where practical, search terms used)
EPO-Internal

C. DOCUMENTS CONSIDERED TO BE RELEVANT

Category*	Citation of document, with indication, where appropriate, of the relevant passages	Relevant to claim No.
X	ANONYMOUS: "Select Tool"[Online] 27 October 2006 (2006-10-27), pages 1-3, XP002541271 Retrieved from the Internet: URL:http://web.archive.org/web/20061027215357/http://download.sketchup.com/OnlineDoc/gsu_mac/H-Principle_Tools/PriTool-Select.htm> [retrieved on 2009-08-12] page 3, paragraph 6 ----- -/--	1-14

[X] Further documents are listed in the continuation of Box C.

[X] See patent family annex.

* Special categories of cited documents :

"A" document defining the general state of the art which is not considered to be of particular relevance

"E" earlier document but published on or after the international filing date

"L" document which may throw doubts on priority claim(s) or which is cited to establish the publication date of another citation or other special reason (as specified)

"O" document referring to an oral disclosure, use, exhibition or other means

"P" document published prior to the international filing date but later than the priority date claimed

"T" later document published after the international filing date or priority date and not in conflict with the application but cited to understand the principle or theory underlying the invention

"X" document of particular relevance; the claimed invention cannot be considered novel or cannot be considered to involve an inventive step when the document is taken alone

"Y" document of particular relevance; the claimed invention cannot be considered to involve an inventive step when the document is combined with one or more other such documents, such combination being obvious to a person skilled in the art.

"&" document member of the same patent family

Date of the actual completion of the international search	Date of mailing of the international search report
13 August 2009	27/08/2009

Name and mailing address of the ISA/	Authorized officer
European Patent Office, P.B. 5818 Patentlaan 2 NL – 2280 HV Rijswijk Tel. (+31-70) 340-2040, Fax: (+31-70) 340-3016	Sohrt, Wolfgang

INTERNATIONAL SEARCH REPORT

International application No
PCT/US2009/002328

C(Continuation). DOCUMENTS CONSIDERED TO BE RELEVANT

Category*	Citation of document, with indication, where appropriate, of the relevant passages	Relevant to claim No.
X	BJØRKLUND CHRISTER: "Maya Tutorial -Tennis Ball Modeling"[Online] 2 July 2004 (2004-07-02), pages 1-3, XP002541272 Retrieved from the Internet: URL:http://web.archive.org/web/20040702142319/http://christerb.com/tutorials/maya_modeltennisball/index.html> [retrieved on 2009-08-13] page 3, paragraph 1	1-14
A	EP 1 729 233 A (FUJITSU LTD [JP]) 6 December 2006 (2006-12-06) abstract	1-14
A	US 2003/067487 A1 (KOHLS SCOTT T [US] ET AL) 10 April 2003 (2003-04-10) abstract paragraphs [0086] - [0088]; figure 10	1-14
P,A	US 2009/024362 A1 (LINZIE BRIAN L [US]) 22 January 2009 (2009-01-22) abstract paragraph [0041]	1-14

INTERNATIONAL SEARCH REPORT

Information on patent family members

International application No
PCT/US2009/002328

Patent document cited in search report	Publication date	Patent family member(s)	Publication date
EP 1729233 A	06-12-2006	CN 1873647 A	06-12-2006
		JP 2006331328 A	07-12-2006
		KR 20060125532 A	06-12-2006
		US 2006267980 A1	30-11-2006
US 2003067487 A1	10-04-2003	NONE	
US 2009024362 A1	22-01-2009	WO 2009014870 A1	29-01-2009