Dec. 2, 1924.

F. W. TOBEY

1,517,267

DOOR FOR CASES AND CABINETS

Filed Jan. 23, 1922

2 Sheets-Sheet 1

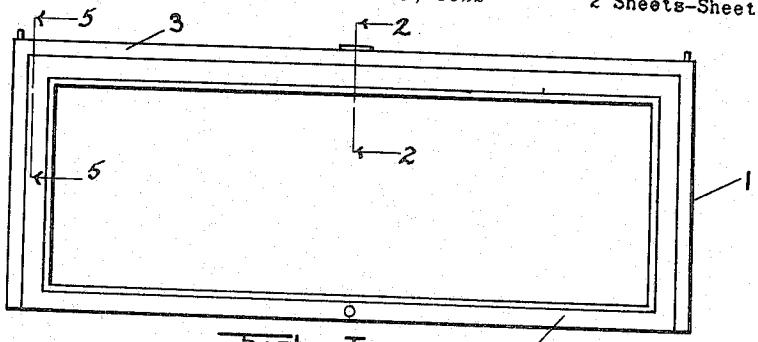

Fig. I.

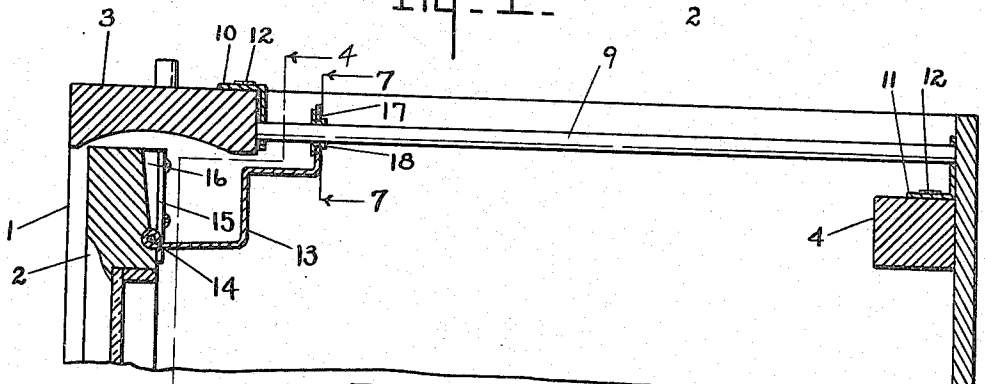

Fig. II.

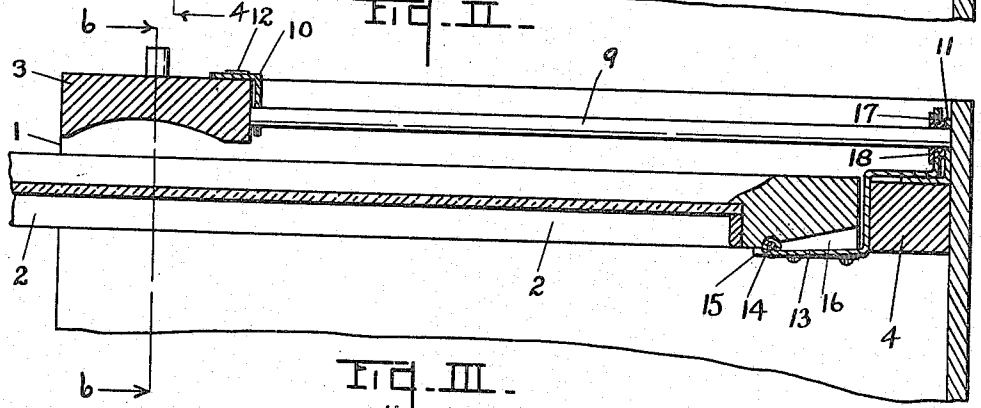

Fig. III.

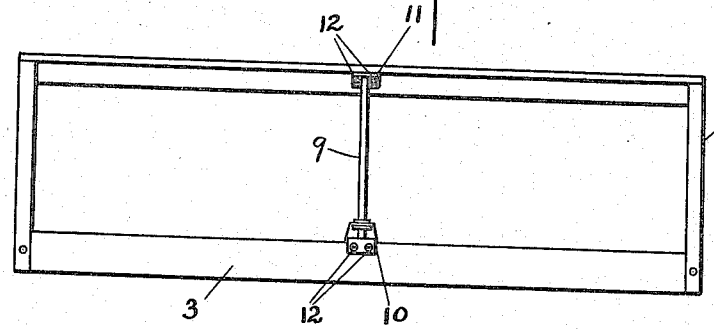

Fig. II A.

INVENTOR.

Fred W. Tobey

BY Chappell & Earl

ATTORNEYS

Dec. 2, 1924.

F. W. TOBEY

1,517,267

DOOR FOR CASES AND CABINETS

Filed Jan. 23, 1922

2 Sheets-Sheet 2

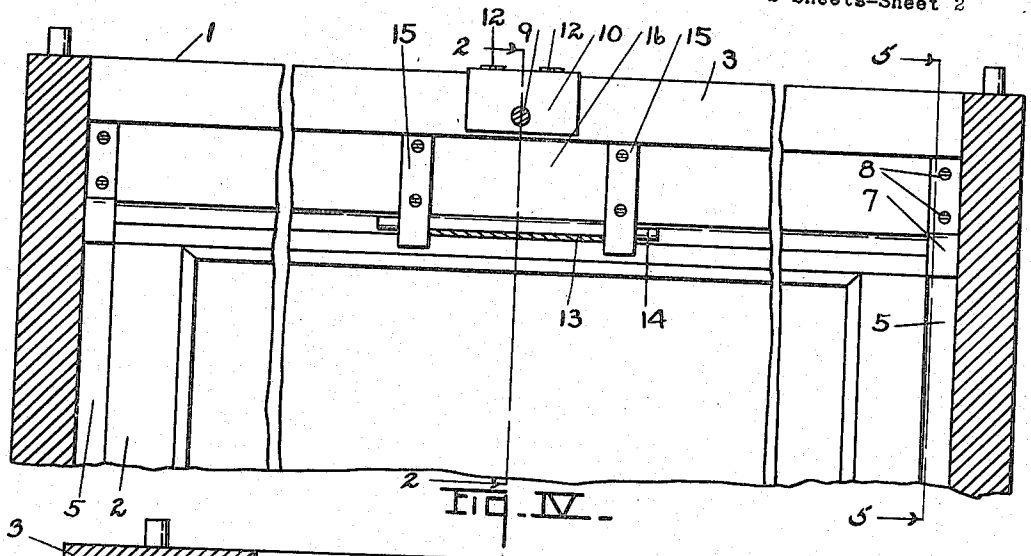

FIG. IV.

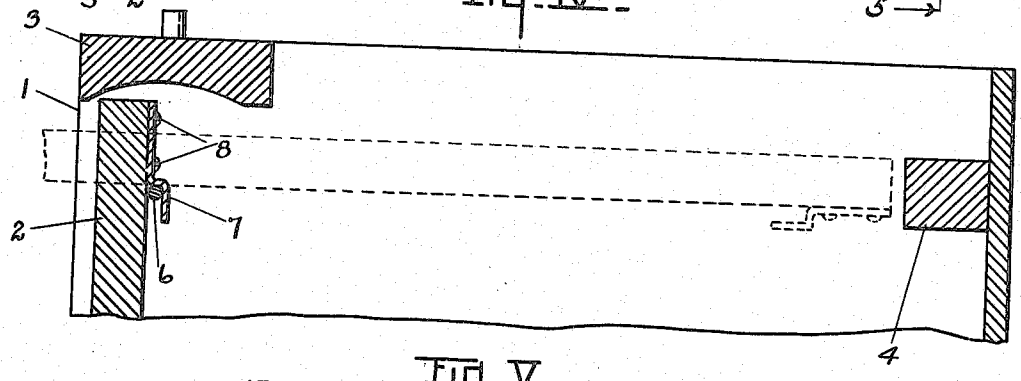

FIG. V.

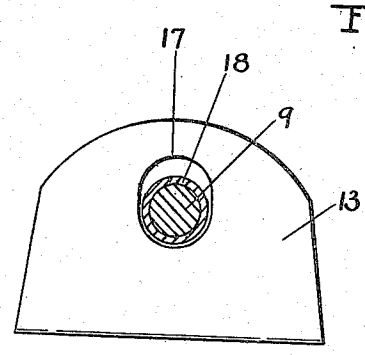

FIG. VII.

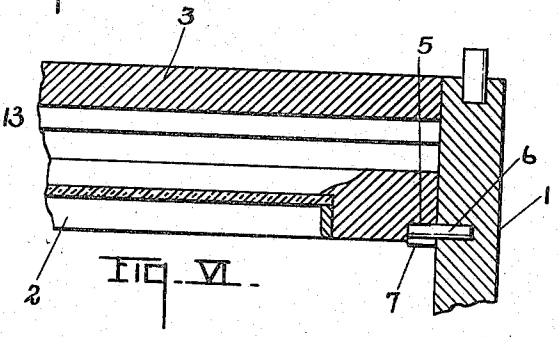

FIG. VI.

INVENTOR.
Fred W. Tobey
BY Chappell & Earl
ATTORNEYS

Patented Dec. 2, 1924.

1,517,267

UNITED STATES PATENT OFFICE.

FRED W. TOBEY, OF GRAND RAPIDS, MICHIGAN.

DOOR FOR CASES AND CABINETS.

Application filed January 23, 1922. Serial No. 531,225.

To all whom it may concern:

Be it known that I, FRED W. TOBEY, a citizen of the United States, residing at Grand Rapids, county of Kent, State of Michigan, have invented certain new and useful Improvements in Doors for Cases and Cabinets, of which the following is a specification.

This invention relates to improvements in doors for cases and cabinets.

The main objects of the invention are:

First, to provide an improved door for sectional bookcases and like cases or cabinets which is simple in its parts and easily assembled and at the same time effectively guides and equalizes the sliding movement of the door.

Second, to provide an improved guiding and supporting means for doors having a swinging and sliding movement which is very quiet in operation.

Further objects, and objects relating to structural details, will definitely appear from the detailed description to follow.

I accomplish the objects of my invention by the devices and means described in the following specification. The invention is clearly defined and pointed out in the claims.

A structure which is a preferred embodiment of my invention is clearly illustrated in the accompanying drawing, forming a part of this application, in which:

Fig. I is a front elevation of a bookcase section embodying the features of my invention.

Fig. II is a vertical section on a line corresponding to line 2—2 of Figs. I and IV with the lower part of the casing and door broken away, the door being shown in its closed position.

Fig. II^A is a plan view of a case embodying the features of my invention, with the door closed.

Fig. III is a detail section corresponding to that of Fig. II with the door in open position.

Fig. IV is a detail vertical longitudinal section on a line corresponding to line 4—4 of Fig. II.

Fig. V is a detail vertical section on a line corresponding to line 5—5 of Figs. I and IV, the door being shown in its retracted position by dotted lines.

Fig. VI is a detail section on a line corresponding to line 6—6 of Fig. III, showing details of the door support.

Fig. VII is an enlarged detail view on a line corresponding to line 7—7 of Fig. II, showing details of the guide means.

In the drawing similar reference characters refer to similar parts throughout the several views, and the sectional views are taken looking in the direction of the little arrows at the ends of the section lines.

Referring to the drawing, 1 represents a section of a sectional bookcase and 2 the door thereof. The structural details of these parts are not illustrated as they form no part of my present improvements.

The case is provided with a front bar 3 and has a horizontal cleat 4 secured on the inner side of its rear wall. The door 2 is rabbeted at 5 on its inner side to receive the pins 6 which project from the end walls. The hooks 7 are secured as by means of screws 8 at the rear ends of these rabbets 5 to coact with the pins when the door is in its extended position, the pins constituting pivots or pintles for the door, thus supporting the door for swinging movement.

A guide rod 9 is disposed horizontally and preferably in a central position, it being supported by brackets 10 and 11, the bracket 10 being mounted upon the front bar 3 by means of screws 12, while the bracket 11 is mounted upon the cleat 4, the ends of the rod being engaged with the bracket.

An angled guide member 13 is secured to the door by the horizontally disposed pivot 14, the pivot being carried by plates 15 and the door being recessed at 16, so that the guide may swing between the plates when the door is swung to horizontal position. The outer arm of this guide member has a vertical slot 17 therein through which the guide rod is arranged. A thimble-like sleeve 18 slidable upon the guide rod is loosely retained in the slot 17 by means of the flanges on the sleeve. This engagement of the guide member with the rod through the sleeve prevents binding and "chattering" as the door is slid into or withdrawn from the case. At the same time the door is very effectively guided and binding or wedging is prevented.

The parts are very easily assembled as the hook members 7 may be attached before the door is put into the case. The door is then slipped into position upon the pins 6

with the guide rod passed through the sleeve of the guide member. With the door in the position shown in Fig. II the bracket 10 is secured. The door is then moved rearwardly and the bracket 11 secured, thus properly centering and locating the rod.

The parts of my improvements are very economical to produce and, as stated, are quickly and easily assembled.

A door equipped with my improvements moves very quickly and easily without binding and with very little noise.

I have illustrated and described my improvements as I have embodied or adapted the same in sectional bookcases. I have not attempted to illustrate or describe other modifications or adaptations as I believe the disclosure made will enable those skilled in the art to which my invention relates to embody or adapt the same as may be desired.

Having thus described my invention, what I claim as new and desire to secure by Letters Patent, is:

1. The combination with a case provided with a front bar at the top thereof and with a horizontally disposed cleat on its rear wall, of a door, pins disposed on said case adjacent the front thereof, hooked hinged members mounted on said door to engage said pins and pivotally support the door when it is pulled to its forward position, said pins being positioned to slidably support said door when it is swung to a horizontal position, a transversely disposed guide rod, angled supporting brackets for said guide rod mounted on said front bar and on said cleat, an angled guide member pivoted to the rear side of the door by a horizontally disposed pivot and vertically slotted to receive said guide rod, plates mounted on said door to engage said guide member when the door is in its horizontal sliding position, and a sleeve slidable on said rod and loosely engaged in said slot of said guide member.

2. The combination with a case, of a door, pins disposed on said case adjacent the front thereof, hooked hinged members mounted on said door to engage said pins and pivotally support the door when it is pulled to its forward position, said pins being positioned to slidably support said door when it is swung to a horizontal position, a transversely disposed guide rod, an angled guide member pivoted to the rear side of the door by a horizontally disposed pivot and vertically slotted to receive said guide rod, and a sleeve slidable on said rod and loosely engaged in said slot of said guide member.

3. The combination with a case, a door, means for supporting and guiding said door comprising a guide rod mounted transversely of said case above said door, a guide member pivoted to the door and vertically slotted to receive said guide rod, and a thimble slidable on said rod and loosely engaged in said slot of said guide member.

In witness whereof, I have hereunto set my hand and seal.

FRED W. TOBEY. [L. S.]