(12) INTERNATIONAL APPLICATION PUBLISHED UNDER THE PATENT COOPERATION TREATY (PCT)

(19) World Intellectual Property Organization
International Bureau

(43) International Publication Date
1 March 2012 (01.03.2012)

PCT

(10) International Publication Number
WO 2012/024720 A1

(51) International Patent Classification:
A47J 27/06 (2006.01) *A47J 27/212* (2006.01)
A47J 27/56 (2006.01) *A47J 31/44* (2006.01)
A47J 41/00 (2006.01) *A47G 19/12* (2006.01)
A47J 27/21 (2006.01) *G01K 11/16* (2006.01)
A47J 27/57 (2006.01)

(21) International Application Number:
PCT/AU2011/001074

(22) International Filing Date:
22 August 2011 (22.08.2011)

(25) Filing Language: English

(26) Publication Language: English

(30) Priority Data:
2010903878 26 August 2010 (26.08.2010) AU

(72) Inventor; and
(71) Applicant : **MASTROYANIS, Perry** [AU/AU]; 248-246 Charles Street, Launceston, Tasmania 7250 (AU).

(74) Agents: **NEGLER, Justin** et al.; Davies Collison Cave, 1 Nicholson Street, Melbourne, Victoria 3000 (AU).

(81) Designated States *(unless otherwise indicated, for every kind of national protection available)*: AE, AG, AL, AM, AO, AT, AU, AZ, BA, BB, BG, BH, BR, BW, BY, BZ, CA, CH, CL, CN, CO, CR, CU, CZ, DE, DK, DM, DO, DZ, EC, EE, EG, ES, FI, GB, GD, GE, GH, GM, GT, HN, HR, HU, ID, IL, IN, IS, JP, KE, KG, KM, KN, KP, KR, KZ, LA, LC, LK, LR, LS, LT, LU, LY, MA, MD, ME, MG, MK, MN, MW, MX, MY, MZ, NA, NG, NI, NO, NZ, OM, PE, PG, PH, PL, PT, QA, RO, RS, RU, SC, SD, SE, SG, SK, SL, SM, ST, SV, SY, TH, TJ, TM, TN, TR, TT, TZ, UA, UG, US, UZ, VC, VN, ZA, ZM, ZW.

(84) Designated States *(unless otherwise indicated, for every kind of regional protection available)*: ARIPO (BW, GH, GM, KE, LR, LS, MW, MZ, NA, SD, SL, SZ, TZ, UG, ZM, ZW), Eurasian (AM, AZ, BY, KG, KZ, MD, RU, TJ, TM), European (AL, AT, BE, BG, CH, CY, CZ, DE, DK, EE, ES, FI, FR, GB, GR, HR, HU, IE, IS, IT, LT, LU, LV, MC, MK, MT, NL, NO, PL, PT, RO, RS, SE, SI, SK, SM, TR), OAPI (BF, BJ, CF, CG, CI, CM, GA, GN, GQ, GW, ML, MR, NE, SN, TD, TG).

Published:

— *with international search report (Art. 21(3))*

(54) **Title**: JUG WITH TEMPERATURE INDICATOR

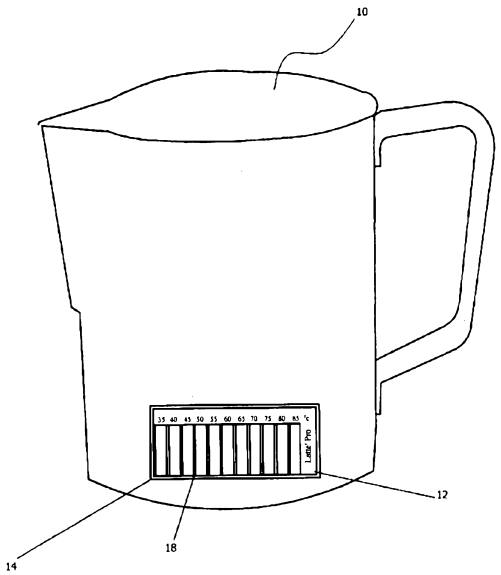

FIGURE 1

(57) **Abstract**: A multi-purpose jug with temperature indicator, wherein the jug is formed from a material having high thermal conductivity, including a liquid crystal thermometer attached to a side of the jug, the thermometer being arranged to indicate temperatures of liquid within the jug from 35 degrees Celsius to greater than 65 degrees Celsius, wherein the liquid crystal thermometer is in the form of a label adhered to the external side of the jug and is sealed with a layer of resin covering the label.

WO 2012/024720 A1

JUG WITH TEMPERATURE INDICATOR

Field of the Invention

The invention relates to a jug with a temperature indicator, and more particularly, but not exclusively, to a jug with a temperature indicator which is suitable for steaming milk in the process of preparing coffee for consumption.

Background of the Invention

It is known to prepare coffee beverage for consumption by steaming milk so as to make coffee beverages in the styles of cappuccino, cafe latte and the like. It is known that the temperature to which the milk is heated is critical in order to optimise the quality of the steamed milk. For this purpose, it is common to insert a separate conventional probe-type thermometer into the milk during steaming so that the milk can be brought to the correct temperature. However, using a probe type thermometer in this way can be inconvenient, and can also cause cross contamination.

US Patent No. 6,324,963 and Australian Patent No. 2009101190 have proposed milk frothing jugs with temperature indicators, however the applicant has identified that the utility of these previously proposed jugs is quite limited, and that the longevity may also be limited. More particularly, with reference to Australian Patent No. 2009101190, the milk frothing jug has a temperature indicator which indicates milk inside the jug being brought to only a single specific temperature. Also, the temperature indicator is attached to the jug in the form of a label which will deteriorate over time and will be likely to be separated from the jug through repeated use of the jug and repeated dishwasher cycles.

The applicant has identified that there are significant limitations to existing milk frothing jugs, and that it would be beneficial to provide an improved jug with temperature indicator which would be suitable for an expanded range of applications and would have an improved longevity.

Examples of the present invention seek to provide a jug with temperature indicator which overcomes or at least alleviates one or more disadvantages associated with previous milk frothing jugs.

Summary of the Invention

In accordance with one aspect of the present invention, there is provided a multi-purpose jug with temperature indicator, wherein the jug is formed from a material having high thermal conductivity, including a liquid crystal thermometer attached to a side of the jug, the thermometer being arranged to indicate temperatures of liquid within the jug from 35 degrees Celsius to greater than 65 degrees Celsius, wherein the liquid crystal thermometer is in the form of a label adhered to the external side of the jug and is sealed with a layer of resin covering the label.

Preferably, the material is stainless steel.

Preferably, the thermometer is arranged to indicate temperatures of liquid within the jug from 35 degrees Celsius to 85 degrees Celsius.

Preferably, the liquid crystal thermometer has a series of separate cells which indicate specific temperatures in predetermined intervals.

In accordance with another aspect of the present invention, there is provided a method of using a multi-purpose jug as described above, including the steps of heating/cooling water in the jug using the liquid crystal thermometer to bring the water to a temperature of approximately 35 degrees Celsius for making dough, and steaming milk in the jug using the liquid crystal thermometer to bring the milk to a temperature of approximately 65 degrees Celsius.

Brief Description of the Drawings

The invention is described, by way of non-limiting example only, with reference to the accompanying drawings, in which:

Figure 1 is a side view of a jug with temperature indicator in accordance with an example of the present invention;

Figure 2 is an opposite side view of the jug shown in Figure 1;

Figure 3 is a detailed view of the temperature indicator of the jug shown in Figures 1 and 2;

Figure 4 is a detailed cross-sectional view of the temperature indicator attached to the jug, in accordance with one example;

Figure 5 is a detailed cross-sectional view of the temperature indicator attached to the jug in accordance with another example;

Figure 6 is a detailed cross-sectional view of the temperature indicator attached to the jug in accordance with yet another example; and

Figure 7 is a detailed view of a lower portion of the jug shown in Figures 1 and 2.

Detailed Description

With reference to Figures 1 to 7 of the drawings, there is shown a jug 10 with a temperature indicator 12 which is suitable for frothing milk in the preparation of coffee beverages for consumption. The jug 10 is formed from a material having high thermal conductivity, and includes the temperature indicator 12 in the form of a liquid crystal thermometer 14 attached to an external side of the jug 10. The thermometer 14 is arranged

to indicate temperatures of liquid within the jug 10 from 35°C to greater than 65°C. The liquid crystal thermometer 14 is in the form of a label adhered to the external side of the jug 10, and is sealed with a layer of resin 16 covering the label.

In the example of the invention depicted in the drawings, the material of the jug 10 is stainless steel, which has high thermal conductivity such that the temperature of the liquid within the jug is readily transmitted to the liquid crystal thermometer 14 such that the temperature shown on the thermometer 14 is accurate. The example depicted in the drawings has the liquid crystal thermometer 14 arranged to indicate temperatures of liquid within the jug 10 from 35°C to 85°C. More specifically, the liquid crystal thermometer 14 has a series of separate cells 18 which indicate specific temperatures in predetermined intervals. The arrangement shown has sufficient cells 18 to indicate temperatures in 5°C intervals from the lower bound of 35°C to the upper bound of 85°C, with each cell being associated with a specific temperature. However, due to the nature of operation of the cells 18, temperatures within each interval can be identified by the change in appearance, particularly in the change of colour, of the neighbouring cell or cells 18.

Although the preferred example depicted in the drawings has the lower bound of 35°C and the upper bound of 85°C, it will be appreciated by people skilled in the art that different values may be used provided the range of 35°C to 65°C is accounted for. In particular, the applicant has identified that it would be useful for the jug 10 to have utility in identifying the correct temperature of water to be used in the preparation of dough, for example for making pizza or bread. For this application, the optimum temperature is just greater than 35°C, that being the temperature at which yeast will start to react. It is important for the temperature to be accurate, as yeast will die in temperature above 45°C to 50°C. In addition to being useful for identifying the correct temperature of water for the preparation of dough, the jug 10 is also useful for identifying the correct temperature of steamed milk for the preparation of coffee beverages, which has been found to be in the order of 65°C.

Figure 3 shows a detailed view of the liquid crystal thermometer 14 in which the cell 18a associated with the temperature of 60°C may be represented in a different colour, or may change to a different colour, so that the user can readily identify that the frothed milk is at the correct temperature. In a similar manner, the cell associated with the temperature of 35°C and/or the cell associated with the temperature of 40°C may be coloured differently so that the user may also readily identify the correct temperature in the preparation of water for making dough. The liquid crystal thermometer 14 may be labelled with a brand such as "Latte pro", as shown.

Figures 4 to 6 show different examples of detailed cross-sectional views of attachment of the liquid crystal thermometer 14 to the jug 10. In each example, a layer of resin 16 is used to cover the liquid crystal thermometer 14 so as to prevent it from being removed during repeated cycles of use of the jug 10, which will include fluctuations in temperatures and harsh conditions, particularly in dishwashers. Specifically, in Figure 4, the liquid crystal thermometer 14 is housed within an indentation 20 formed in a side of the jug 10 with the layer of resin 16 being applied over the liquid crystal thermometer so as to be flush with the surrounding surface of the jug 10. With reference to Figure 5, the jug 10 is provided with a stainless steel frame 22 which surrounds and protects the liquid crystal thermometer 14. In this case, the resin 16 is formed in a layer which is flush with the surrounding frame 22. In Figure 6, the liquid crystal thermometer 14 is applied to the side of the jug 10, without an indentation or a frame 22. In this case, the liquid crystal thermometer 14 is covered by a layer of resin 16 which extends over each extremity of the liquid crystal thermometer 14 so as to protect the thermometer 14 from inadvertent removal.

Figure 7 shows a detailed side view of a lower portion of the jug 10 with the liquid crystal thermometer 14 attached.

While various embodiments of the present invention have been described above, it should be understood that they have been presented by way of example only, and not by way of limitation. It will be apparent to a person skilled in the relevant art that various

changes in form and detail can be made therein without departing from the spirit and scope of the invention. Thus, the present invention should not be limited by any of the above described exemplary embodiments.

The reference in this specification to any prior publication (or information derived from it), or to any matter which is known, is not, and should not be taken as an acknowledgment or admission or any form of suggestion that that prior publication (or information derived from it) or known matter forms part of the common general knowledge in the field of endeavour to which this specification relates.

Throughout this specification and the claims which follow, unless the context requires otherwise, the word "comprise", and variations such as "comprises" and "comprising", will be understood to imply the inclusion of a stated integer or step or group of integers or steps but not the exclusion of any other integer or step or group of integers or steps.

THE CLAIMS DEFINING THE INVENTION ARE AS FOLLOWS:

1. A multi-purpose jug with temperature indicator, wherein the jug is formed from a material having high thermal conductivity, including a liquid crystal thermometer attached to a side of the jug, the thermometer being arranged to indicate temperatures of liquid within the jug from 35 degrees Celsius to greater than 65 degrees Celsius, wherein the liquid crystal thermometer is in the form of a label adhered to the external side of the jug and is sealed with a layer of resin covering the label.

2. A multi-purpose jug as claimed in claim 1, wherein the material is stainless steel.

3. A multi-purpose jug as claimed in claim 1 or claim 2, wherein the thermometer is arranged to indicate temperatures of liquid within the jug from 35 degrees Celsius to 85 degrees Celsius.

4. A multi-purpose jug as claimed in any one of claims 1 to 3, wherein the liquid crystal thermometer has a series of separate cells which indicate specific temperatures in predetermined intervals.

5. A method of using a multi-purpose jug as claimed in any one of claims 1 to 4, including the steps of heating/cooling water in the jug using the liquid crystal thermometer to bring the water to a temperature of approximately 35 degrees Celsius for making dough, and steaming milk in the jug using the liquid crystal thermometer to bring the milk to a temperature of approximately 65 degrees Celsius.

6. A multi-purpose jug with temperature indicator substantially as hereinbefore described with reference to the accompanying drawings.

7. A method of using a multi-purpose jug substantially as hereinbefore described with reference to the accompanying drawings.

5

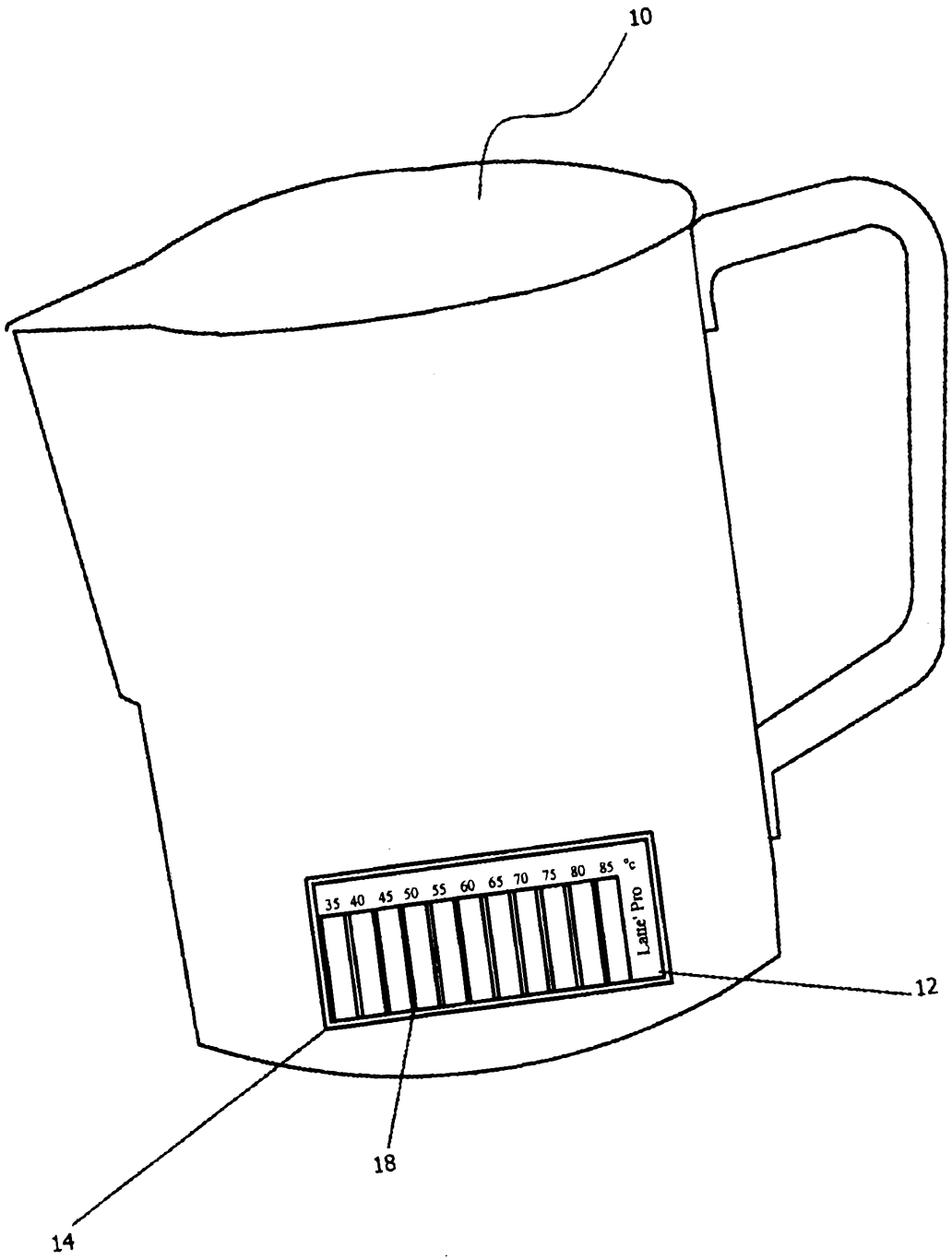

FIGURE 1

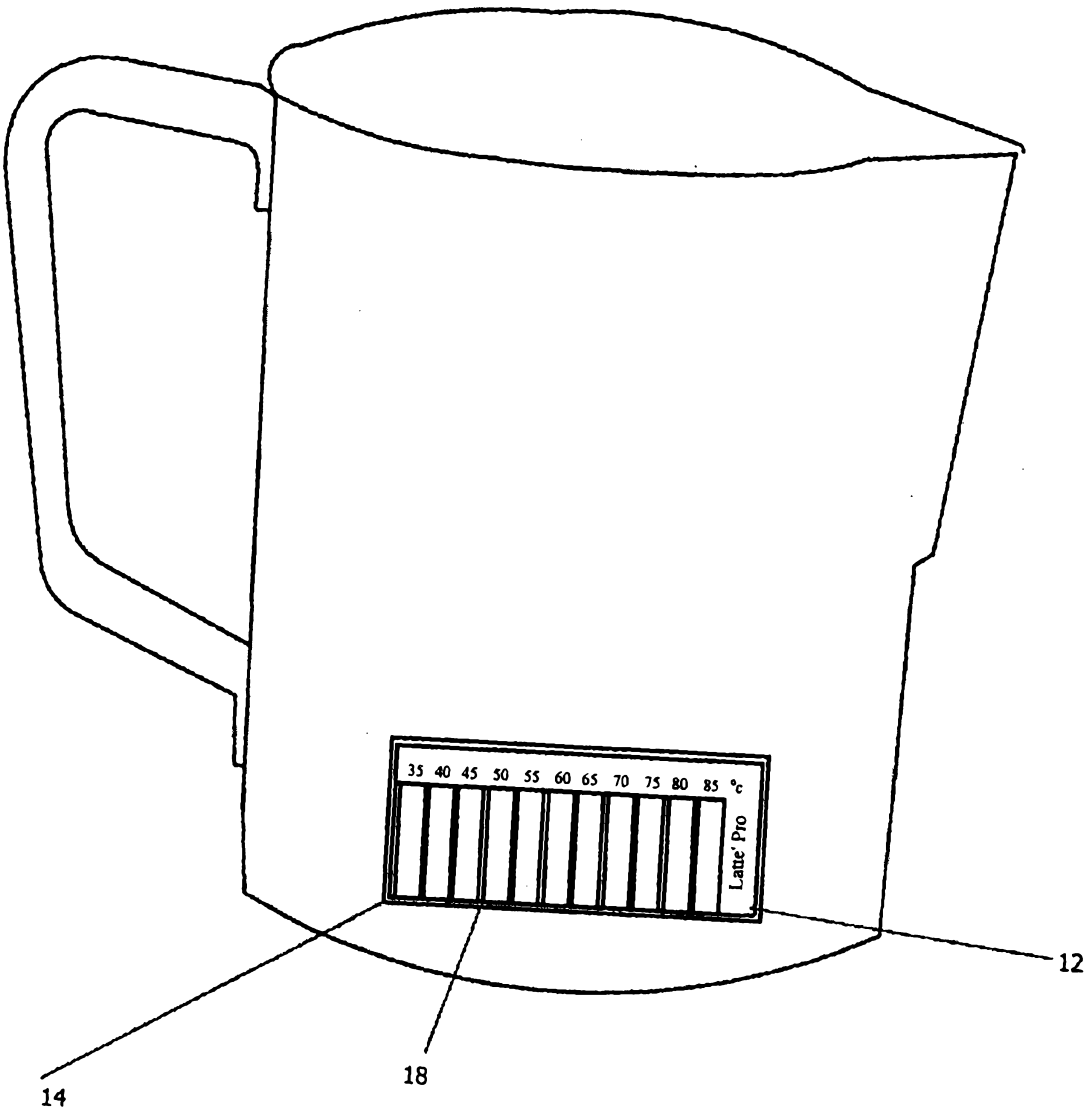

FIGURE 2

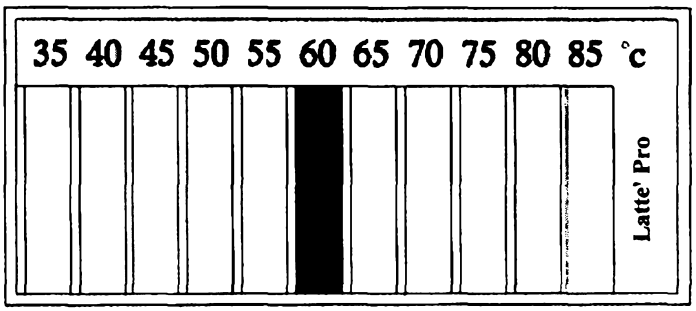

FIGURE 3

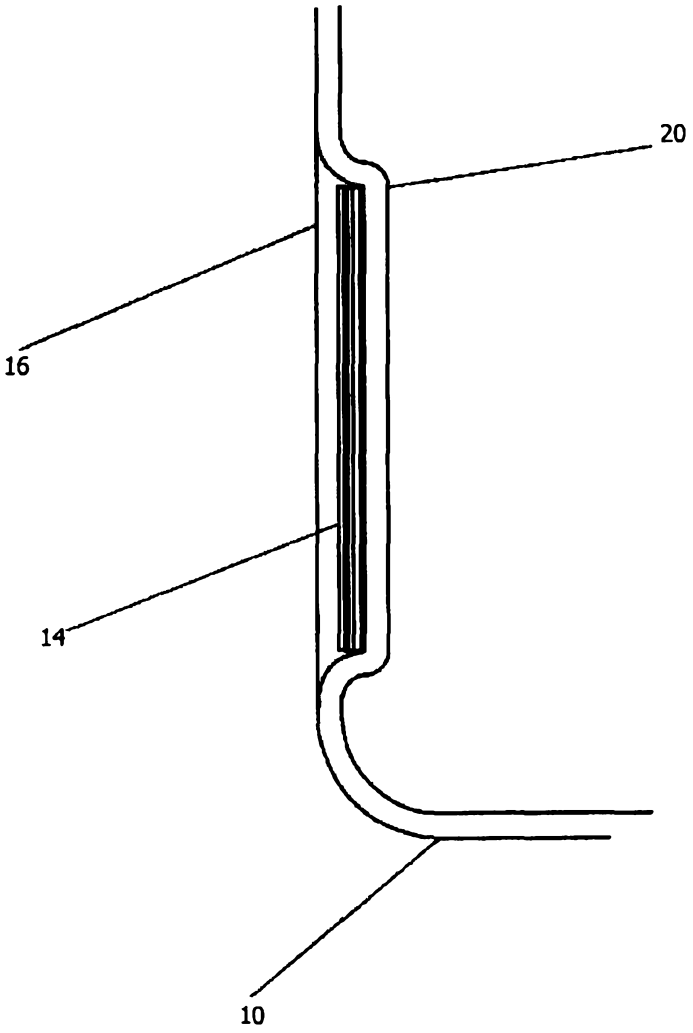

FIGURE 4

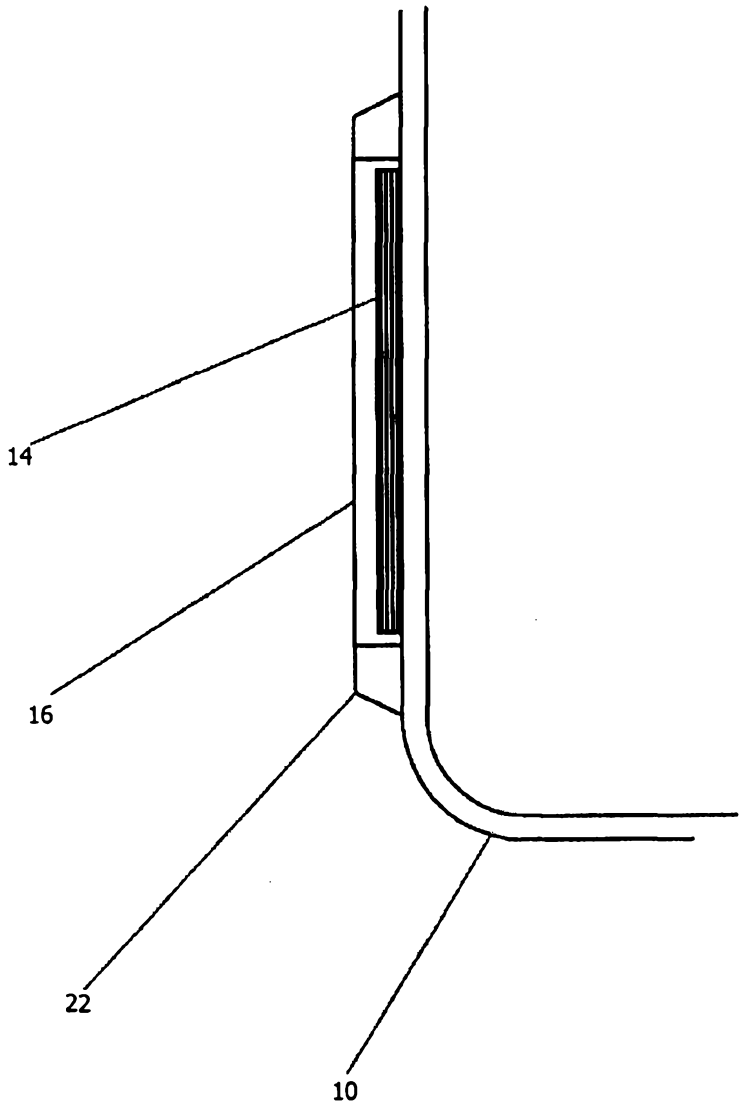

FIGURE 5

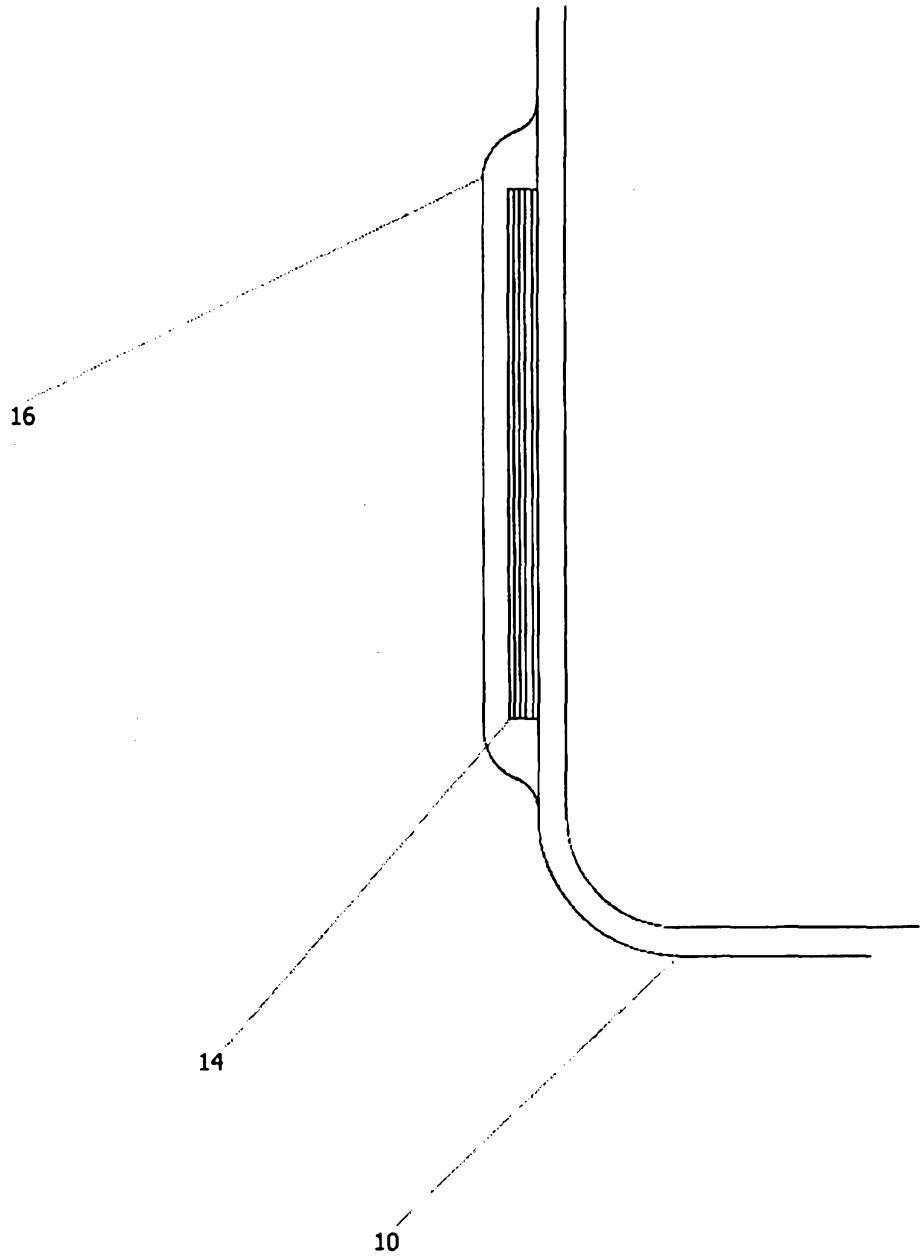

FIGURE 6

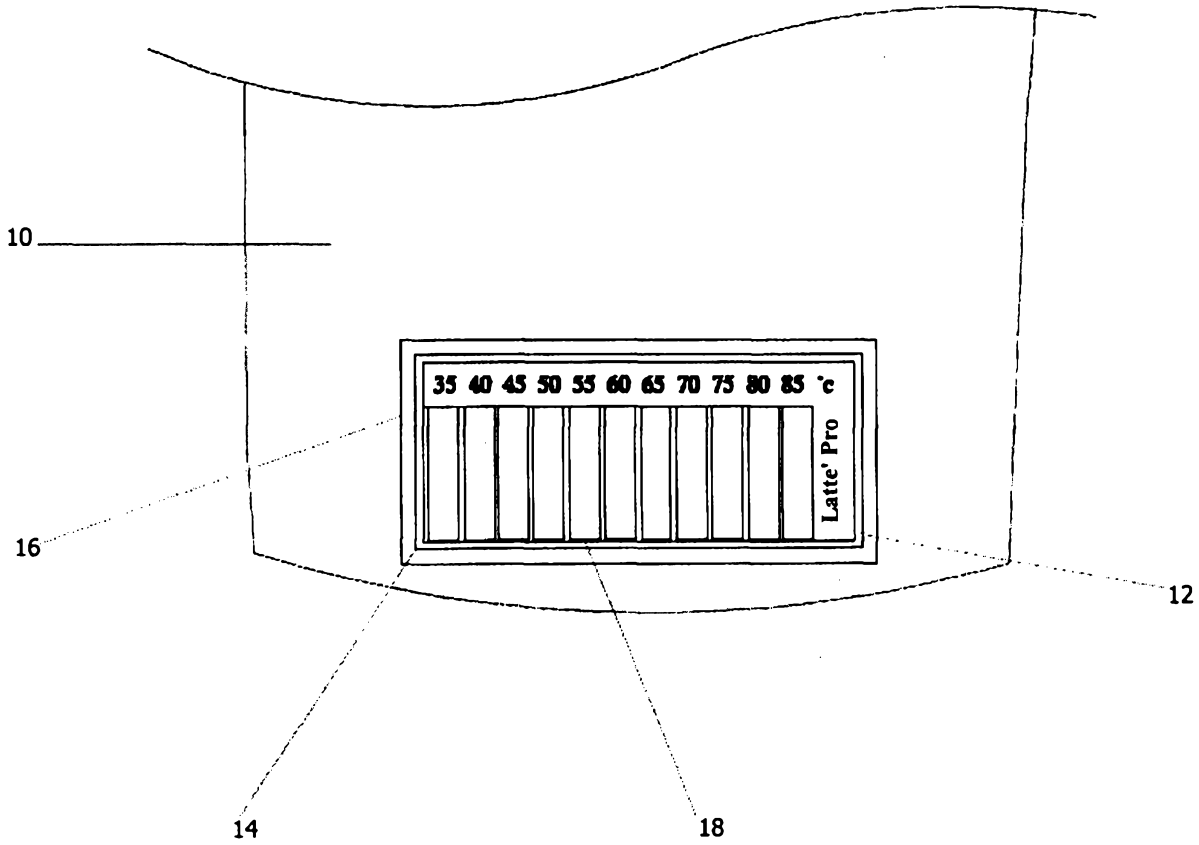

FIGURE 7