July 9, 1935. S. J. HARLEY 2,007,717

FORM GRINDING

Filed Jan. 13, 1933

Fig. 1a.

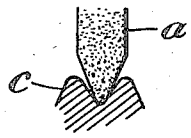

Fig. 1.

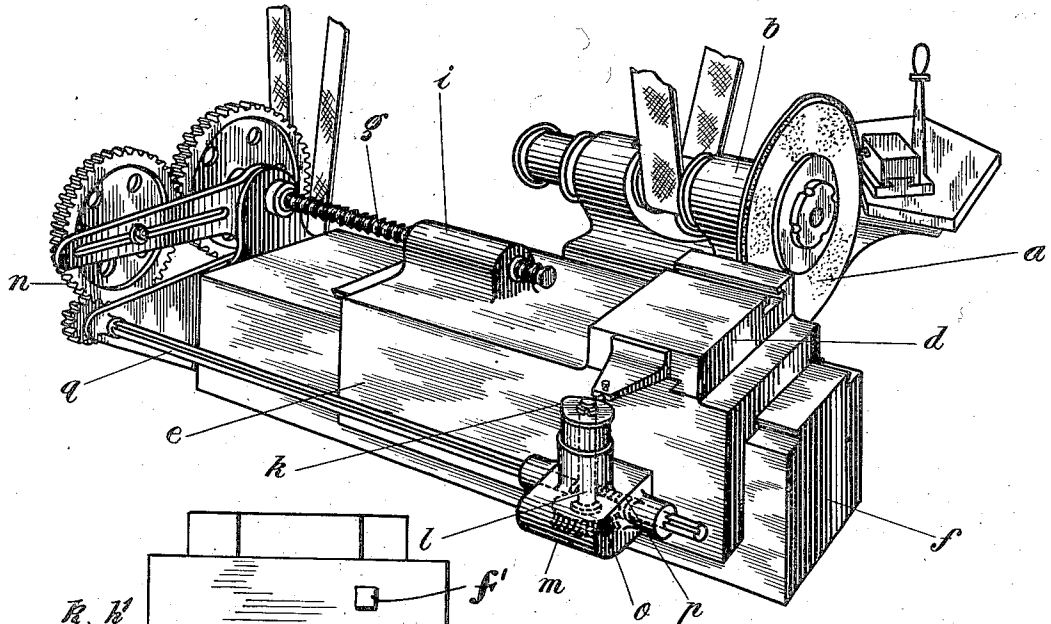

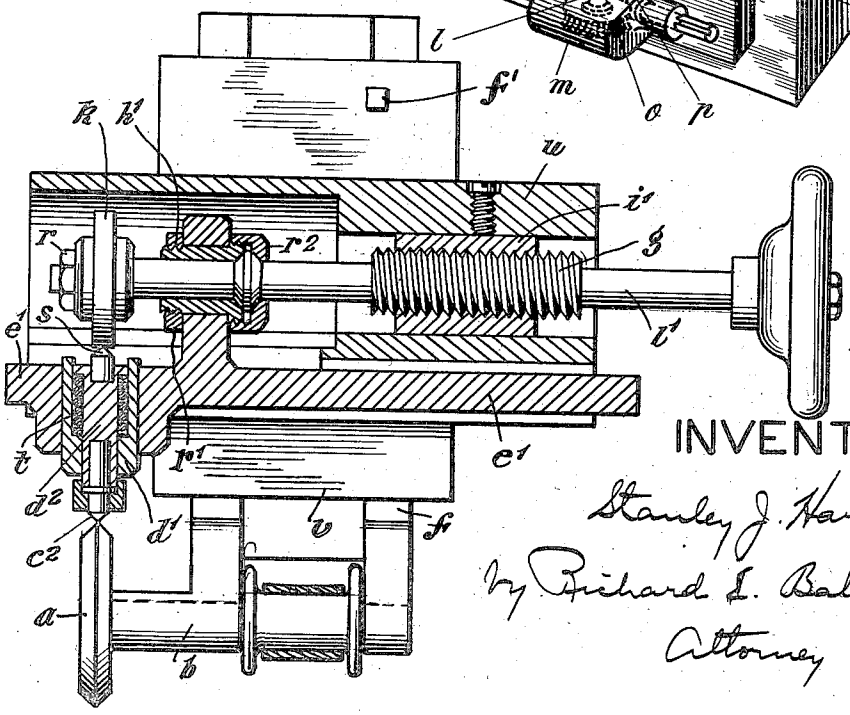

Fig. 2.

INVENTOR

Stanley J. Harley

By Richard L. Babcock

Attorney

Patented July 9, 1935 2,007,717

UNITED STATES PATENT OFFICE

2,007,717

FORM GRINDING

Stanley Jaffa Harley, Stivichall, Coventry, England

Application January 13, 1933, Serial No. 651,597
In Great Britain January 19, 1932

3 Claims. (Cl. 51—93)

This invention relates to form grinding, including the formation of the operating surface of the grinding wheel itself as well as the formation or finishing of the work-piece thereby.

According to this invention the form which it is desired to give to the wheel or to the work-piece is in each case the resultant of two movements which take place simultaneously in two directions at an angle to each other. That is to say, it is a generated form as distinguished from that derived from the employment of a master or former.

These two movements are imparted respectively to the wheel or to the wheel cutter when forming the wheel, and to the wheel or work-piece when forming the latter. Or one movement can be given to the wheel and the other movement to the wheel cutter or to the work-piece as the case may be, said movements in each case being timed and of such relative and respective extent as to produce the form required.

In order that the invention may be clearly understood and readily carried into practical effect, reference is made in the following description to the accompanying drawing, in which,

Figure 1 is a perspective view of a form-grinding machine constructed in accordance with one way of carrying out the invention.

Figure 1*a* is a sectional detail view illustrating a portion of the wheel and the work-piece.

Figure 2 is a sectional view of a modified form-grinding machine embodying the present invention.

Throughout the drawing corresponding parts are designated by similar reference characters.

In the embodiment of the invention illustrated in Figure 1 the grinding wheel *a* is rotatably mounted in stationary bearings *b* so that it rotates in a plane which is fixed in relation to the wheel cutter or to the work-piece *c* which is not seen in Figure 1 but is shown in Figure 1*a*. The cutter or the work-piece, as the case may be, is carried by a carrier *d* which is arranged for movement relatively to the grinding wheel *a* in two directions simultaneously, the combined effect of which is to cause the wheel cutter or the work-piece *c*, whilst in contact with the wheel, as seen in Figure 1*a*, to move so that the locus of any point in the cutter or work-piece is that of the form it is desired to produce in the wheel or in the work-piece.

The longitudinal or feed movement of the carrier *d*, that is to say, in the direction at right angles to the plane of rotation of the grinding wheel, may be produced either by means of relative movement between a lead screw and nut or by means of a cam. For this purpose the carrier *d* is slidably mounted upon a saddle or slide *e* arranged to reciprocate along the bed *f* of the machine in a direction parallel with the axis of the grinding wheel. Carrier *d* is mounted on saddle or slide *e* for sliding movement relative thereto and at right angles to the path of movement thereof. Where a lead screw *g* is used it is rotatably mounted at one end in a bearing carried by the bed of the machine and is adapted for rotation by hand or by power. The threaded end of the lead screw works in a tapped boss *i* on the slide *e*, the return movement of which can be obtained by reversing the direction of rotation of the lead screw, preferably at a higher speed than for the forward or feed movement.

The simultaneous reciprocation of the carrier *d* in the direction at right angles to the rotational axis of the grinding wheel is preferably produced by means of a cam *k* the spindle *l* of which is rotatably mounted in a bracket *m* carried by the saddle or slide *e*. The form and rotational speed of this cam will be determined by the nature of the form to be ground. The said cam may be driven through suitable reduction gear *n*, which can be varied at will, from the spindle of the lead screw, or cam, which is responsible for the feed movement of the slide. For this purpose the spindle *l* of the cam *k*, which produces the reciprocatory movement of the saddle or slide *e*, may carry a worm wheel *o* meshing with a worm *p* which is suitably mounted on a feather on a shaft *q* which is driven by the reduction gear aforesaid.

A modified form of machine embodying the same principles as those above described but of a more compact and simple construction is shown in Figure 2. In this case, as will be seen, the lead screw *g* and the cam *k* which control the two simultaneous movements of the carrier d^2 are carried by the same shaft l^1. This shaft which is adapted for rotation by hand and is mounted in a bearing h^1 carried by the slide *e'*, is arranged so that by unscrewing the nuts *r*, r^1, r^2 it can be readily removed and replaced by another shaft carrying a lead screw of a different pitch. The cam can also be changed if required.

The carried d^2 carrying the wheel cutter or the workpiece, as the case may be, is mounted to slide freely in a fitting d^1 fixed in the slide *e'* and is normally held with the stylus *s* in constant contact with the cam *k* by means of a spring *t*. As before, the cam reciprocates the carrier d^2 in a direction at right angles to the axis of the

grinding wheel a whilst the slide e' moves the carrier d^2 simultaneously in a direction at right angles to the plane of rotation of the grinding wheel. The lead screw works in a screw threaded sleeve i^1 which is removably mounted in a frame u fixed to the saddle v and carries the relatively movable feed slide e'.

In this modified form illustrated in Figure 2 the slide e' is movable in a direction which will move the carrier d^2 across the face of the grinding wheel a and to this end is slidably mounted in the frame u which is fixed to the saddle v. The saddle v may be held in fixed position on the bed f of the machine in any known suitable manner, as by a locking screw f', and the work support, which is not shown but may be of any usual and suitable known construction, is interchangeable with the cutter c^2 in the carrier d^2, said work holder being held by the carrier d^2 in the same manner as is said cutter c^2.

Where, in each of the machines above described the form to be produced is that of a screw thread chaser, see Figure 1a, the ratio of the feed and reciprocatory movements of the carrier carrying the wheel cutter or the work-piece, will be such that whilst the feed slide e moves through a distance equal to the pitch of the screw thread, the cam k, which reciprocates the carrier, makes one complete revolution.

I claim:—

1. A grinding machine for the purposes described comprising a grinding wheel, a fixed frame, a slide movable therein in a direction parallel with the rotational axis of said wheel, a carrier adapted to carry a wheel cutter or the work-piece and to reciprocate towards and away from the said axis, a spindle rotatably mounted in and movable with the slide, a lead screw on said spindle, a sleeve nut on said fixed frame adapted for coaction with said lead screw, and a cam on said spindle adapted to move the carrier towards the axis of the grinding wheel.

2. A grinding machine for the purposes described comprising a rotatable grinding wheel, a stationary bed plate, a slide movable along said bed plate in a direction parallel with the rotational axis of said grinding wheel, a rotatable screw for operating said slide, a carrier adapted to carry a grinding wheel cutter or the work-piece and movable on said slide towards and away from the axis of said grinding wheel, a cam rotatably mounted on said slide and adapted to operate said carrier and means for rotating said screw and cam in any desired ratio.

3. A grinding machine for the purposes described comprising a grinding wheel, a slide, a lead screw for moving the slide across the acting peripheral face of said wheel, a carrier on and guided by said slide and adapted to hold a wheel cutter or work piece, and means actuated by the rotation of said lead screw for continuously reciprocating the carrier relative to the slide and radially of said grinding wheel towards and away from the operative peripheral face of the latter with a strictly rectilinear movement at all times in a direction at an angle to the path of movement of said slide and simultaneously with, and in a predetermined ratio to, the movement of said slide in either direction of its path of movement.

STANLEY JAFFA HARLEY.