No. 646,021. Patented Mar. 27, 1900.

A. N. FAIRMAN.

STOVEPIPE ELBOW MAKING MACHINE.

(No Model.) (Application filed Apr. 19, 1899.)

4 Sheets—Sheet 1.

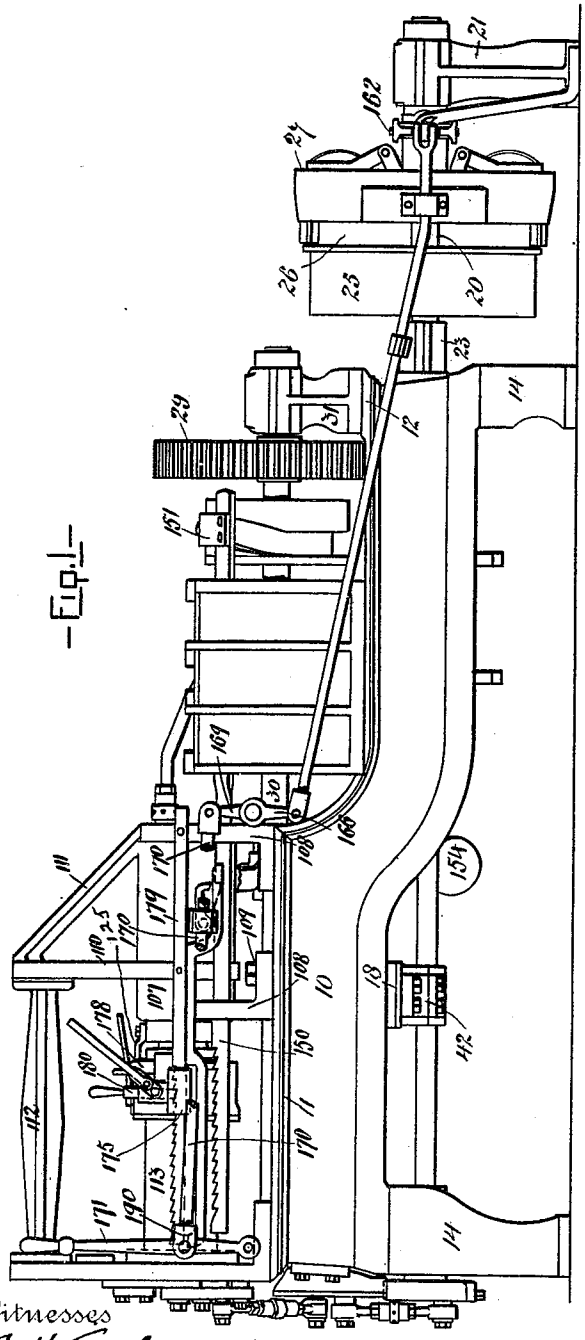

Fig. 1.

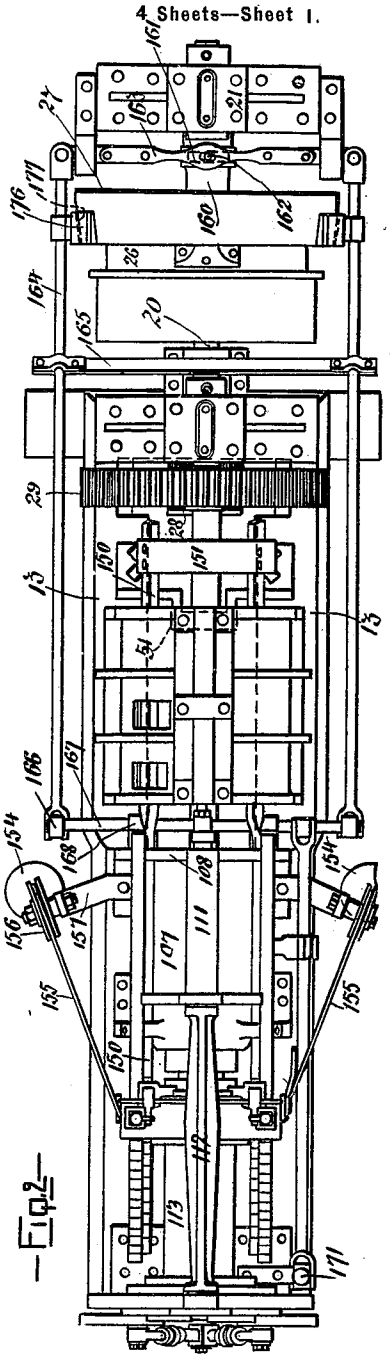

Fig. 2.

Witnesses
R. A. Chamberlin
Arthur F. Baker

Inventor
Alfred N. Fairman
By his Attorney
Albert W. Evans

THE NORRIS PETERS CO., PHOTO-LITHO., WASHINGTON, D. C.

No. 646,021. Patented Mar. 27, 1900.

A. N. FAIRMAN.

STOVEPIPE ELBOW MAKING MACHINE.

(Application filed Apr. 19, 1899.)

(No Model.) 4 Sheets—Sheet 2.

Fig. 3.

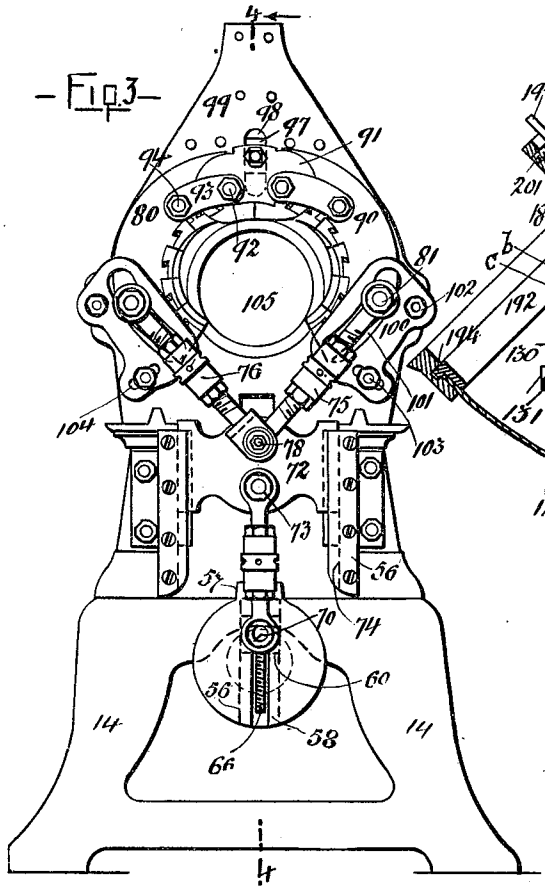

Fig. 4.

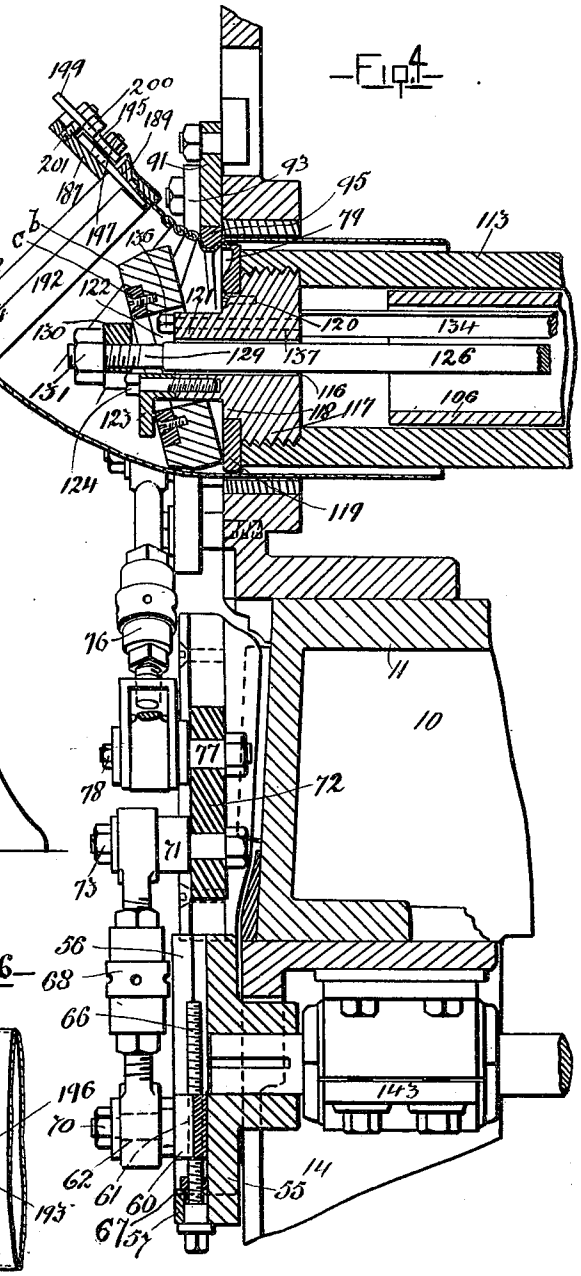

Fig. 5.

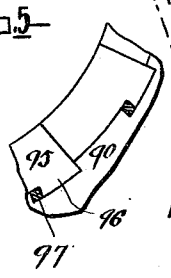

Fig. 6.

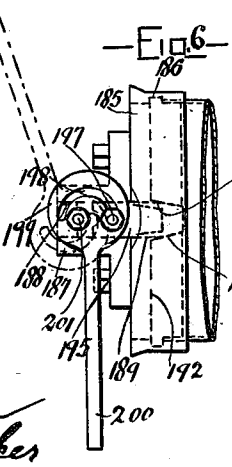

Witnesses
R. A. C. Kimber
Arthur F. Baker

Inventor
Alfred N. Fairman

By his Attorney
John N. Swan

THE NORRIS PETERS CO., PHOTO-LITHO., WASHINGTON, D. C.

No. 646,021. Patented Mar. 27, 1900.

A. N. FAIRMAN.

STOVEPIPE ELBOW MAKING MACHINE.

(Application filed Apr. 19, 1899.)

(No Model.)

4 Sheets—Sheet 3.

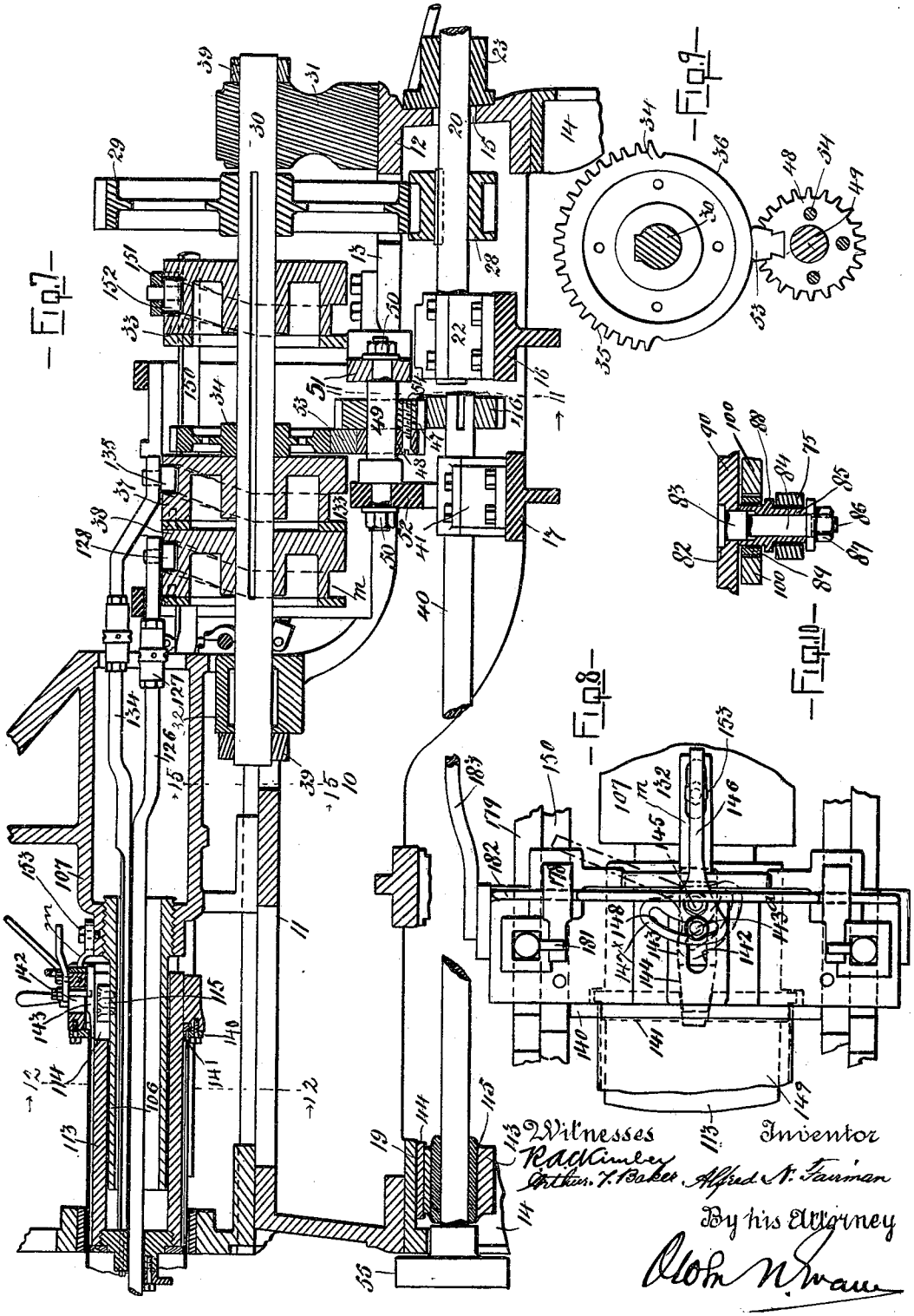

Witnesses
R. A. Kimber
Arthur T. Baker

Inventor
Alfred N. Fairman

By his Attorney
Olon N. Evans

THE NORRIS PETERS CO., PHOTO-LITHO., WASHINGTON, D. C.

No. 646,021. Patented Mar. 27, 1900.

A. N. FAIRMAN.

STOVEPIPE ELBOW MAKING MACHINE.

(Application filed Apr. 19, 1899.)

(No Model.) 4 Sheets—Sheet 4.

FIG. 12

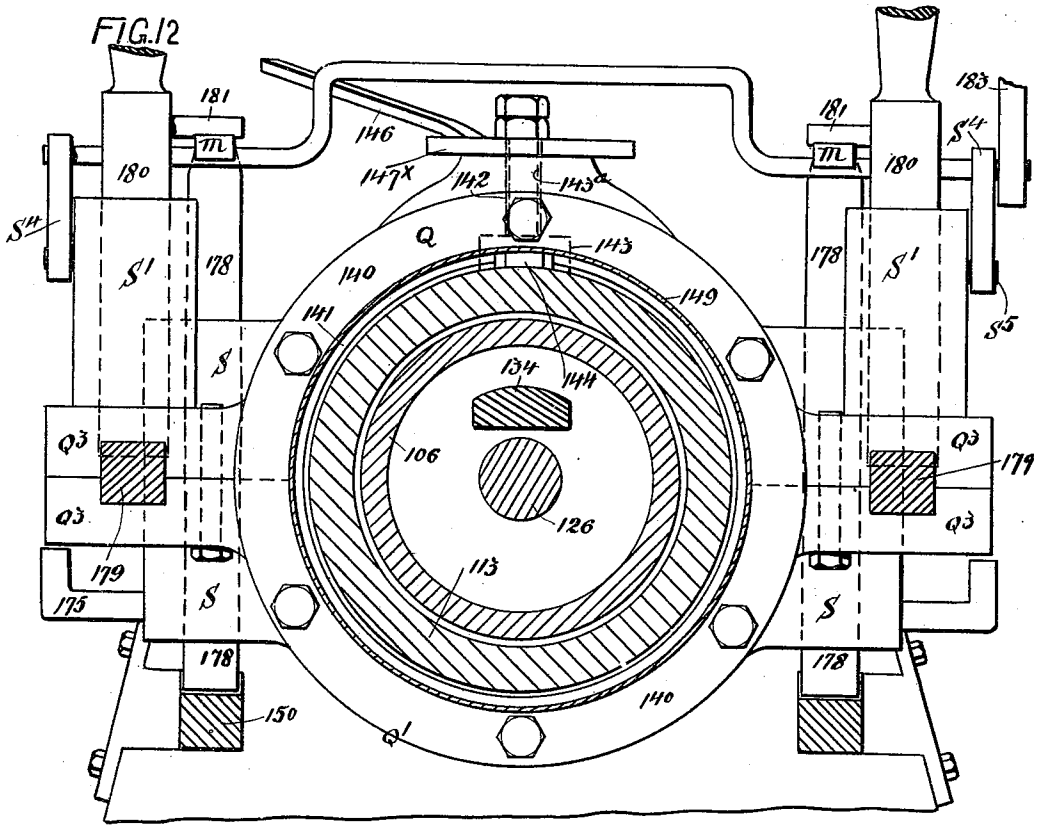

FIG. 11

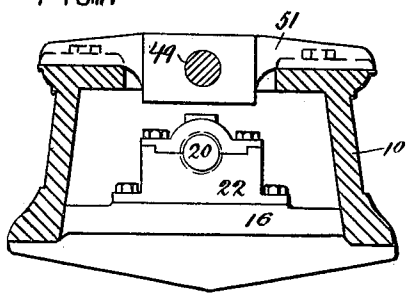

FIG. 14

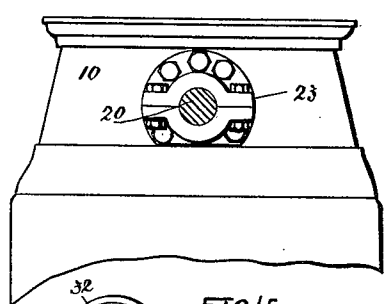

FIG. 13

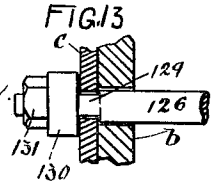

FIG. 15

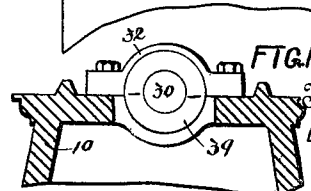

Witnesses
R. A. Kimber
Fred Clean

Inventor
A. N. Fairman

By his Attorney
Olson N. Evans

THE NORRIS PETERS CO., PHOTO-LITHO., WASHINGTON, D. C.

UNITED STATES PATENT OFFICE.

ALFRED NELSON FAIRMAN, OF MONTREAL, CANADA, ASSIGNOR OF ONE-HALF TO JAMES COOPER, OF SAME PLACE.

STOVEPIPE-ELBOW-MAKING MACHINE.

SPECIFICATION forming part of Letters Patent No. 646,021, dated March 27, 1900.

Application filed April 19, 1899. Serial No. 713,677. (No model.)

To all whom it may concern:

Be it known that I, ALFRED NELSON FAIRMAN, of the city of Montreal, Province of Quebec, Canada, have invented certain new and useful Improvements in Stovepipe-Elbow-Making Machines; and I do hereby declare that the following is a full, clear, and exact description of the same.

My invention relates particularly to the type of stovepipe-elbow-making machine illustrated and described in Letters Patent of the Dominion of Canada granted to me under No. 41,252 on December 15, 1892, and in the United States under No. 496,354 April 25, 1893; and the object of the invention is to improve this type of machine and at the same time provide a machine that will produce a greater number of better-finished elbows in a given time than has been possible heretofore and that will be more durable, less liable to get out of order, more easily repaired, and in operation more direct and less liable to vary in its action upon the pipe than machines heretofore known.

My improved machine may be said, briefly, to consist of a stationary mandrel and a reciprocating sleeve inclosing said mandrel and carrying a rigid head, to which a folder-head is hinged. A pair of crimpers are pivotally connected at their upper ends to a block having a vertical sliding connection with the face-plate of the machine above the folder-head, and the lower ends of the crimpers are operatively connected to a vertically-reciprocating cross-head, while means are provided whereby the movement imparted to the crimping-jaws by said cross-head will be converted to cause the crimpers to open and close to a variable extent about and intersect the space between the rigid and folder heads, and thereby crimp a portion of the pipe length, which is fitted over said heads into said space, the outer face of the rigid head being recessed to accommodate the crimped portion of the pipe while being folded over by the folder-head. The crimpers or jaws and the inner edge of the upper sliding block are formed with independent crimping edges made in sections and removably secured to said jaws and block.

The inner end of the length of pipe from which the elbow is to be formed is rigidly connected to the feeding-carriage by an expansible ring adapted to clamp said pipe tightly against the interior of a projecting annular portion of said carriage, while the outer end of the pipe is retained in a state of slightly-greater contraction than the inner end by a rigid ring and an expansible ring carried within it and between which and said rigid ring the outer end of the pipe is clamped.

The means for operating the jaws, the means for independently moving the rigid and folder heads one before the other and then simultaneously, the means for feeding the carriage, and the means for automatically stopping the machine at the completion of an elbow are also improved and rendered more efficient, and many improvements are made in their construction and arrangement that incidentally reduce the cost of the machine and add to its efficiency.

For full comprehension, however, of the invention reference must be had to the accompanying drawings, forming a part of this specification, in which like symbols indicate the same parts, and wherein—

Figure 1 is a side elevation of my improved machine. Fig. 2 is a plan view thereof. Fig. 3 is a front elevation thereof. Fig. 4 is an enlarged longitudinal vertical sectional view of the front portion of the machine, taken on line 4 4, Fig. 3, and with the jaws in crimping position. Fig. 5 is a detail view of a portion of the jaws. Fig. 6 is a plan view of the central portion of the clamping-ring for holding the pipe length to be crimped in a contracted state. Fig. 7 is a longitudinal vertical sectional view of the machine, taken on line with the same line as Fig. 4 and with the compressed head and jaws removed. Fig. 8 is a plan view of the carriage. Fig. 9 is a detail view of the gear connection and whereby an intermittent rotation is imparted from the cam-shaft to the shaft for operating the jaws. Fig. 10 is a sectional view of one of the pins for connecting the links to the crimping-jaws. Fig. 11 is a transverse sectional view of the lower part of the machine-frame, taken on line 11 11, Fig. 7, looking in the direction indicated. Fig. 12 is a similar view to Fig. 11, taken on line 12 12, Fig. 7, and illustrating the carriage. Fig. 13 is a detail horizontal sectional view of the compressor-

head and with the outer end of its actuating-rod shown in plan view. Fig. 14 is an elevation of the rear of the base of the machine-frame; and Fig. 15 is a vertical sectional view of the frame, taken on line 15 15, Fig. 7, and illustrating in elevation the forward bearing for the cam-shaft.

The frame of my machine consists of an oblong base 10, upwardly offset about midway of its length. The top of the forward raised portion constitutes a bed-plate 11, and the top of the rear portion provides a transverse rear end piece 12 and a pair of side longitudinals 13, this base being supported at its four corners upon legs 14, bolted thereto, and the rear end thereof is bored, as at 15, to allow the main driving-shaft 20 to be passed therethrough. This main shaft is supported at its extreme rear end in a pillow-block 21, bolted a short distance from the rear end of the base to the floor of the building, at its forward end in a bearing 22, bolted to a transverse portion 16 of the base, and about midway of its length in a bearing 23, bolted to the rear end of the base concentrically of the boring 15. A driving-pulley 25, having a clutch-face 26, is mounted loosely upon the driving-shaft near the bearing 23 and is adapted to be operatively connected thereto by a friction clutch-pulley 27, preferably of the Waterous and Peel type, (set forth in Canadian Patent No. 33,584, of February 4, 1890, and United States Patent No. 447,217, of February 24, 1891,) and mounted rigidly upon the shaft. This clutch-pulley will be hereinafter further alluded to. A pinion 28 is rigidly mounted upon this driving-shaft intermediate the bearings 22 and 23 and intermeshes with a gear-wheel 29, mounted rigidly upon a counter-shaft 30, supported at its rear end in a pillow-block 31, bolted upon the end piece 12, and at its forward end in a bearing-cap 32, bolted upon the frame which is adapted to accommodate the shaft-plate 11. Upon this counter-shaft are rigidly mounted, besides said gear-wheels 29, a cam 33 for imparting an intermittent feed movement to the carriage and a disk 34, having a portion of its periphery formed with gear-teeth 35 and the remainder plain, as at 36. Next to this semigear are rigidly-mounted cams 37 and 38 for actuating the means for flattening the crimped portion of the pipe length and folding the said flattened portion against the body of the pipe, respectively, this shaft being localized in its bearings by a pair of collars 39, secured rigidly one upon each end thereof.

A second counter-shaft 40 for actuating the crimping-jaws is mounted in approximately the axial line of the main shaft 20 in a bearing 41, bolted to a transverse piece 17 of the base 10, and in bearings 42 and 43, bolted to the under side of transverse pieces 18 and 19 of the base, and located, respectively, at the rear and forward ends of the upwardly-offset portion thereof, and the bearing 43 is furnished with a brass bushing 45. This counter-shaft 40 is intermittently rotated by the semigear 34 through the medium of a pinion 46, mounted rigidly upon the inner end thereof, and a pair of pinions 47 and 48, mounted loosely upon a short shaft 49, secured rigidly, as at 50, at its rear end in a boring in a bridge-piece 51, bolted transversely of the base, and at its forward end in a boring in a vertical web 52, extending longitudinally of and cast in one with the transverse piece 17 and the sides of the downwardly-offset portion of the base, the portions of the central portion of this web immediately contiguous to the transverse piece 17 being cored away to accommodate the bearing 41. The pinion 48 has a radially-projecting block 53, carried thereby and secured thereto by having the inner end thereof dovetailed and fitted into a dovetail slot in the periphery of said pinion, which is secured rigidly to the pinion 47 by means of pins 54. The forward end of this counter-shaft has a disk 55, rigidly mounted thereon and formed with a groove 56, extending from the periphery diametrically across the outer face thereof to within a short distance of the portion of the periphery diametrically opposite, at which point the disk is formed with a radial extension 57, which is bored in a line with the center of the end of the groove 56, while the outer edge of this groove is of diminished width to provide flanges 58. An adjustable block 60, formed with a screw-threaded longitudinal perforation 61, takes into said groove 56, wherein it is free to slide, but is held against lateral displacement by flanges 58. This block has a laterally-projecting pin 62, formed in one therewith, and the block 60 is adjusted toward or away from the center of the disk by a screw 66, carried rotatably in the radial extension 57 and taking into the screw-threaded perforation 61, while a jam-nut 67 locks the screw against rotation after the block has been adjusted to any desired position. A link 68, variable in length, connects this pin to a cross-head through which the crimping-jaws are operated. One end of this link takes over the pin 62, whereon it is held against displacement, but free to rotate by means of a washer and nut 70. The opposite end of the link takes loosely over a pin 71, carried rigidly by the cross-head 72, and although free to rotate is held against displacement by a washer and nut 73. This cross-head slides vertically in guides 74, bolted to the front of the base of the machine, and the crimping-jaws 80 are operatively connected thereto by a pair of links 75 and 76, variable in length, the lower end of the link 76 being forked to straddle the lower perforated end of the link 75 and perforated to take over, with said end of the link, a pin 77, carried rigidly by the cross-head, whereon they are held against displacement, although free to oscillate, by a washer and nut 78. These links 68, 75, and 76 may be of any approved construction. I will not describe them in detail, as they are well

known to all branches of mechanics and are clearly illustrated in the drawings.

The upper ends of the links 75 and 76 are connected to the crimping-jaws 80 and 90 by pins 81, each formed with a flat head, which is countersunk in a recess 82 in the rear side of the jaw, a portion 83 to project through the jaw, a portion 84 of slightly-reduced diameter to take through a sleeve 85, and a portion 86, further reduced in diameter, to receive a washer and nut 87. The sleeve has a collar 88, formed centrally, which separates the upper end of the link from a guide 100, the function of the latter being to control the movement of the jaws, while a roller 89 takes onto the inner end of this sleeve and runs in the cam-slot of the guide, this arrangement effectively retaining all the parts against displacement, allowing them freedom to oscillate relatively to one another.

My improved jaws (shown in detail in Figs. 3 and 5) consist of segmental plates 90, having a semicircular portion cut out of the upper end of each to receive the semicircular ends of a cross-piece 91, to which each jaw is pivotally connected concentrically of the adjacent semicircular end, as at 92, by a link 93, pivotally connected, as at 94, to the jaw, while the inner edges of the cross-piece and jaws have a series of knife-edged segments 95, connected rigidly thereto by dovetail connections 96 and tightening-keys 97. The continuous line of the knife-edge (formed by said segments) of each jaw extends diagonally from midway of the upper end of the jaw's thickness to the lower rear edge thereof. (See Fig. 3.) The cross-piece 91 has its movement confined in a vertical plane by a block 97, sliding in a vertical slot 98, cut in the face-plate 99 of the machine, and the movements of the jaws are controlled by the pair of guides before mentioned. These guides consist of a pair of plates 100, having segmental slots 101 cut therethrough and pivotally connected to the face-plate 99 by bolts 102, while they are adjustably connected to said face-plate by bolts 103, taking through segmental slots 104 in said guide-plates 100 and cut concentrically of the bolts 102. The face-plate 99, just mentioned, is offset at its lower end and bolted to the bed-plate, and an opening 105 is cut therethrough to accommodate the crimping-heads, to be presently described.

The mandrel consists of a sleeve 106, cast in one with a support consisting of a sleeve 107 of slightly-greater diameter than the mandrel-sleeve and having legs 108 cast in one therewith, through which it is bolted to the bed-plate, as at 109. A standard 110, also cast in one with the sleeve 107, is steadied by a diagonal brace 111 and acts as a brace for the face-plate through a distance-piece 112, bolted at its ends to the front and rear faces, respectively, of the standard and the face-plate. The reciprocating sleeve 113 for carrying the rigid head to which the folder-head is hinged fits over the mandrel-sleeve and has the top of its rear end slotted, as at 114, to receive a guiding-block 115, secured rigidly to the top of the mandrel-sleeve, while the end thereof is enlarged in interior diameter and screw-threaded to receive the rigid head. This rigid head is preferably made in two parts, one of which comprises a circular block of varying diameter having an oblong slot 116 extending axially therethrough and with the portion 117 of greatest diameter screw-threaded to take into its carrying-sleeve the portion 118 adjacent thereto, diminished in diameter and having a steel ring 119, (constituting the other part,) formed with a facial groove 79, taking thereon and secured in place by the overlapping heads of a series of screws 120, taking into the shoulder formed by the further-diminished outer end 121 of the block.

The folder-head consists of a circular block having its rear central portion cored out to accommodate the outer portion 121 of the rigid head and slotted, as at 122. I prefer, however, to construct this folder-head in two pieces, as shown clearly in Fig. 4, and a pivotal relation is established therebetween and the rigid head by an inverted-L-shaped retainer 123, the horizontal portion whereof projects inwardly through the slot 122 into contact with the outer end of 121, to which it is rigidly connected by a screw-bolt 124, while the vertical portion thereof projects downwardly over the outer face of said folder-head. The cam-disk 38 is formed with a peripheral cam-groove 125 for actuating this folder-head (clearly shown in Fig. 7) and operatively connected to the head by a rod 126, divided and the adjacent ends of its parts screw-threaded and connected together by a sleeve-coupling 127 in order to allow of adjustment to accommodate metals of different thicknesses and for fitting. The inner end of this rod carries a trundle-roll 128, taking into the said peripheral cam-groove 125, and its outer end is diminished in diameter, as at 129, to take through the slot 122 and receive a washer 130 and screw-threaded to receive a nut 131, the shoulders formed by diminishing the outer end, as shown in Fig. 13, bearing upon and forcing the head to its outwardly-inclined position.

The rigid head and its carrying-sleeve 113 are reciprocated by the cam 37, illustrated in Fig. 7, and having a peripheral groove 133 operatively connected to the head by a rod 134, similar in construction to the rod 126, carrying a trundle-roll 135 at its rear end and having its forward end tapped to receive a screw-bolt 136, taking through a hole 137, drilled axially through the head.

My improved pipe-feeding carriage is similar to that illustrated and described in my before-mentioned Letters Patent, excepting the parts for clamping the pipe end in place. This carriage consists of a ring formed of two sections Q Q', having side projections Q^3 Q^3, through which they are bolted together, such

projections being also pierced to fit over a pair of toothed check-bars 179, secured rigidly at their rear portions to the mandrel-support and projecting forwardly to within a short distance of the face-plate. A pair of vertical guides S′ are cast in one with the sections Q, and a pair of vertically-movable dogs 180 are located in said guides and engage said toothed bars 179. A second pair of dogs 178 are located in a pair of guides S, cast in one with the carriage-sections Q Q′, and these dogs engage a pair of reciprocating feed-bars 150, guided in openings in the legs 108 of the mandrel-support and connected together at their rear ends by a rigid yoke 151, carrying a trundle-roll 152 on its under side to take into the peripheral groove of a feed-cam 33. (Shown clearly in Fig. 7.) The projecting annular portion 140 of the carriage, to which the pipe is clamped, is sufficiently large in diameter to inclose the pipe and an open ring 141, between which and the interior of the annular portion the pipe is slipped. The top portion of the carriage-body has an axial slot 142, extending therethrough, the top of its interior being axially recessed to accommodate a slide 143, having its forward end diminished in thickness and in the form of a wedge 144, this slide being adapted to be slid axially of the carriage with its wedge between the open ends of the ring 141, and the top of this slide is provided with a vertically-projecting rigid pin 143^a, taking through said slot 142. A cam-lever is fulcrumed at 145 to the top of the carriage and consists of a handle 146, having a widened and flattened portion $147^\times$, formed with a curved slot 148, extending tangentially of the fulcrum-point 145, and receiving the upper end of the pin 143^a. The wedge portion of the slide is diminished in thickness to allow the pipe 149 to be slipped over it, and when the pipe is slipped into place it is rigidly held against displacement by moving the lever 146 toward the position shown in dotted lines, which will cause the wedge to force the ends of the ring 141 apart, thereby expanding the ring and firmly clamping the pipe to the interior of the protruding annular portion 140 of the carriage. The carriage is automatically returned to its starting-point after a completed elbow has been removed by a pair of weights 154, connected thereto by lengths of wire rope 155, running over a pair of sheaves 156, mounted in brackets 157, secured to the bed-plate of the machine and projecting laterally therefrom.

My improved means for stopping the machine at the completion of an elbow consists of the before-mentioned frictional clutch-pulley 27, the sleeve 60 of which (which is mounted loosely upon the main shaft, but connected thereto by a feather and groove) is circumferentially grooved, as at 161, to receive at diametrically-opposite points a pair of pins 162, carried by a transverse bar 163, formed midway of its length with an opening to take around said sleeve, the top and bottom portions of said bar within said opening carrying said pins. A pair of rods 164 are connected together by a link 165 and have their forward ends pivotally connected to a pair of downwardly-projecting lever-arms 166, formed in one with a bar 167, rotatably mounted transversely of the machine in bearings 168, bolted to the rear faces of the rear legs 108 of the mandrel-support, while an upwardly-projecting lever-arm 169 is pivotally connected to one end of a rod 170, the other end whereof is pivotally connected to a hand-lever 171, fulcrumed at its lower end to a bracket bolted upon the bed-plate of the machine.

It is obvious that by moving the handle of the lever toward the front of the machine the sleeve 160 for operating the clutch will be moved toward the rear of the machine and the clutch disengaged from the continuously-running loose driving-pulley. I have found it essential, however, to the perfect working of the machine to provide means for automatically instantaneously arresting the movement of the machine upon the completion of an elbow, and to this end in some cases it is required to provide a longer plane portion at the end of the pipe than in others, and to enable the length of this plane portion to be varied I mount an adjustable stop in a position to be engaged by the carriage when it is drawn back by the weights. This stop consists of a short offset bar *m*, slotted, as at 132, to receive a retaining screw-bolt 153, which takes therethrough into the mandrel-support 107. It is obvious that by adjusting this stop toward the front of the machine the plane portion can be increased, and vice versa. The machine is brought to a standstill simultaneously with the arrival of the carriage at its extreme forward position, and consequently with the disengagement of the clutch and driving-pulley, by means of a pair of brake-shoes 176, secured rigidly upon the rods 164 in a position to engage the periphery 177 of the clutch-pulley, which is inclined, as shown, to enable the shoes, which are correspondingly inclined, to firmly grip the pulley upon the rectilinear movement of the shoes with the rods.

An operative connection is effected between the feed-cam and the carriage through the feed-bars 150 and feed-dogs 178, carried by the carriage, while the carriage is retained in the position to which it is fed by stationary toothed check-bars 179, carried by the frame of the machine, and vertically-movable dogs 180, also carried by the carriage and adapted to engage the teeth of said check-bars. The upper ends of the dogs 180 are offset to take beneath pin projection 181 upon the dogs 178, and a cross-rod 182, having its ends offset and fulcrumed to the carriage, is actuated by a handle 183 to lift all the dogs simultaneously out of engagement with their feed and check bars to allow the carriage to be returned by the weights to its starting-point. All of these parts excepting the weights are as illustrated

and described in my before-mentioned Letters Patent, where a detail description of their structural features and operation can be found.

The outer end of a curved pipe length, when its inner end is inserted between the heads and crimping-jaws, is held in a state of slightly-greater contraction than said inner end by a rigid annular section 185, having its interior circumferentially grooved, as at 186, an axially-projecting bracket 187 being bolted to one face of the annulus, while the outer face of said bracket is recessed, as at 188, and the interior of the annulus axially recessed, as at 189, the bracket being so arranged as to locate its recess in line with the recess 189. An open ring 192, having the faces of its ends inclined toward one another, as at 193, and one side edge of its perimeter radially offset to provide a shoulder 194, is carried within said annulus 185, with its shoulder 194 resting in the groove 186 and its inclined ends 193, when in its normally-contracted state, intersecting the side edges of the recess 189. A slide 195, having one end in the form of a wedge 196, rests in the recess 188, with its wedge projecting into the recess 189 and is provided with a pin projection 197, taking into a cam-slot 198 in the flattened portion 199 of a lever 200, fulcrumed, as at 201, to the bracket 187. This device is fitted upon the pipe, with the outer end thereof taking between the resilient expansible ring and its rigid carrier, and by moving the lever 200 from the position shown in dotted lines to that in full lines, Fig. 6, the wedge will be forced between the inclined ends of the resilient ring, thereby causing it to expand and firmly clamp the pipe end between it and the rigid carrier.

The operation of my improved machine is as follows: The carriage is drawn back by and yieldingly held in its rearmost position by the weights 154, where the feed-dogs 178 engage the rearmost teeth of the feed-bars 150 and the check-dogs 180 engage the rearmost teeth of the check-bars 179. The curved pipe length to be crimped is passed through the opening 105 in the face-plate and caused to encircle the reciprocating sleeve 113, its inner end being clamped to the carriage and the edges of its outer end held together by the outer clamping device. The handle of the lever 171 being moved toward the rear of the machine will cause the brake-shoes to be disengaged from the surface of the friction-clutch, which will simultaneously be caused to engage the driving-pulley, thus starting the machine. Upon the rotation of the driving-pulley, and with it the main shaft 20, the counter-shaft 30 and the semigear 34 and the cam 33 will, through the pinion 28 and gear 29, be caused to rotate with said main shaft and the carriage to be intermittently fed toward the front of the machine. Simultaneously with the completion of each feed movement the gear-toothed portion 35 of the semigear will, through the idlers 47 and 48, pinion 46, counter-shaft 40, crank-disk 55, links 68, and the cross head and links 75 and 76, cause the crimping-jaws 80 and 90 and cross-piece 91 to impinge upon the pipe, crimp a portion thereof between the rigid head and folder-head, and return to their normal positions. The cam 38, through rod 126, then causes the compressor-head to compress or flatten the crimped portion of the pipe. The cam 37 then commences to act in unison with the cam 38, thus causing the periphery of the compressor-head to fold the flattened crimped portion against the body of the pipe, the groove 79 in the outer face of the rigid head accommodating the fold in its movement and diminishing the distance heretofore necessary for that purpose between the rigid and folder heads, besides preventing buckling and cracking of the iron of the fold. The feed operation and the foregoing are then repeated until the lateral projection 175 upon the carriage engages and shifts the pawl-supporting rod, (which has its forward end upwardly offset, as at 190, for that purpose,) thus causing the pawl carried by the clutch and brake-operating rod to engage the feed-bar and effect an operative connection between said bar and rod and cause the succeeding feed movement to disengage the clutch from the driving-pulley and the brake-shoes to grip and instantaneously arrest the clutch-pulley and the machine.

It is obvious that if the groove 79 were not in the rigid head the crimped portion of the pipe could not be folded upon the pipe-body by the folder-head unless a distance between the faces of the rigid head and folder-head was equal to that between the inert face of folder-head and the bottom of the groove. It is further obvious that by inclosing the mandrel by the reciprocating sleeve the possibility of the machine being clogged by grit or scale freed by the folding collecting between said sleeves is entirely obviated, while by the novel construction, arrangement, and combination of the parts hereinbefore described a better-finished elbow can be produced in less time and the parts be less liable to get out of order and more easily repaired than has been possible heretofore.

What I claim is as follows:

1. In a machine for making stovepipe-elbows, the combination with means for holding the pipe to be crimped, of a rectilinearly-reciprocating crimping portion; a pair of oscillating crimping portions; means for operatively connecting said oscillating crimping portions to said rectilinearly-reciprocating crimping portion, and means for acting upon said oscillating crimping portions and causing said oscillating crimping portions to actuate the rectilinearly-reciprocating portion all of said crimping portions to act simultaneously upon the pipe substantially as described and for the purpose set forth.

2. In a machine for making stovepipe-elbows, the combination with means for hold-

ing the pipe to be crimped, of a rectilinearly-guided crimping portion: a pair of main segmental crimping portions; means for reciprocating said segmental crimping portions, means for operatively connecting said main crimping portions to said rectilinearly-guided portion whereby said oscillating crimping portions will actuate the rectilinearly-reciprocating portion; and means for guiding said segmental portions to cause same to oscillate and act upon the pipe simultaneously with said rectilinearly-reciprocating portion.

3. In a machine for making stovepipe-elbows, the combination with means for holding the pipe to be crimped, of a rectilinearly-guided crimping portion; a pair of main segmental crimping portions; means for reciprocating said segmental crimping portion means for operatively connecting said main crimping portions to said rectilinearly-guided portion whereby said oscillating crimping portions will actuate the rectilinearly-reciprocating portion; and adjustable means for guiding said segmental portions to cause same to oscillate and act upon the pipe simultaneously with said rectilinearly-reciprocating portion.

4. In a machine for making stovepipe-elbows, the combination with means for holding the pipe to be crimped; of a rectilinearly-guided crimping portion; a pair of segmental crimping portions; means for pivotally connecting one end of each of said segmental crimping portions to said rectilinearly-guided portion; a rectilinearly-guided cross-head; means for reciprocating said cross-head; means for connecting said cross-head to the free ends of said segmental crimping portions; and means for guiding the movement of said segmental crimping portions, for the purpose set forth.

5. In a machine for making stovepipe-elbows, the combination with means for holding the pipe to be crimped; of a rectilinearly-guided crimping portion; a pair of segmental crimping portions; means for pivotally connecting one end of each of said segmental crimping portions to said rectilinearly-guided portion; a rectilinearly-guided cross-head; means for reciprocating said cross-head; means for connecting said cross-head to the free ends of said segmental crimping portions; and adjustable means for guiding the movement of said segmental crimping portions, for the purpose set forth.

6. In a machine, substantially as described, for making stovepipe-elbows, the combination of the frame; means for holding the pipe to be crimped; a rectilinearly-guided crimping portion; a pair of segmental crimping portions; means for pivotally connecting one end of each of said segmental crimping portions to said rectilinearly-guided portion; a rectilinearly-guided cross-head; means for connecting said cross-head to the free ends of said segmental crimping portions; means for guiding the movement of said segmental crimping portions; a shaft mounted in the frame; a crank-disk mounted rigidly upon one end of said shaft; a pitman connecting said crank-disk to said cross-head; a pinion mounted rigidly upon said shaft; a stub-shaft mounted adjacent to said shaft; a pair of pinions rigidly connected together and mounted loosely upon said stub-shaft, one of the pinions of said pair intermeshing with said before-mentioned pinion and the other pinion of said pair being constructed with a segmental block; a third shaft having a disk mounted rigidly thereon one half of the periphery of said disk being plane and the other half gear-toothed and intermeshing with the last-mentioned pinion of said pair; and means for rotating said last-mentioned shaft, substantially as and for the purpose set forth.

7. In a machine, substantially as described, for making stovepipe-elbows, the combination of the frame; means for holding the pipe to be crimped; a rectilinearly-guided crimping portion; a pair of segmental crimping portions; means for pivotally connecting one end of each of said segmental crimping portions to said rectilinearly-guided portion; a rectilinearly-guided cross-head; means for connecting said cross-head to the free ends of said segmental crimping portions; adjustable means for guiding the movement of said segmental crimping portions; a shaft mounted in the frame; a crank-disk mounted rigidly upon one end of said shaft; a pitman connecting said crank-disk to said cross-head; a pinion mounted rigidly upon said shaft; a stub-shaft mounted adjacent to said shaft; a pair of pinions rigidly connected together and mounted loosely upon said stub-shaft, one of the pinions of said pair intermeshing with said before-mentioned pinion and the other pinion of said pair being constructed with a segmental block; a third shaft having a disk mounted rigidly thereon one half of the periphery of said disk being plane and the other half gear-toothed and intermeshing with the last-mentioned pinion of said pair; and means for rotating said last-mentioned shaft substantially as and for the purpose set forth.

8. In a stovepipe-elbow-making machine, a crimper consisting of an intact segmental body portion having a series of knife-edged segmental sections secured rigidly to the inner edge thereof.

9. In a stovepipe-elbow-making machine, a crimper consisting of a segmental body portion having its inner edge formed with a series of transverse dovetail grooves, and a series of segmental sections having their inner edges knife-edged and their outer edges formed with radial dovetail projections to take into said dovetailed grooves, and a series of keys for securing said segmental sections to the body portion, substantially as described and for the purpose set forth.

10. In a stovepipe-elbow machine, a stationary mandrel; a reciprocating sleeve supported

by and inclosing said mandrel; a rigid head carried by said reciprocating sleeve; a compressor-head pivotally carried by said rigid head; means for crimping portions of a pipe length between said rigid and folder heads; means for oscillating said folder-head to and from said rigid head; means for reciprocating said sleeve; and means for feeding the pipe length over said heads, substantially as described and for the purpose set forth.

11. In a stovepipe-elbow machine, a stationary mandrel: a reciprocating sleeve supported by and inclosing said mandrel; a rigid head carried by said reciprocating sleeve and having a circular groove in its outer face; a folder-head pivotally carried by said rigid head; means for crimping portions of a pipe length between said rigid head and folder-head; means for oscillating said folder-head to and from said rigid head; means for reciprocating said sleeve; and means for feeding the pipe length over said heads, substantially as described and for the purpose set forth.

12. A stovepipe-elbow-making machine comprising a frame having its forward half formed with a bed-plate and its rear half downwardly offset; a mandrel-support consisting of a body portion in the form of a sleeve having a forwardly-projecting rigid mandrel-sleeve, and formed with legs bolted to the bed-plate near the rear thereof; a sleeve taking over and supported by said mandrel-sleeve; a slotted head carried rigidly by the outer end of said outer sleeve and formed with a circumferential peripheral extension of slightly-greater diameter than that of the exterior of the outer sleeve and the outer end of said head being diminished in diameter; a folder-head formed with a circular recess in the rear side to receive the diminished end of said rigid head, and slotted at right angles to the slot in the rigid head; an inverted-L-shaped retainer secured rigidly to the outer end of said rigid head and projecting through and overlapping the lower portion of said folder-head; means for oscillating said folder-head to and from the rigid head and means for reciprocating said rigid head; means for holding the pipe to be crimped; and means for crimping portions of the pipe between said heads, substantially as described and for the purpose set forth.

13. A stovepipe-elbow-making machine comprising a frame having its forward half formed with a bed-plate and its rear half downwardly offset; a mandrel-support consisting of a body portion in the form of a sleeve having a forwardly-projecting rigid mandrel-sleeve, and formed with legs bolted to the bed-plate near the rear thereof; a sleeve taking over and supported by said mandrel-sleeve a slotted head carried rigidly by the outer end of said outer sleeve and formed with a circumferential peripheral extension of slightly-greater diameter than that of the exterior of the outer sleeve and the outer end of said head being diminished in diameter; a folder-head formed with a circular recess in its rear side to receive the diminished end of said rigid head, and slotted at right angles to the slot in the rigid head; an inverted-L-shaped retainer secured rigidly to the outer end of said rigid head and projecting through and overlapping the lower portion of said folder-head; a shaft supported at its forward end in a bearing set in the rear end of the bed-plate and at its rear end in a pillow-block bolted upon the rear end of the frame; a pair of cams mounted rigidly upon said shaft adjacent to said bed-plate; a pair of rods carrying trundle-rolls to take into cam-grooves in the peripheries of said cams and extending forwardly and connected to the rigid head and folder-heads respectively; means for holding the pipe to be crimped, and means for crimping portions of the pipe between said heads substantially as described and for the purpose set forth.

14. In a stovepipe-elbow-making machine, a pipe-feeding carriage comprising a rigid ring and an expansible clamping-ring located within said rigid ring, said rings receiving the pipe end between them, and means for expanding said expansible ring.

15. In a stovepipe-elbow-making machine a pipe-feeding carriage comprising a rigid ring and an open clamping-ring located within said rigid ring, said rings receiving the pipe end between them; a wedge carried by the carriage and taking between the ends of said rings and a cam-lever for moving said wedge, as described.

16. In a stovepipe-elbow-making machine, a pipe-feeding carriage and means for moving said carriage intermittently toward the front of the machine, comprising a pair of feed-bars; a cross-piece rigidly connecting said bars together near their rear ends; a trundle-roll carried upon said cross-piece; a shaft; a cam-disk mounted rigidly upon said shaft and having a peripheral cam-groove receiving said trundle-roll; means for rotating said shaft; and feed-dogs carried by the carriage and engaging the notches in the feed-bars, substantially as described.

17. A stovepipe-elbow-making machine comprising a pipe-feeding carriage for holding the pipe to be operated upon; means for intermittently moving said pipe-feeding carriage toward the front of the machine comprising a feed-bar; means for crimping portions of the pipe; means for folding over and flattening the crimped portion; means for driving the machine, comprising a driving-shaft a continuously-driven pulley mounted loosely upon said shaft; a friction clutch-pulley mounted rigidly upon said shaft; means for causing said friction clutch-pulley to automatically engage and be disengaged from said driving-pulley, consisting of a lateral projection upon the carriage; a suitably-supported slidable bar extending parallel to the line of travel of the carriage and offset at its forward end to intersect the path of said lat-

eral projection; a pawl adapted to engage a notch in the feed-bar and held out of engagement therewith by the rear end of said bar; a bar mounted transversely of the machine and having a pair of downwardly-projecting rigid lever-arms, and an upwardly-projecting rigid lever-arm; a rod carrying the above-mentioned pawl, and pivotally connected at its rear end to the said upwardly-projecting lever-arm; a pair of bars pivotally connected at their forward ends to said downwardly-projecting lever-arms; means for steadying the rear portions of said bars; means for operatively connecting the rear ends of said last-mentioned bars to the friction-clutch whereby, by the extreme forward movement of the carriage, the clutch-pulley will be disengaged from the driving-pulley, substantially as described and for the purpose set forth.

18. A stovepipe-elbow-making machine comprising a pipe-feeding carriage for holding the pipe to be operated upon; means for intermittently moving said pipe-feeding carriage toward the front of the machine comprising a feed-bar; means for crimping portions of the pipe; means for folding over and flattening the crimped portions; means for driving the machine, comprising a driving-shaft a continuously-driven pulley mounted loosely upon said shaft; a friction clutch-pulley mounted rigidly upon said shaft and having its rim beveled; means for causing said friction clutch-pulley to automatically engage and be disengaged from said driving-pulley, consisting of a lateral projection upon the carriage; a suitably-supported slidable bar extending parallel to the line of travel of the carriage and offset at its forward end to intersect the path of said lateral projection; a pawl adapted to engage a notch in the feed-bar and half out of engagement therewith by the rear end of said bar; a bar mounted transversely of the machine and having a pair of downwardly-projecting rigid lever-arms, and an upwardly-projecting rigid lever-arm; a rod carrying the above-mentioned pawl and pivotally connected at its rear end to the said upwardly-projecting lever-arm; a pair of bars pivotally connected at their forward ends to said downwardly-projecting lever-arms and having brake-shoes mounted thereon in close proximity to said clutch-pulley means for steadying the rear portions of said bars; means for operatively connecting the rear ends of said last-mentioned bars to the friction-clutch, whereby by the extreme forward movement of the carriage the clutch-pulley will be disengaged from the driving-pulley and the brake-shoes moved into engagement with the inclined rim of the clutch-pulley substantially as described and for the purpose set forth.

19. In a stovepipe-elbow-making machine, the combination, with the pipe-feeding carriage and means for returning the carriage after the completion of an elbow, of adjustable stationary means for automatically varying the extent of the return movement of said carriage, for the purpose set forth.

20. In a stovepipe-elbow-making machine, the combination with the pipe-feeding carriage and means for returning the carriage after the completion of an elbow, of an adjustable stationary stop for varying the extent of return movement of the carriage, substantially as described and for the purpose set forth.

In testimony whereof I have affixed my signature in presence of two witnesses.

ALFRED NELSON FAIRMAN.

Witnesses:

ROBERT BENNETT HUTCHESON,

FRED J. SEARS.