May 26, 1942. A. E. WINSLOW 2,283,963

SPINDLE

Filed May 11, 1940

Fig. 1.

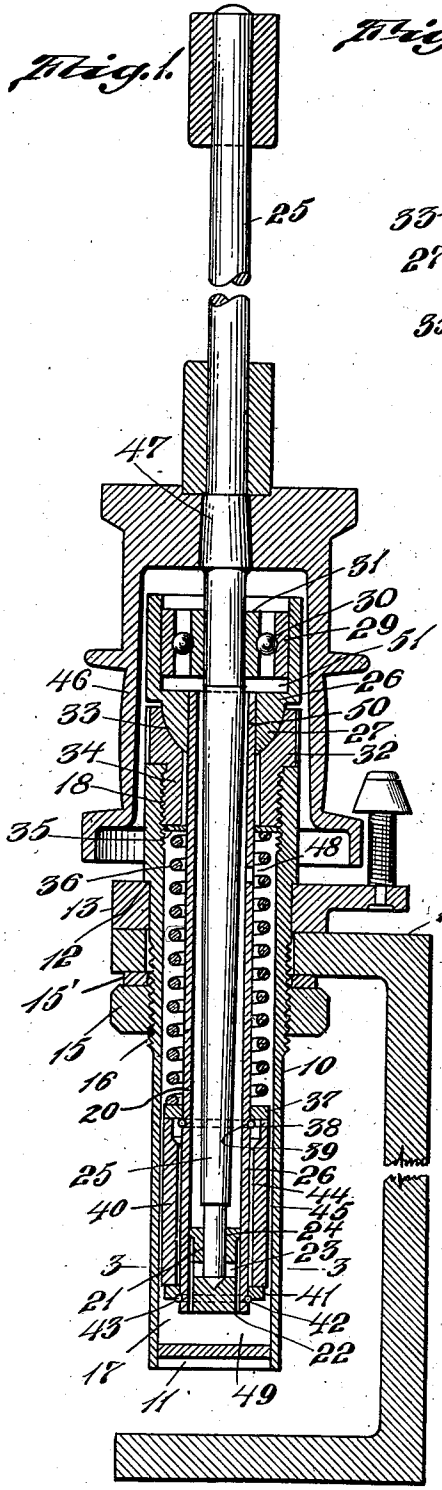

Fig. 2.

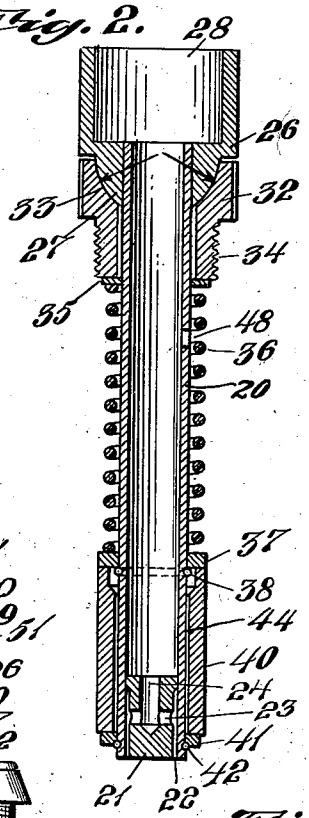

Fig. 4.

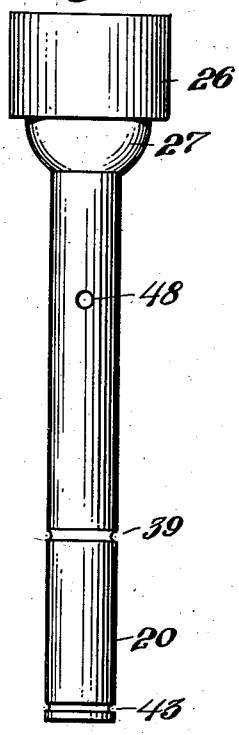

Fig. 5.

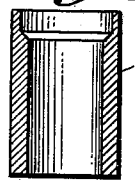

Fig. 6.

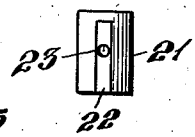

Fig. 3.

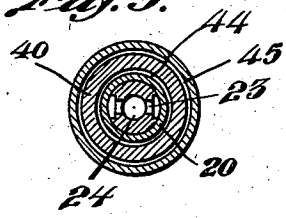

INVENTOR.
Albert E. Winslow
BY Barlow & Barlow
ATTORNEYS.

Patented May 26, 1942 2,283,963

UNITED STATES PATENT OFFICE

2,283,963

SPINDLE

Albert E. Winslow, New London, Conn., assignor, by mesne assignments, to Atwood Machine Company, Stonington, Conn., a corporation of Connecticut

Application May 11, 1940, Serial No. 334,667

11 Claims. (Cl. 308—154)

This invention relates to a spindle of the character used in the textile industry for spinning, twisting and the like; and the invention has for one of its objects to minimize vibration or oscillation of a high speed spindle which may carry an out-of-balance load.

Another object of the invention is to provide a centering and gyrating motion-retarding influence in the rockable joint itself such, for instance, as by the shape thereof.

Another object of the invention is to prevent crystallization of relatively moving parts in a modified ball and socket type of bolster.

Another object of the invention is to provide means for dampening the relative motion of the spindle bolster and the casing in which it is mounted.

A more specific object of this invention is to dampen this relative motion above-mentioned by means of utilizing the oil in the spindle casing to form a cushion for this purpose.

With these and other objects in view, the invention consists of certain novel features of construction, as will be more fully described, and particularly pointed out in the appended claims.

In the accompanying drawing:

Fig. 1 is a sectional view of the spindle and its mounting upon the rail;

Fig. 2 is a sectional view of the bolster assembly;

Fig. 3 is a sectional view through the lower end of the bolster assembly;

Fig. 4 is a side elevation of the bolster assembly;

Fig. 5 is a sectional view of the sleeve of the bolster assembly;

Fig. 6 is a side elevation of the lower step bearing.

In the use of spindles at the present time it is desirable to attain high-speed operation, which makes it necessary to provide means for accommodating varying loads which may at times be somewhat unbalanced and which may chatter in being brought up to speed. Such occurrences may result in the breaking of an end of the textile yarn which is being operated upon, especially if such yarn is weak or delicate. In order to overcome these difficulties I have provided an arrangement whereby the spindle may oscillate, but I have controlled this oscillation and dampened it to such an extent that the movement is not detrimental; and the following is a more detailed description of the present embodiment of this invention, illustrating the preferred means by which these advantageous results may be accomplished:

With reference to the drawing, 10 designates a tubular casing having a standard steel tubular shell with a suitable bottom 11 fixed therein by brazing. The casing is shouldered as at 12 between its ends to engage the base 13 which is brazed to the casing and rests upon the spindle rail 14. The nut 15 on the thread 16 of this casing 10 acting on the under side of the rail through the washer 15' draws the casing downwardly, binding it and the base against the rail. This casing has a suitable bore or well 17 for the reception of the bolster assembly and is provided with internal threads 18 at its upper end.

The bolster assembly (see Fig. 2) consists of the bolster tube 20 which has a tight-fitting step bearing 21 of bronze forced into its lower end, said bearing having oil channel 22 extending axially and a cross channel 23 extending laterally thereof and joining with the bore 24 which receives and provides the bearing for one end of the spindle blade 25. At its upper end, the bolster 20 is brazed to the member 26 which has an egg shape or bulbous outer surface 27 and is cut out as at 28 to receive the outer raceway 29 of the ball bearing 30, the inner raceway 31 of which engages spindle blade 25. A socket member 32 has a seat 33 of a shape to receive the egg-shaped member 27 so as to permit a relative rocking action of the members 26 and 32 under certain conditions.

This bulbous or generally egg-shaped surface 27 is not a true spherical surface, but rather is a surface of a body having an axis longer in the direction of the axial extent of the blade and bolster than laterally thereof; and while the curvature of the socket seat and the bulbous surface 27 are not critical, the arrangement is such that relative movement of the bulbous surface in its seat will cause the bolster to rise in its seat as the bolster is rocked. Thus, tension will be placed upon the spring 36 which tends to hold the bulbous surface of the bolster in its seat.

The member 32 is reduced in diameter as at 34 and is provided with a threaded outer surface to engage the thread 18 of the casing 10. However, in assembly, the member 32 is positioned over the end of the bolster 20 so as to engage the egg-shaped surface 27, and then there is assembled upon this bolster a washer 35 with spring 36 engaging this washer, while another washer 37 is held fixedly in place by the small spring wire 38 seated in a suitable groove 39 in the outer surface of the bolster with spring 36

under a suitable tension (for illustration about 85 to 90 pounds) for loading its compression. I also assemble below this spring a sleeve **40** and hold this against removal by means of the washer **41** and spring ring **42** in recess **43**. This recess **43** is positioned at such location that there is a small vertical play of the sleeve **40** on the bolster. Also, the sleeve has some lateral movement with respect to the bolster, as will presently be described.

With the bolster, spring and sleeve thus assembled, I insert this assembly into the casing **10** and screw the threads **34** of the member **32** into the threads **18** of the casing which completes the assembly of the spindle bearing.

The sleeve **40** is of such relative size that a small passage is provided at **44** and also at **45** so that there will be an oil film at both of these points along the sleeve, it being readily understood that there will be oil provided in the casing up to substantially the level of the lower edge of the whorl which is designated generally **46** and is positioned on the taper **47** of the blade in a usual manner. The center of the drive for the whirl will be just below the center of gyration or movement of the egg-shaped bulbous surface **27** and socket **33** so that should oscillations occur due to an unbalanced load, they will occur about a center point just above the center of the belt drive of the whorl. The tendency will be for the bolster with its spindle supported at the ball bearings **30** and step bearings **21** to move in the cup seat, and which by reason of the shape of the seat will tend to lift the bolster from the seat so as to compress the spring drawing these two surfaces together and increase the friction thus exerted on this seat and by reason of the tension of the spring and friction restrict gyration of the spindle. Thus bolster movement will be retarded by the spring itself, although resiliently permitted, as any movement of the bolster will tend to compress the spring slightly. This compression action of the spring together with the vibration of the running of the machine will bring the spindle back to central position in the casing when any such overbalance load such as causes motion is relieved.

Further, this tendency of movement in the rockable seat is further cushioned and retarded by reason of the two oil films between the inner and outer surfaces of the sleeve **40** and this sleeve being at the very lower end of the bolster becomes very effective through greatest leverage for such cushioning action. Thus, in addition to the retarding influence of the shape of the seat, the friction of the surfaces themselves and the spring, I provide a cushion of the liquid itself which assists in retarding motion of a gyrating character in the spindle.

The motion of the spindle will cause oil to circulate by passing upwardly through the channel **22** inwardly to the step bearing as at **23**, then upwardly through this bearing and along the spindle until it reaches oil hole **48** where it will then flow outwardly down along the spring and over the cushion sleeve to provide a film on either side of the cushion sleeve and thus back into the reservoir **49**. This action of the spindle also causes sufficient oil to move upwardly to the ball bearing by reason of clearance **50**, but not sufficient to cause overflowing of the oil from the ball bearing to get onto the whirl and be thrown thereby. The space **51** below the ball bearing will retard this flow.

The member **32** is not necessarily of any particular material, and while it may be of a metal, is preferably and desirably formed of some non-metallic material such, for instance, as some of the phenolic or resinate condensation products, as by such formation and selection of this material I eliminate contact oxidation between the bulbous and socket members which might occur if these were metal-to-metal faces moving one upon the other, which I have known to often occur due to the affinity which one metal has for the other and the static charges which may be set up to be present under such operating conditions. An example of a suitable material is "Bakelite" or "Micarta," although other similar materials of these non-metallic types may of course be utilized.

I find that these non-metallic materials also have a sufficient resilient action so that certain cushioning shocks and even gyratory movements are absorbed by this non-metallic material by reason of its material alone.

The foregoing description is directed solely towards the construction illustrated, but I desire it to be understood that I reserve the privilege of resorting to all the mechanical changes to which the device is susceptible.

I claim:

1. In a spindle, a blade, a bolster for supporting said blade, said bolster being provided with a bulbous, substantially longitudinally-elongated surface, a casing having fixed thereto a correspondingly-shaped socket to receive said surface for rockably supporting the bolster in suspended position in the casing, and resilient means for drawing said bulbous surface into said socket so that the axes of said bulbous surface and socket will tend to align.

2. In a spindle, a blade, a bolster for supporting said blade, said bolster being provided with a bulbous, substantially longitudinally-elongated surface, a casing having fixed thereto a correspondingly-shaped socket to receive said surface for rockably supporting the bolster in suspended position in the casing, resilient means for drawing said bulbous surface into said socket so that the axes of said bulbous surface and socket will tend to align, and cushioning means carried by said bolster and spaced from said casing so as to be entirely free thereof and spaced from said rockable mount and free of the action of said resilient means and movable on said bolster for dampening any rocking motion of the bolster in its socket.

3. In a spindle, an assembly unit comprising a bolster having a bulbous surface, a socket having a seat for said surface threaded for attachment to a casing, resilient means for urging said bulbous surface and seat together, and a sleeve carried by said bolster at the lower end thereof and free of the action of said resilient means and movable for providing a cushioning.

4. In a spindle, a blade, a bolster for supporting said blade, said bolster being provided with a bulbous, longitudinally-elongated surface, a casing having fixed thereto a correspondingly-shaped socket to receive said surface for rockably supporting the bolster in suspended position in the casing, resilient means for drawing said bulbous surface into said socket, and a sleeve carried by said bolster and free and independent of the action of said resilient means and spaced from said rockable mount and movable for dampening any rocking motion of the bolster in its socket.

5. A spindle comprising a blade, a bolster for

supporting said blade and provided at one end portion thereof with a bulbous substantially longitudinally elongated bearing surface and a shoulder spaced from the said bearing surface, a casing for receiving said bolster and having a recess thereon of a shape corresponding to said bulbous bearing surface for receiving the same for rockably supporting the bolster in suspended position in the casing, said casing having an abutment thereon, a compression spring extending between said shoulder and abutment for resiliently drawing said bulbous surface into said recess, and a sleeve positioned about said bolster and in spaced relation therewith and at a location on the opposite side of said shoulder from said spring and free of the action thereof and movable for dampening any rocking motion of the bolster in its socket.

6. A spindle comprising a blade, a bolster for supporting said blade and provided at one end portion thereof with a bulbous bearing surface and a shoulder spaced from said bulbous bearing surface, a casing for receiving said bolster and having at the upper end thereof a socket threadingly secured thereto providing an abutment extending inwardly in said casing, said socket having a recess thereon of a shape corresponding to said bulbous surface for receiving the same for rockably supporting the bolster in suspended position in the casing a compression spring extending between said shoulder and abutment for resiliently drawing said bulbous surface in said recess, and a sleeve positioned about said bolster and in spaced relation therewith and positioned thereon at a location on the opposite side of said shoulder from said spring and movable relative to said bolster and shoulder and free of the action of said spring for dampening any rocking motion of the bolster in its socket.

7. A spindle comprising a blade, a bolster for supporting said blade and provided at one end portion thereof with a bulbous bearing surface, a casing for receiving said bolster and provided at the upper end thereof with a socket having a cupped recess of a shape corresponding to said bulbous bearing surface for receiving the same for rockably supporting the bolster in suspended position in the casing, washers secured, in spaced relation with respect to each other, to the lower portion of said bolster, a coil spring extending between said socket and the innermost washer for resiliently drawing said bulbous surface in said recess, a sleeve about said bolster and positioned in the space between said washers and relatively movable both longitudinally and laterally with respect to said bolster and free of the action of said spring for dampening any rocking motion of the bolster in its socket, said socket being sufficiently spaced from said bolster and washer to provide for a circulation of lubricant thereabout.

8. In a spindle, an assembly unit comprising a bolster having a bulbous surface, a socket having a cupped recess thereon of a shape to correspond to said bulbous surface for receiving the same therein, a washer secured to said bolster at a location spaced from said bulbous surface, a spring about said bolster and positioned between and with the ends thereof abutting said socket and said washer for urging said bulbous surface into said recess, a sleeve about said bolster positioned thereon on the opposite side of said washer from said spring and free of the action thereof and in spaced relation with the surface of said bolster providing a space therebetween, and a second washer secured to the end of said bolster for securing said sleeve to said bolster and between said washer.

9. In a spindle, an assembly unit comprising a bolster having a bulbous surface, a socket having a cupped recess thereon of a shape to correspond to said bulbous surface for receiving the same therein, a washer secured to said bolster at a location spaced from said bulbous surface, a spring about said bolster positioned between and with the ends thereof abutting said socket and said washer for urging said bulbous surface into said recess, a sleeve about the lower end of said bolster positioned thereon on the opposite side of said washer from said spring and free of the action thereof and in spaced relation with the surface of said bolster providing a space therebetween, and a second washer secured to the end of said bolster for securing said sleeve to said bolster and between said washers, said socket having a threaded portion thereon for securing said assembly unit to a casing.

10. In a spindle, an assembly unit comprising a bolster having a bulbous surface, a non-metal socket having a cupped recess thereon of a shape to correspond to said bulbous surface for receiving the same therein, a washer secured to said bolster at a location spaced from said bulbous surface, a spring about said bolster positioned between and with the ends thereof abutting said socket and said washer for urging said bulbous surface into said recess, a sleeve about the lower end of said bolster positioned thereon on the opposite side of said washer from said spring and in spaced relation with the surface of said bolster providing a space therebetween, and a second washer secured to the end of said bolster for securing said sleeve to said bolster and between said washers.

11. In a spindle, a blade, a bolster for supporting said blade, said bolster being provided with a bulbous surface and a shoulder thereon at a location spaced from said surface, a casing having a correspondingly shaped socket fixed thereto to receive said bulbous surface for rockably supporting the bolster in suspended position in the casing said casing having a shoulder thereon, and a spring positioned about said bolster and between and abutting said shoulders, for drawing said bulbous surface into said socket, said bulbous surface being substantially longitudinally elongated so that the bolster will have a tendency to rise in its seat upon the rocking of said bolster and thereby increase the tension of said spring to retard the rocking action of said bolster.

ALBERT E. WINSLOW.