May 5, 1925. 1,536,999

F. Z. BARRUNDIA

CONTROLLING SWITCH

Filed April 25, 1924 2 Sheets-Sheet 1

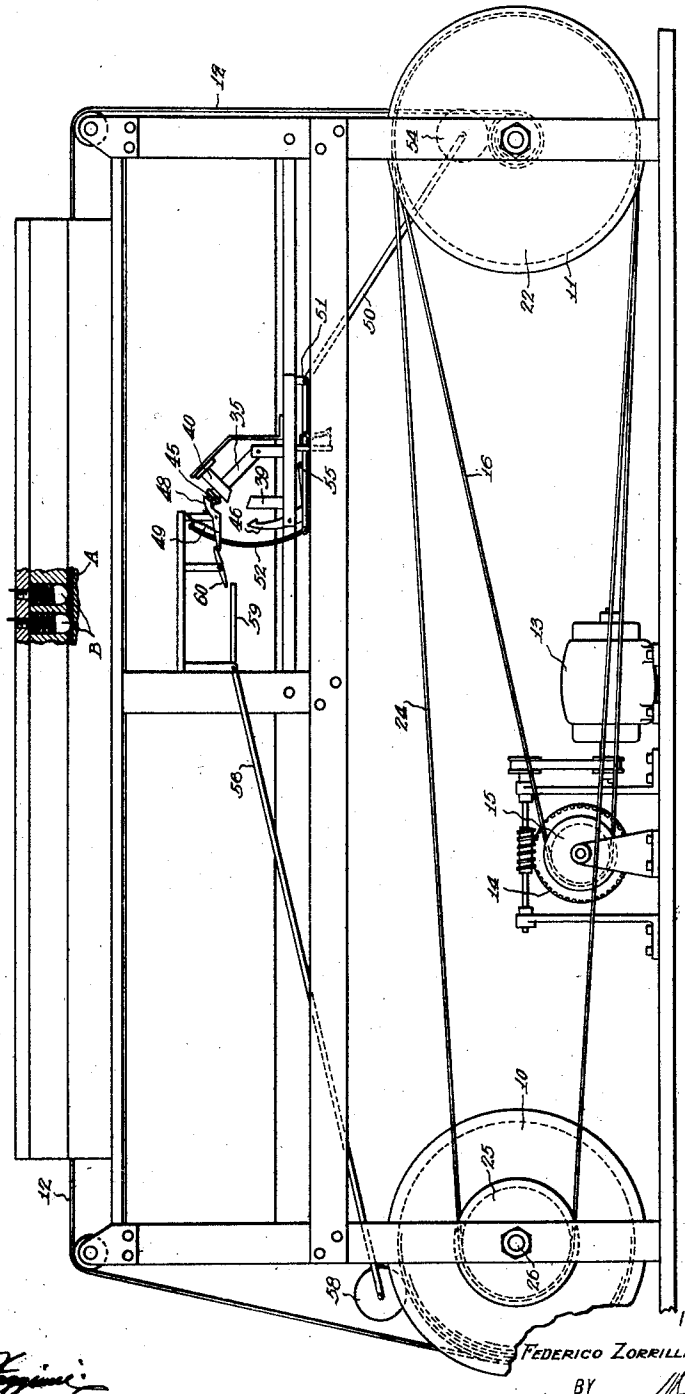

Fig. 1.

WITNESSES

Frank L. Fazzini

Hugh H. Ott

INVENTOR

FEDERICO ZORRILLA BARRUNDIA.

BY

ATTORNEYS

May 5, 1925. 1,536,999

F. Z. BARRUNDIA

CONTROLLING SWITCH

Filed April 25, 1924 2 Sheets-Sheet 2

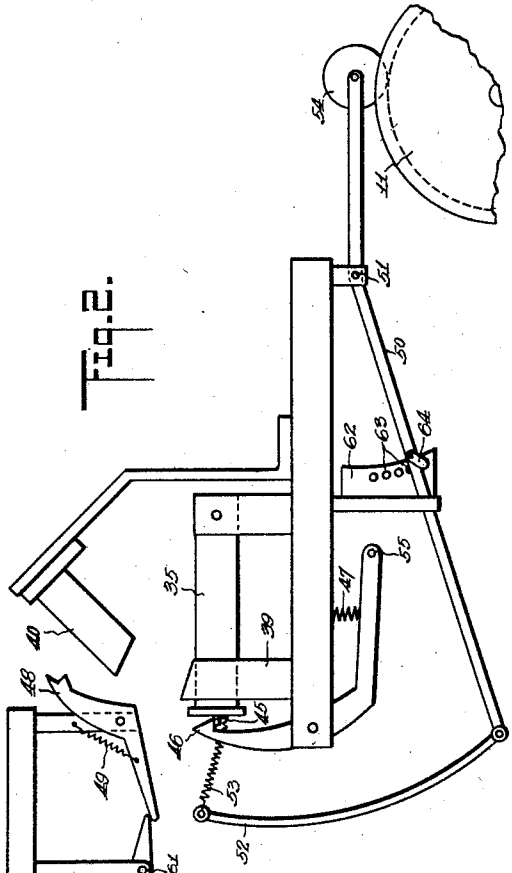

Fig. 2.

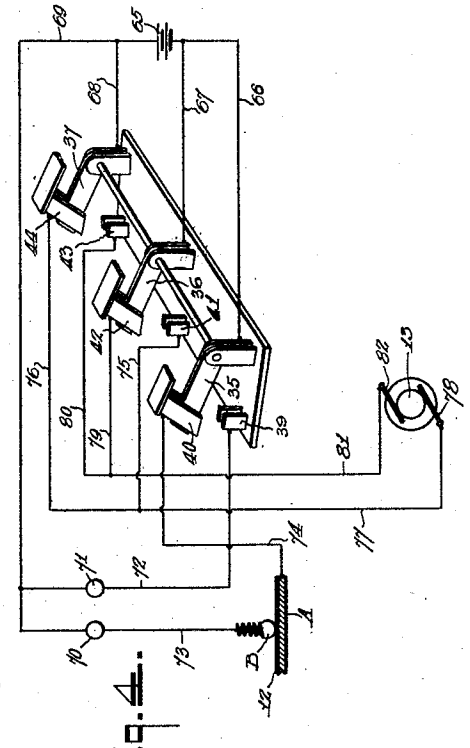

Fig. 4.

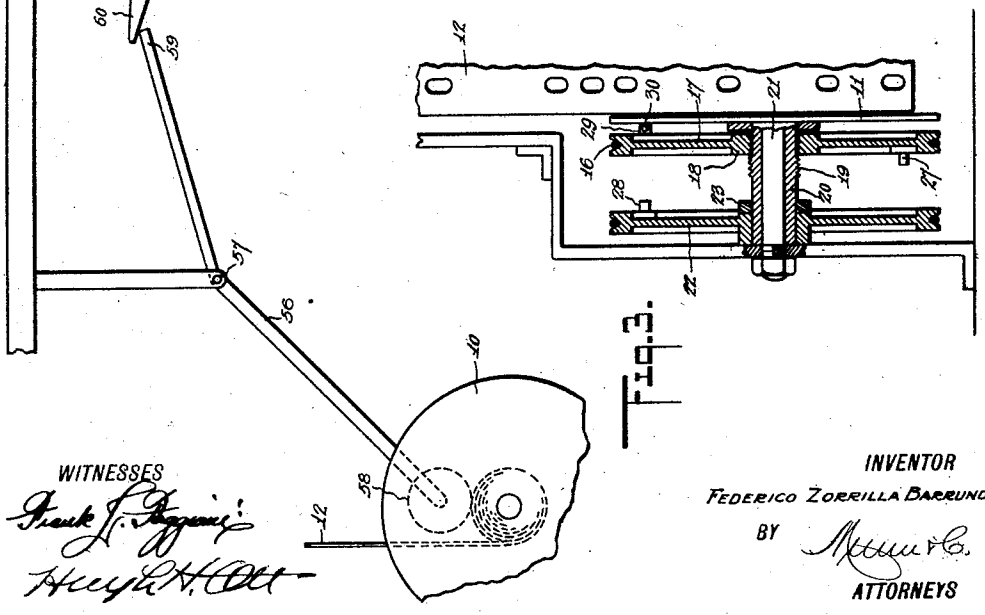

Fig. 3.

WITNESSES

Frank L. Hagney

Hugh H. Hall

INVENTOR

FEDERICO ZORRILLA BARRUNDIA.

BY Munn & Co.

ATTORNEYS

Patented May 5, 1925. 1,536,999

UNITED STATES PATENT OFFICE.

FEDERICO ZORRILLA BARRUNDIA, OF GUANAJUATO, MEXICO.

CONTROLLING SWITCH.

Application filed April 25, 1924. Serial No. 708,993.

To all whom it may concern:

Be it known that I, FEDERICO ZORRILLA BARRUNDIA, a citizen of Mexico, and a resident of Guanajuato, Mexico, have invented a new and Improved Controlling Switch, of which the following is a full, clear, and exact description.

This invention has relation to electric controlling switches which are particularly designed for use in connection with moving electric display or advertising signs, the same being in the nature of an improvement over the controlling switch set forth in my co-pending application Serial No. 659,298.

In moving electric display or advertising signs with which the present controlling switch is designed for use, a pair of reels or drums are provided to which the opposite ends of a perforated tape or strip are attached, to be alternately wound from one reel to the other and with the intermediate portion of the tape passing between stationary and movable contact elements for producing words and sentences on a bank of lamps connected with said contact elements. In the switch mechanism as set forth in the co-pending application above referred to, certain objectionable features have become apparent as follows: First, variations in the length of the tape or strip required an adjustment in the controlling mechanism to compensate for the same due to the fact that the reversing means depended entirely upon the diameter of the convolutions of the strip upon one of the reels or drums; second, no means were provided to compensate for the variation in the diameter of the convolutions of the strip wound upon the drum whereby to maintain the movement of the tape or strip at a uniform speed throughout is movement; third, the absence of a means for positively locking the movable switch arms in engagement with their several contacts until the precise moment at which they should be released for a change of movement prevented the positive and practical working of the device.

It is, therefore, an object of the present invention to overcome the above recited objections and disadvantages by first providing a controlling switch mechanism in which the change of direction of movement of the tape is actuated by the amount of tape which is unwound from each drum or reel so that the device will effectually operate irrespective of the length of the tape used without the necessity of adjustment or interchanging of parts; second, by the provision of means for reducing the speed of the driving element coincident with the increase in the diameter of the convolutions of the tape wound upon the drum or reel upon which it is being wound; and third, by providing locking means for retaining the switch arms in engagement with their various contacts until immediately prior to the complete unwinding of the tape from the reel or drum from which it is being unwound.

With the above recited and other objects in view, the invention resides in the novel construction set forth in the following specification, particularly pointed out in the appended claims and illustrated in the accompanying drawings, it being understood that the right is reserved to embodiments other than those actually illustrated herein to the full extent indicated by the general meaning of the terms in which the claims are expressed.

In the drawings—

Figure 1 is a side view of a controlling switch mechanism constructed in accordance with the invention and illustrating the same employed in connection with a moving electric display sign controlling means.

Fig. 2 is a fragmentary detail enlarged side view of the controlling switch mechanism illustrating the same shifted for driving in a reverse direction to the position in which it is illustrated in Fig. 1.

Fig. 3 is a fragmentary end view with parts in section illustrating the reversible clutch mechanism.

Fig. 4 is a diagrammatic view of the controlling switch circuits.

Referring to the drawings by characters of reference, 10 and 11 designate respectively a pair of drums or reels mounted for rotation and to which the opposite ends of a flexible tape or strip 12 are attached for alternately winding the slack of the tape from one drum or reel to the other. Where the tape is principally used in the capacity as a means for controlling the circuits to a bank of electric lamps to produce words and sentences, the same is perforated and passes between a common stationary contact plate A and a plurality of movable contact elements B. It is, of course, understood that the same is active during its movement in

one direction only and thus in the present instance during its movement from the drum or reel 10 to the drum or reel 11. The driving element consists of an electric motor 13 which is operatively connected through any suitable reducing mechanism 14 to a drive pulley 15, which pulley in turn is operatively connected by a belt 16 with a sheave 17 having an interiorly threaded hub 18 engaging the right hand threaded portion 19 of a hollow shaft 20. The drum or reel 11 is loosely mounted on a shaft 21 which extends axially through the hollow shaft. A second sheave or pulley 22 is loosely mounted on the hollow shaft for rotation and maintained against axial movement by a collar 23. The sheave or pulley 22 is in turn operatively connected by a belt 24 with a sheave or pulley 25 secured to a rotary shaft 26 to which the drum or reel 10 is secured for rotation. The confronting side faces of the sheaves 17 and 22 are provided with interengageable clutch elements 27 and 28 and the sheave or pulley 16 and reel 11 are provided on their confronting side faces with interengageable clutch elements 29 and 30. The motor 13 is designed to drive the drive pulley 15 in opposite directions by a change in the polarity of the same and it thus follows that clockwise movement imparted to the sheave 17 will cause the same to move axially toward the drum or reel 11 until the clutch element 29 engages the clutch element 30 just as the interiorly threaded hub 18 is disengaged from the threaded portion 19 of the hollow shaft 20. This couples the reel or drum 11 with the driving motor so that the said reel winds the tape thereon and from the reel or drum 10. The changing of the polarity of the motor 13 to drive the same in an opposite direction will effect a counter clockwise driving of the sheave 17, the interiorly threaded hub of which again engages the exteriorly threaded portion 19 of the hollow shaft 20 and axially moves said sheave toward the sheave or pulley 22, thereby uncoupling the sheave 17 from the drum 11 and coupling said sheave 17 with the sheave or pulley 22 through the interengageable clutch elements 27 and 28. This operatively connects the drum or reel 10 with the motor for winding the tape 12 upon the drum 10 and unwinding the same from the drum 11.

The mechanism for automatically changing the direction of movement of the tape by changing the polarity of the motor consists of a switch which includes switch arms 35, 36 and 37, the former being capable of movement into engagement respectively with the spaced contact elements 39 and 40, the switch arm 36 being capable of movement respectively into engagement with the contacts 41 and 42 and the latter switch arm 37 being respectively capable of movement into engagement with the spaced contacts 43 and 44. The said switch arms 35, 36 and 37 are connected to each other for simultaneous movement and one of the said switch arms 35 is provided with a keeper lug 45 when the switch arms 35, 36 and 37 are engaged with their lower contacts 39, 41 and 3. A second latch 48 is normally moved by a spring 49 to engage the keeper lug 45 whereby to lock the switch arms 35, 36 and 37 into engagement with their contacts 40, 42 and 44. A lever 50 which is fulcrumed as at 51 is provided with an angular extremity 52 which is connected by a contractile spring 53 with one of the switch arms. The said lever is provided at its opposite end with a roller 54, which roller bears upon the convolutions of the tape wound upon the drum or reel 11. As the convolutions are wound and unwound from the drum or reel 11 it is of course obvious that the lever 50 is swung on its fulcrum, whereby the angular extremity 52 which is connected by the contractile spring 53 with one of the switch arms is moved in opposite directions to exert a pulling tension for moving the switch arms from engagement with one of their contacts to engagement with the other of their contacts or vice versa. In order to actuate the latch 46 to release the same from locking engagement with the lug 45 when engaged therewith, the said latch is provided with a pin 55 which is designed to be engaged by a portion of the lever 50 immediately prior to the complete unwinding of the tape or strip 12 from the reel or drum 11. At this time the extremity 52 of the lever which has been moved toward the contacts 40, 42 and 44 will have produced a sufficient tension on the contractile spring 53 which is connected with one of the switch arms to effect the moving of said arms from out of engagement with their contacts 39, 41 and 43 to engagement with the contacts 40, 42 and 44. When the arms are engaged with the latter contacts the latch 48 will engage with the keeper lug 45 to retain the same in this position whereby the polarity of the motor is changed for driving the tape in the opposite direction, namely, from the drum or reel 10 to the drum or reel 11. The winding of the tape upon the drum or reel 11 swings the lever 50 in the opposite direction so that its terminal 52 moves toward the contacts 39, 41 and 43 to exert a pulling tension on the switch arms toward said contacts. In order to provide means for releasing the latch 48, a second lever 56 is fulcrumed as at 57 and is provided with a weighted roller 58 at one end which cooperates with the periphery of the convolutions of the tape wound upon the drum or reel 10. The free end 59 of the lever 56 is designed to engage with a trip member 60 which is fulcrumed as at 61 and which

trip member engages with the free end of the latch 48 whereby said latch is released from engagement with the keeper lug 45 immediately prior to the complete unwinding of the tape convolutions from the drum 10. It will thus be seen under this arrangement that the releasing of the latches is accomplished in each instance by the minimum amount of tape convolutions upon the drums 10 and 11, thus rendering the controlling mechanism operable irrespective of convolutions in the length of the tape. As heretofore explained the tape when used in connection with a moving electric display sign operates said sign only when moving in a direction from the reel 10 to the reel 11 and it, therefore, follows that as the amount of convolutions being wound on the reel 11 increases with the reel traveling at the same rate of speed, the speed of the tape will increase or accelerate unless means is provided to compensate for the increase in the rate of speed. In order to provide means for compensating for said increase and to maintain the movement at a substantially uniform rate of speed, a rheostat 62 is provided, the contact members 63 of which are engaged by a movable contact member 64 carried by the lever 50. It thus follows that as the amount of tape fed onto the reel 11 increases the rheostat functions to decrease the speed of the driving motor proportionately whereby the tape is fed at a substantially uniform rate of speed in the direction mentioned. In view of the fact that the wiring system which will be hereinafter set forth cuts out the moving electric sign when the tape is traveling in a direction from the reel 11 to the reel 10, it is immaterial whether the speed varies in the opposite direction, and as a matter of fact it will be noted that the ratio of the diameter of the sheave 25 with respect to the sheaves 17 and 22 is such as to cause a more rapid driving of the tape in a direction from the reel 11 to the reel 10.

As illustrated in the wiring diagram of Fig. 4, 65 is a source of supply from one pole of which conductor wires 66 and 67 lead respectively to and are connected with the switch arms 35 and 36 and from the opposite pole of which conductor wires 68 and 69 lead respectively to the switch arm 37 and to a bank of lamps 70 for the moving sign and a bank of lamps 71 for a stationary sign. From the stationary sign the conductor wire 72 leads to the contact 39. From the bank of lamps 70 conductor wires 73 lead to the movable contacts B. From the stationary contact plate A a conductor wire 74 leads to the contact 40. From the contacts 41 and 44 conductor wires 75 and 76 lead to a common conductor wire 77 to one of the poles or brushes 78 of the motor 13. From the contacts 42 and 43 conductor wires 79 and 80 lead to a common conductor wire 81 connected with the opposite pole or brush 82 of the motor 13.

In use and operation, assuming the tape is moving from the reel 10 onto the reel 11, it will be observed that the current is flowing from one pole of the source of supply 65 through the conductor 67, through the switch arm 36, the contact 42, conductor 79, conductor 81, the pole or brush 82, the motor 13, the opposite pole or brush 78, the conductor 77, the conductor 76, the contact 74, the switch arm 37, the conductor 68 and thence back to the opposite pole of the source of supply. At the same time a circuit is completed from the source of supply through the conductor 66, switch arm 35, contact 40, conductor 74, contact plate A, through the movable contacts B registering with the openings in the tape 12, through the conductor 73, the lamps of the bank 70, the conductor 69 and thence to the source of supply 65. As the convolutions of the tape wind upon the reel 11, the weighted roller 54 swings the lever 50 to cause its extremity 52 connected with one of the switch arms to gradually move in a direction toward the contacts 39, 41 and 43. In view of the fact that the latch 48 engaging with the keeper lug 45 under the action of its spring 49 retains the switch arms in engagement with the contacts 40, 42 and 44, the contractile spring 53 can effect no movement of the switch arms until the latch 48 is released from the keeper lug 45. This releasing operation is only accomplished when the amount of the tape 12 on the drum or reel 10 is almost completely unwound therefrom, at which time the weighted roller 58 will effect a swinging of the lever 56 until its free end 59 operates the trip 60, which in turn swings the latch 48 against its spring 49 to release position. At this time the contractile spring 53 will, due to the movement of the terminal 52 of the lever 50, have exerted a sufficient pulling tension to snap the switch arms 35, 36 and 37 into engagement with the contacts 39, 41 and 43. When said switch arms are engaged with said contacts the polarity of the motor will be changed and the current will now flow from the source of supply through the conductor 67, switch arm 36, contact 41, conductor 75, conductor 77, motor brush 78, motor 13, motor brush 82, conductor 81, conductor 80, contact 43, switch arm 37, conductor 68 to the opposite pole of the source of supply 65. At the same time the switch arm 35 being disengaged from the contact 40 and engaged with the contact 39 will break the circuit to the contact plate A and establish a circuit from the source of supply 65, through the conductor 66, switch arm 35, contact 39, conductor 72, the stationary sign lamps 71, conductor 69 and back to the

source of supply. The stationary sign lamps 71 will thus be energized to produce a stationary display while the tape is being rewound from the reel 11 onto the reel 10. As the convolutions of the tape on the reel 11 decrease, it is obvious that the weighted roller 54 carried by the lever 50 will move the extremity 52 of the lever 50 toward the contacts 40, 42 and 44 thereby exerting a pulling tension on the switch arms toward said contact. Immediately prior to the complete unwinding of the tape from the reel 11, the lever 50 will engage the pin 55 of the latch 46 and will swing the latch to a release position against the action of the spring 47, thus disengaging the latch from the keeper lug 45 and permitting a pulling tension of the spring 53 to snap the switch arms 35, 36 and 37 into engagement with the contacts 40, 42 and 44. This will reverse the polarity of the motor 13, reestablish the circuit to the lamps 70 of the moving sign and break the circuit to the lamps 71 of the stationary sign. As the increasing convolutions of the tape are wound on the drum 11 the lever 50 is swung on its fulcrum 51. The rheostat functions to compensate for the increase speed of movement of the tape by successively decreasing the speed of the motor, thus maintaining the speed of movement of the tape at a substantially uniform rate.

I claim:

1. The combination with an apparatus including a pair of reels, a tape or strip connected at its opposite ends for alternate winding of the same from one to the other and reversible driving mechanism, of means operable by the amount of tape left on that one of the reels from which the same is being unwound, for reversing the driving mechanism.

2. The combination with an apparatus including a pair of reels, a tape or strip connected at its opposite ends to said reels for alternate winding of the same from one to the other and a reversible driving mechanism including an electric motor, of a controlling switch for changing the polarity of the motor comprising a movable switch element, means operable by the amount of tape wound upon one of the drums for effecting a pulling tension on said movable switch element to move the same in opposite directions, locking means for retaining said movable switch element in its shifted positions, and means operable by the amount of tape remaining on the reel from which the same is being unwound for releasing the locking means to permit the shifting of the movable switch element to its changed position.

3. The combination with an apparatus including a pair of reels, a tape or strip connected at its opposite ends to said reels for alternate winding of the same from one to the other and a reversible driving mechanism including an electric motor, of a controlling switch for changing the polarity of the motor comprising a movable switch element, means operable by the amount of tape wound upon one of the drums for effecting a pulling tension on said movable switch element to move the same in opposite directions, locking means for retaining said movable switch element in its shifted positions, means operable by the amount of tape remaining on the reel from which the same is being unwound for releasing the locking means to permit the shifting of the movable switch element to its changed position, and means for maintaining the movement of the tape in one direction at a uniform rate of speed to compensate for the increase of the diameter of the convolutions of the tape being wound upon said reel.

4. The combination with an apparatus including a pair of reels and a tape or strip connected at its opposite ends to said reels for alternate winding from one reel to the other, of mechanism for automatically effecting the same, comprising a reversible driving element, means for reversing the direction of movement of the driving element, and means for maintaining the movement of the tape at a substantially uniform rate of speed during its passage from one reel to the other.

5. The combination with an apparatus including a pair of reels and a tape or strip connected at its opposite ends to said reels for alternate winding from one reel to the other, of mechanism for automatically effecting the same, comprising an electric motor, a switch for changing the polarity of said motor to drive the same in opposite directions, said switch including movable contact members, a pair of stationary contact members for each movable member, means for locking the movable members respectively in engagement with the stationary contact members, means engaging the convolutions of the tape wound upon one of the reels for exerting a pulling tension on the movable contact members whereby to move the same in opposite directions for changing the polarity of the motor, said tape engaging means being operable immediately prior to the complete unwinding of the tape from the said reel to release one of the locking means of the movable contact members, and a second means engaging the convolutions of the tape on the other reel immediately prior to the complete unwinding of the tape from said reel to release the other of said locking means for the movable contact members.

6. The combination with an apparatus including a pair of reels and a tape or strip connected at its opposite ends to said reels for alternate winding from one reel to the

other, of mechanism for automatically effecting the same, comprising an electric motor, a switch for changing the polarity of said motor to drive the same in opposite directions, said switch including movable contact members, a pair of stationary contact members for each movable member, means for locking the movable members respectively in engagement with the stationary contact members, means engaging the convolutions of the tape wound upon one of the reels for exerting a pulling tension on the movable contact members whereby to move the same in opposite directions for changing the polarity of the motor, said tape engaging means being operable immediately prior to the complete unwinding of the tape from the said reel to release one of the locking means of the movable contact members, a second means engaging the convolutions of the tape on the other reel immediately prior to the complete unwinding of the tape from said reel to release the other of said locking means for the movable contact members, and means for maintaining the movement of the tape in one direction at a uniform rate of speed to compensate for the increase of the diameter of the convolutions of the tape which is being wound upon said reel.

7. The combination with an apparatus including a pair of reels and a tape or strip connected at its opposite ends to said reels for alternate winding from one reel to the other, of mechanism for automatically effecting the same, comprising an electric motor, a switch for changing the polarity of said motor to drive the same in opposite directions, said switch including movable contact members, a pair of stationary contact members for each movable member, means for locking the movable members respectively in engagement with the stationary contact members, means engaging the convolutions of the tape wound upon one of the reels for exerting a pulling tension on the movable contact members whereby to move the same in opposite directions for changing the polarity of the motor, said tape engaging means being operable immediately prior to the complete unwinding of the tape from the said reel to release one of the locking means of the movable contact members, a second means engaging the convolutions of the tape on the other reel immediately prior to the complete unwinding of the tape from said reel to release the other of said locking means for the movable contact members, and means for maintaining the movement of the tape in one direction at a uniform rate of speed to compensate for the increase of the diameter of the convolutions of the tape which is being wound upon said reel, said latter means consisting of a rheostat operatively connected with the motor and operable by the first mentioned tape engaging means.

8. The combination with a pair of reels and a tape secured at its opposite ends thereto and adapted to be alternately wound from one reel to the other, of an automatic mechanism for changing the direction of movement of said tape, comprising an electric motor, a switch for changing the polarity of said motor to drive the same in opposite directions, said switch including a pivoted switch element, spaced contacts with which the same is respectively engageable, means for locking the switch element in engaged position with the contacts, means engaging the convolutions of the tape wound upon one of the reels for exerting a pulling tension upon the switch element to effect its disengagement from the contact with which it is engaged and for effecting the movement of the same toward the opposite contact member, said tape engaging means adapted to effect the release of the locking means for the switch element immediately prior to said tape engaging means reaching the limit of its movement in one direction, and means engaging the convolutions of the tape wound upon the other reel for effecting the release of the locking means for the movable switch element immediately prior to said latter means reaching the limit of its movement in one direction by the unwinding of the tape from its reel.

FEDERICO ZORRILLA BARRUNDIA.