O. L. LEWIS.

TRACTOR.

APPLICATION FILED NOV. 29, 1920.

1,403,259. Patented Jan. 10, 1922.

3 SHEETS—SHEET 1.

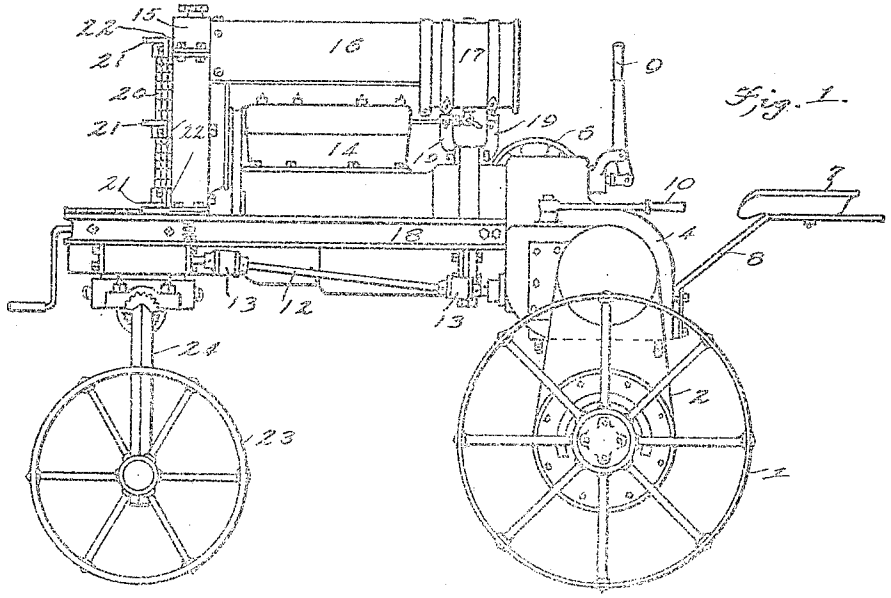

Fig. 1.

Fig. 2.

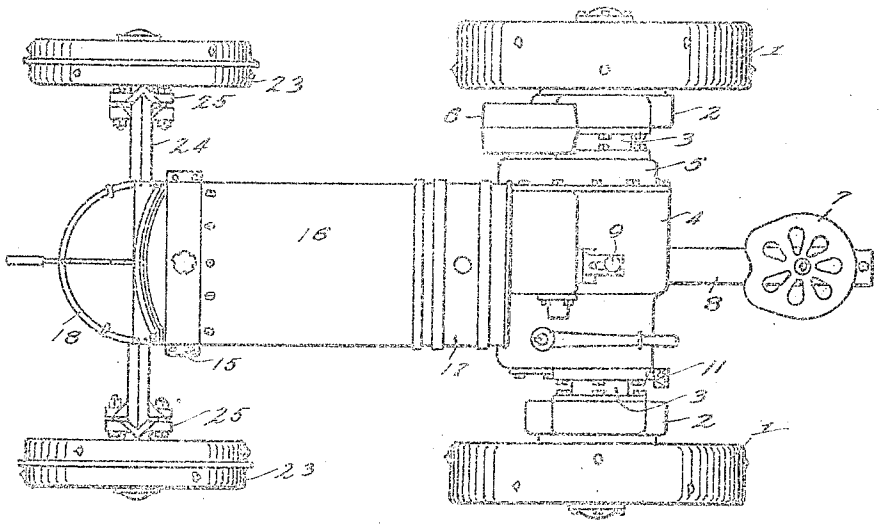

Otto Leroy Lewis, INVENTOR.

BY Munn & Co

ATTORNEYS.

O. L. LEWIS.

TRACTOR.

APPLICATION FILED NOV. 29, 1920.

1,403,259. Patented Jan. 10, 1922.

3 SHEETS—SHEET 2.

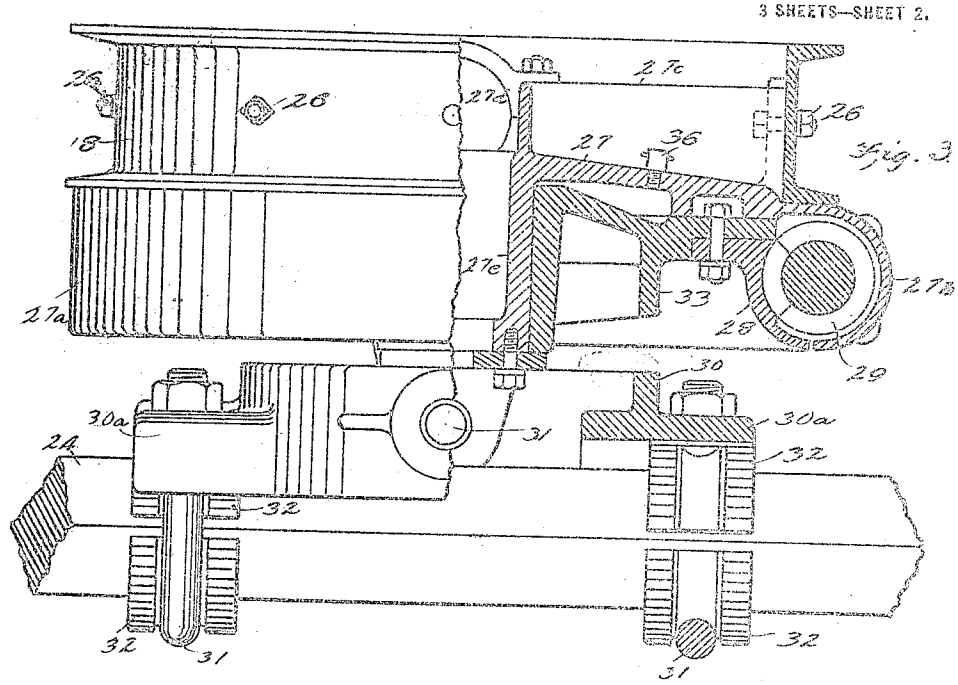

Fig. 3.

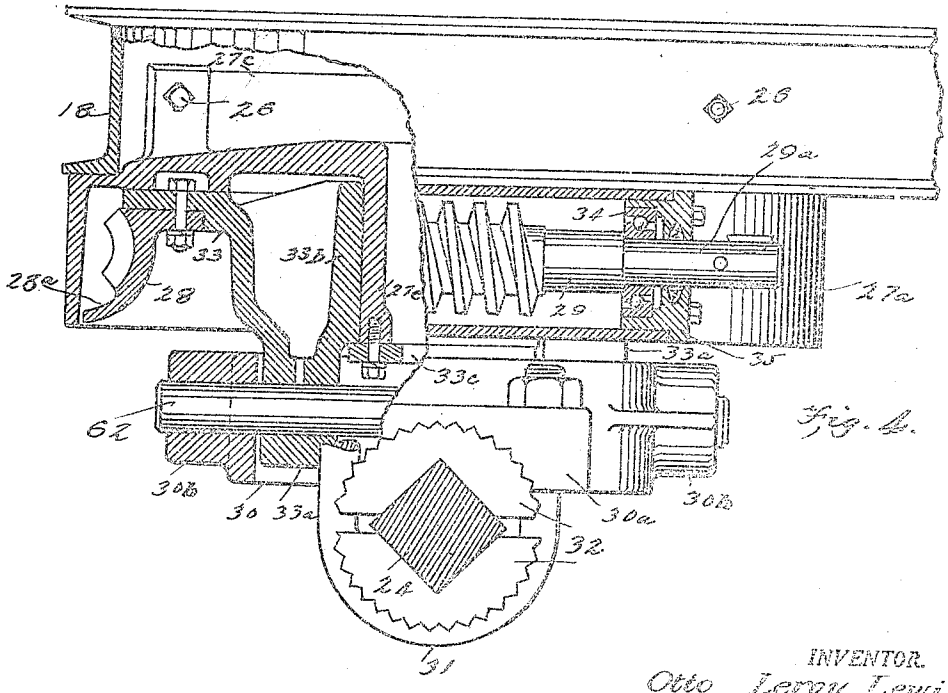

Fig. 4.

INVENTOR.
Otto Leroy Lewis
BY Munn & Co
ATTORNEYS.

O. L. LEWIS.

TRACTOR.

APPLICATION FILED NOV. 29, 1920.

1,403,259. Patented Jan. 10, 1922.

3 SHEETS—SHEET 3.

Fig. 5.

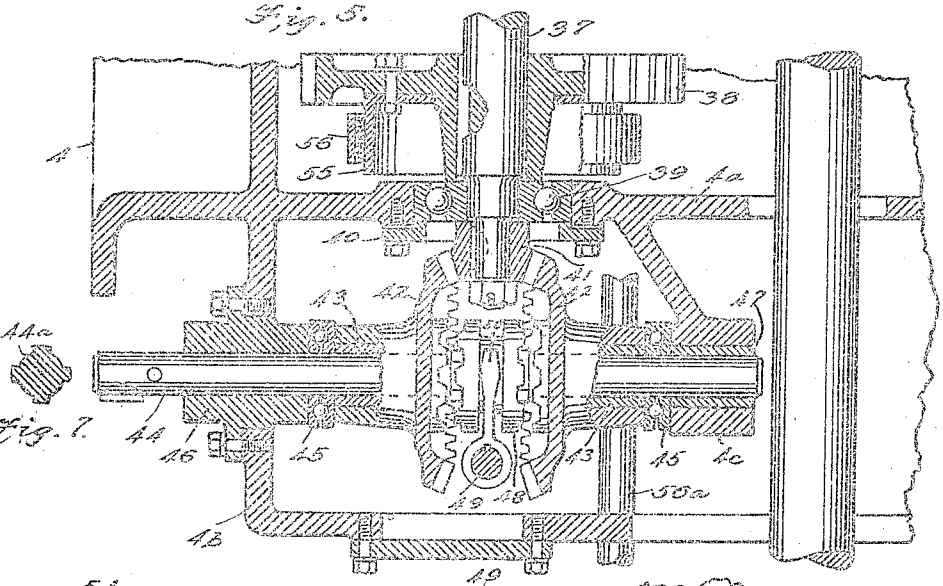

Fig. 7.

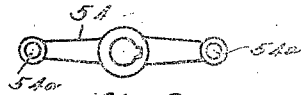

Fig. 8.

Fig. 6.

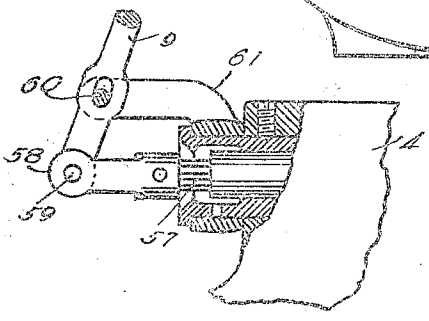

Fig. 9.

INVENTOR.
Otto Leroy Lewis,
BY Munn & Co
ATTORNEYS.

UNITED STATES PATENT OFFICE.

OTTO LEROY LEWIS, OF HOUSTON, TEXAS.

TRACTOR.

1,403,252. Specification of Letters Patent. Patented Jan. 10, 1922.

Application filed November 23, 1920. Serial No. 427,182.

To all whom it may concern:

Be it known that I, OTTO LEROY LEWIS, a citizen of the United States, and a resident of Houston, in the county of Harris and State of Texas, have invented certain new and useful Improvements in Tractors, of which the following is a specification.

My present invention relates generally to tractors, and more particularly to a tractor of the general nature described and claimed in my co-pending application, Serial No. 399,599, which was filed July 28, 1920. In certain respects my present invention involves but a rearrangement of the parts of my previous application, for instance in the transposition of the driving wheels from the front to the rear, so as to effect considerable improvement in so far as simplicity of control is concerned. By this change, which necessarily involves a re-arrangement of the transmission housing to the sides of which the drive wheel supporting means are adjustably connected, I obtain a much more rigid construction and succeed in eliminating a number of parts so as to add to the durability and appearance of the tractor.

In certain other respects, as for instance the steering by means of the front wheels alone, and even this through power connection, my present improvements are somewhat more of a departure from my previous application.

These and certain other changes will be better understood from the following description, in which reference is made to the accompanying drawings, forming a part of this specification, and wherein,

Figure 1 is a side view of my improved tractor complete,

Figure 2 is a top plan view thereof,

Figure 3 is an enlarged front view of the central portion of the front axle and its supports, partly broken away and in section,

Figure 4 is a sectional side view of the parts shown in Figure 3,

Figure 5 is an enlarged horizontal section through a portion of the transmission case showing the clutch controlled means for actuating the steering connections,

Figure 6 is a sectional side view of the parts shown in Figure 5,

Figure 7 is a detail section through the intermediate clutch supporting portion of the shaft of Figure 5,

Figure 8 is a plan view of a slightly modified form of lever controlling the power actuated steering connections, and

Figure 9 is a detail sectional view of the clutch lever and its supports.

According to my present improvements the drive wheels 1 are disposed at the rear of the tractor and mounted at the lower ends of shiftable casings 2, the upper ends of which are movably supported by means of distance pieces 3 in connection with one side of the transmission case 4 and the transmission case cover 5 at the other side. The driving connections of the drive wheels 1 extend from the transmission mechanism downwardly through the wheel supporting and adjusting casings 2 in the same manner as in my application above referred to, the movable connections of these wheel supporting casings with the transmission case permitting shifting of the drive wheels to raise and lower the frame as may be desired.

In the present construction the shaft extends out from the transmission case 5 and is provided with a belt pulley 6, and the operator's seat 7 is mounted upon a seat supporting bar 8 which is bolted as shown in Figure 1 to the rear wall of the transmission case 4.

The clutch and gear shift are controlled by a hand lever 9 and the steering is controlled by a hand lever 10 it being noted from Figure 2 in particular that both of these levers are mounted within convenient reach of the operator's seat 7.

Power for steering purposes is transmitted forwardly from the transmission case 4 to the front of the machine through a shaft 12 having universal joints 13, and braking power is applied through a foot lever 11.

The motor 14, with a forward radiator 15, a hood 16 over the motor, and a fuel tank 17, the latter of which is mounted on supports 19 above the forward portion of the transmission case 4 and supports the rear end of the hood 16 whose forward end is secured to the radiator 15, are, like the transmission case 4, supported in a U-shaped

horizontally disposed frame 18, the front portion of which is curved substantially on a semi-circle and the rear end of which is bolted to the transmission case as seen in Figure 1. A wire screen 20 is preferably bolted across the front of the radiator between angle irons 21 and flat iron straps 22 so as to cooperate therewith in the protection of the radiator.

The front wheels 23 are adjustably mounted on the downturned side portions of the front axle 24 of inverted U-shape, by means of clamps 25 at the inner ends of the wheel spindle, and it will be noted from Figures 3 and 4 in particular that an approximately circular supporting member 27 is securely bolted by bolts 26 in the forward portion of the frame 18. This supporting member 27 has a depending substantially cylindrical portion 27^a below the frame 18 which houses a large horizontally disposed worm wheel 28, and is provided at one side with a horizontally cylindrical enlargement 27^b which houses and supports a worm 29 in engagement with one side of the worm wheel 28.

In the frame 18 upon the upper side of the supporting member 27 are ribs 27^c which support a bearing 27^d adapted to receive a boss and the like at the lower front portion of the motor 14 for the support of the latter, and this supporting member 27 is also provided with a depending cylindrical hub 27^e within and concentric with its cylindrical lower extension 27^a, forming a vertical pivot about which the front axle 24 is rotatable for steering purposes.

For the foregoing purpose front axle 24 is securely though adjustably clamped at a point intermediate its ends to a ring 30 which latter has for this purpose diametrically outstanding lugs 30^a provided with concaved and serrated lower surfaces forming seats in which externally serrated split collars 32 are normally held in a rigid manner by U-bolts 31. As seen particularly in Figure 4 the inner surfaces of the split collars fit the squared surface of the axle so that the latter under normal circumstances is rigidly held and is still permitted adjustment by loosening the U-bolts 31.

The ring 30 is also provided with diametrical bearing extensions 30^b disposed in a plane at right angles to the diametrical plane of the lugs 30^a, these bearing portions 30^b receiving the opposite ends of a pin 62 which extends through depending lugs 33^a of a member 33, rotatable by virtue of its hub 33^b around the hub portion 27^e of the supporting member 27. This member 33 has an upper upstanding flange to which the worm wheel 28 is securely fastened as seen in Figures 3 and 4 and is held in place by a ring or washer 33^c secured to the lower portion of the hub 27^e of the supporting member, and it is thus obvious that the two forward guide wheels 23 are vertically shiftable on the pin 62 and the entire front axle is rotatable on the hub 27^e for steering purposes, under control of the worm 29 the latter of which is mounted in bearings 34 as seen in Figure 4 and has a short rearwardly extending shaft connecting with the front universal joint 13 before mentioned.

The rear universal joint 13 connects with the forward end of a shaft 44 rotatably mounted in bearings 46 and 47 of a portion 4^b of the transmission case 4, which portion 4^b is separated from the main compartment of the transmission case by a wall 4^a. On the shaft 44 is a pair of spaced opposing bevel gears 42, each rotatable on a bushing 43 against an anti-friction thrust collar 45, and each disposed at one side of a polygonal portion 44^a of the shaft 44, shown in the section, Figure 7, on which a movable clutch collar 48 has a splined connection. This clutch collar, normally free of both of the bevel gears 42, is oppositely faced for engagement with clutch faces carried by these gears and is under control of a shifter yoke 50 secured upon the lower end of a vertical shaft 49 as seen in Figure 5, upon whose upper end is secured the controlling handle 10. The upper portion of shaft 49 has an indentation normally engaged by a ball 51 pressed into place by a spring 52 held by a screw plug 53 as seen in Figure 6.

As seen in Figure 5 the two bevel gears 42 are engaged and simultaneously and continuously rotated, though in opposite directions, by a beveled pinion 41 mounted upon the adjacent end of a shaft 37 which has a gear 38 in the transmission case 4 engaged with any suitable gear of the transmission through which braking power can be applied. This shaft 37 has a bearing 39 in the wall 4^a above mentioned and is provided with a brake hub 55 engaged by a brake band 56, the latter of which is controlled through the usual contracting and expanding connections of a shaft 56^a projecting externally of the portion 4^b of the transmission case and to which the foot lever 11 is connected as shown in Figure 6.

Instead of the hand lever 10 controlling the direction of shifting movement of the clutch collar 48 and consequently direction of power rotation of shaft 44 for steering purposes, I may utilize upon the upper end of the vertical control shaft 49 a double-end arm 54 such as shown in Figure 8, whose ends are apertured as at 54^a for the attachment of flexible control lines or reins in case control of the steering is desired to be effected from a rear or trailing vehicle whose draw bar or cylinder attaching means may be connected to the tractor beneath the transmission case 4.

As before stated the clutch and gear shift control is had by virtue of the handle or lever 9, the clutch and gear shift parts being contemplated as similar to those described in my previous application. For this purpose the lever 9 both swings by virtue of its pivot at 60 upon a rotating arm 61 and shifts on the pivot so as to impart lengthwise reciprocation and rotation to a control shaft 57 to the outer end 58 of which the lever 9 is pivoted at its lower end at 59, as seen in Figure 9. I have not further detailed the gear shifting and clutch controlling parts as their particular characteristics, included in my above application, have no part in the present improvements although the general nature of the latter obviously admit of more ready and more simple control than is permitted by the tractor structure of my previous application.

I claim:

1. A tractor including a frame, a motor in the frame, a transmission case rearwardly of the motor, rear driven wheels, a rotatable steering member in the forward portion of the frame, front steering wheels, an axle on which the wheels are rotatably mounted, adjustable connections uniting the axle with the said rotatable steering member, and hand controlled power actuated connections leading forwardly from the transmission case and engaging the rotatable steering member to control and actuate the latter.

2. A tractor including forward steering wheels and rear traction wheels, a horizontally disposed frame, a motor in the frame, a transmission case, a front axle upon the opposite ends of which the steering wheels are rotatably supported, a power actuated rotatable member in the forward portion of the frame to which the front axle is adjustably clamped, oppositely rotatable connections leading to said rotatable steering member, and manual means for controlling the direction of rotation of the said steering connections.

3. A tractor including a frame, forward steering wheels and rear traction wheels at opposite sides of the frame, a rotatably adjustable front axle having down-turned opposite ends to which the steering wheels are connected, a motor in the frame, a transmission case at the rear of the motor, a horizontal rotatable steering member in the forward portion of the frame to which the front axle is connected, and manually controlled power connections for rotating said member in relatively opposite directions.

4. A tractor including a frame, forward steering wheels and rear traction wheels at opposite sides of the frame, a rotatably adjustable front axle having down-turned opposite ends to which the steering wheels are connected, a motor in the frame, a transmission case at the rear of the motor, a horizontal rotatable steering member in the forward portion of the frame, a ring rotatable with said member and with which the front axle has a tiltable connection, and manually controlled power actuated connections for rotating said member in relatively opposite directions.

5. A tractor having a rigid supporting member at its forward portion provided with a depending hub, a rotatable steering member journaled on the said hub and having lugs depending therebelow, a ring, a pin extending diametrically through the ring and through the said lugs, a steering axle having a rotatably adjustable connection with the said ring at right angles to the said pin, steering wheels at opposite ends of the axle, and connections for rotating the said steering member.

6. In a tractor, forward steering wheels, an axle having downturned ends upon which the wheels are adjustably mounted, a member to which the axle is clamped and with respect to which the axle is rotatably and longitudinally adjustable, a rotatable steering member with which said first named member is rotatable and with respect to which said first named member has a pivoted tiltable connection in a plane at right angles to the axle, and means for rotating said steering member in relatively opposite directions.

7. In a tractor, a forward horizontally disposed steering member rotatable on a vertical axis and having spaced depending lugs, a ring having a diametrical pin extending through said lugs and having diametrical lugs projecting outwardly therefrom in a plane at right angles to the pin, a polygonal steering axle adjustably clamped to the said lugs of the ring and having angular outer end portions, and rotatable steering wheels having adjustably clamped connections upon the angular outer ends of the axle as and for the purpose described.

8. A tractor having a rigid supporting member at its forward portion provided with a depending hub, a rotatable steering member journaled on said hub and having lugs depending therefrom at diametrically opposite points, a ring around the lugs having diametrically projecting lugs at right angles to the lugs of the steering member, a pin projecting diametrically through the ring and through the lugs of the steering member, an axle, clamps securing the axle in rotatable and lengthwise adjustable relation to the lugs of the ring, steering wheels at opposite ends of the axle, and connections for rotating the said steering member.

9. A tractor having a forward horizontally disposed steering member rotatable on a vertical axis and provided with depending diametrically opposed lugs, a ring having dia-

metrically opposed outstanding lugs at right angles to the lugs of the steering member, a pin extending diametrically through the ring and through the lugs of the steering member, a polygonal steering axle, two-part clamping members having inner polygonal faces engaging the axle and having outer toothed surfaces, said ring lugs having lower concaved and toothed surfaces coacting with the external toothed surfaces of the clamping members, U-bolts extending through the ring lugs and engaging the said clamping members of the axle, said axle having outer angular end portions, and steering wheels rotatable on the angular outer ends of the axle.

OTTO LEROY LEWIS.