Sept. 23, 1952 C. H. PAUL ET AL 2,611,161

PATTERN FIXTURE FOR MAKING MOLDS FOR TURBINES

Filed March 17, 1949 3 Sheets-Sheet 1

Fig. 1

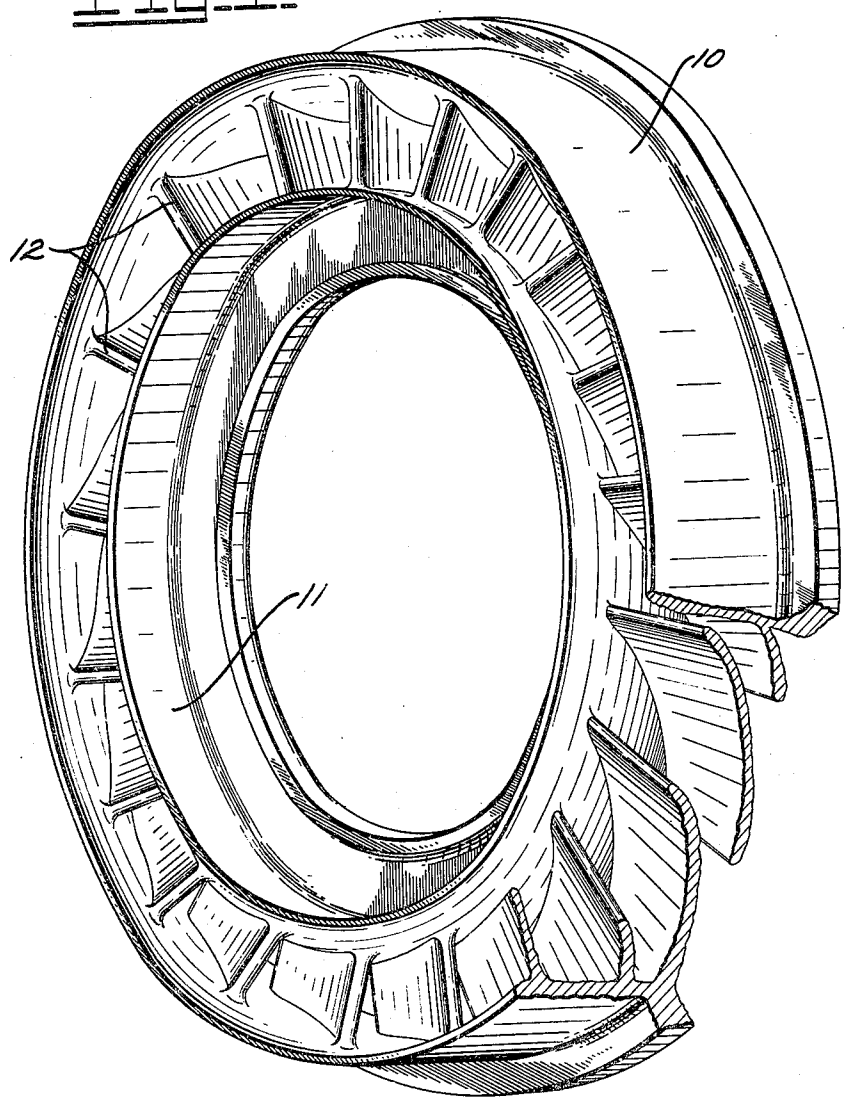

INVENTORS.
Carl H. Paul
BY Bernard F. Vogelaar
Charles M. Fryer
ATTORNEY

Sept. 23, 1952 C. H. PAUL ET AL 2,611,161

PATTERN FIXTURE FOR MAKING MOLDS FOR TURBINES

Filed March 17, 1949 3 Sheets-Sheet 2

Fig. 2.

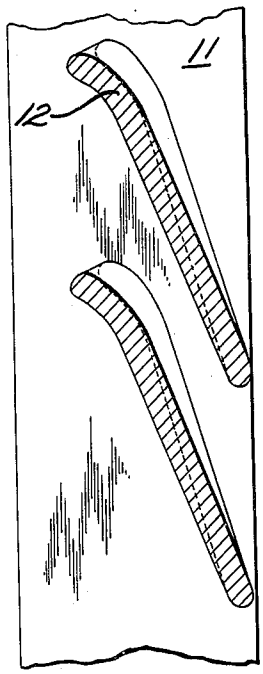

Fig. 3.

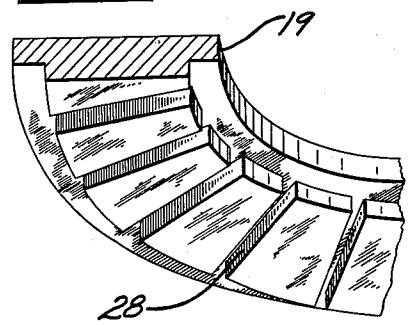

Fig. 4.

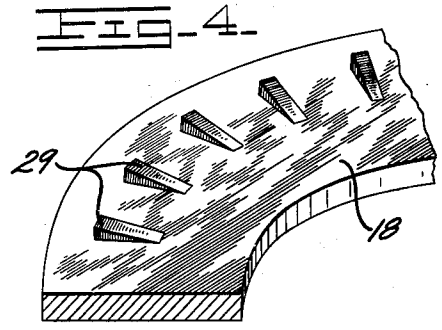

Fig. 5.

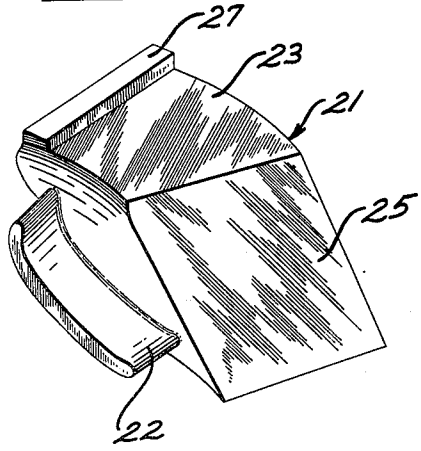

Fig. 6.

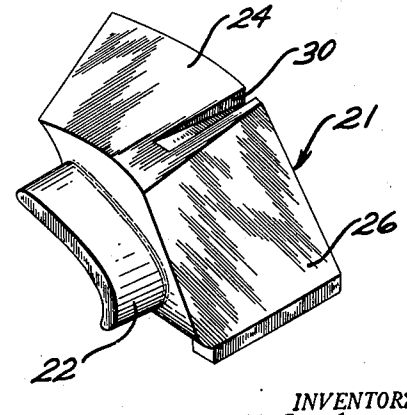

INVENTORS.
Carl H. Paul
BY Bernard F. Vogelaar
Charles M. Fryer
ATTORNEY.

Sept. 23, 1952 C. H. PAUL ET AL 2,611,161

PATTERN FIXTURE FOR MAKING MOLDS FOR TURBINES

Filed March 17, 1949 3 Sheets-Sheet 3

Fig. 7.

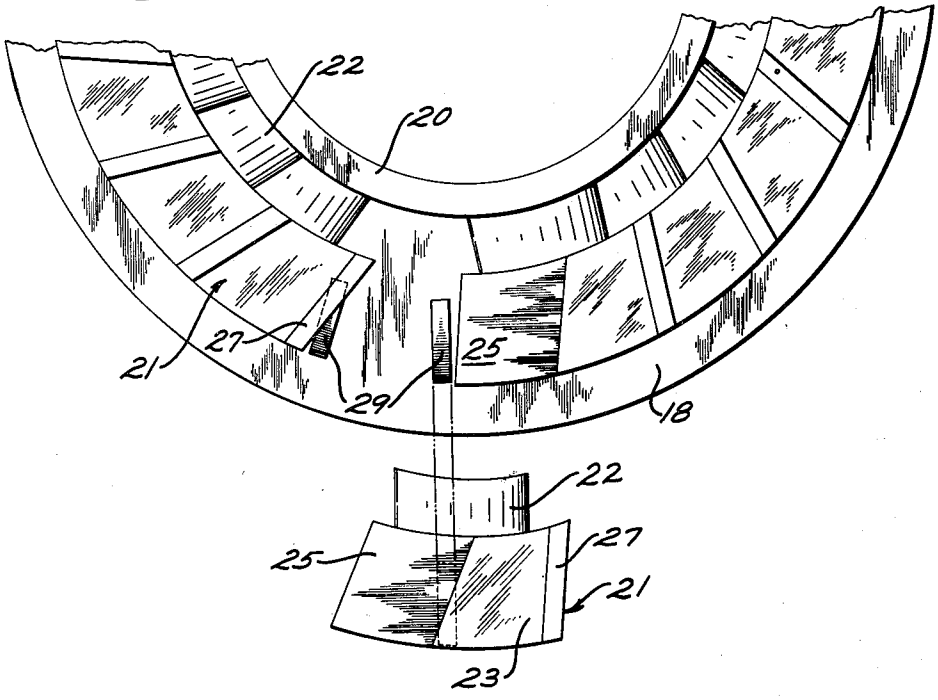

Fig. 8.

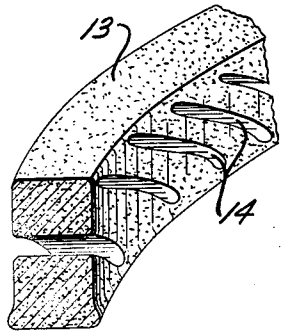

Fig. 9.

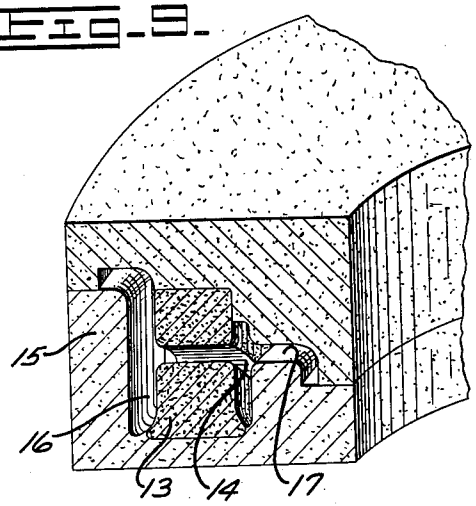

INVENTORS.
Carl H. Paul
BY Bernard F. Vogelaar
Charles M. Fryer
ATTORNEY.

Patented Sept. 23, 1952 2,611,161

UNITED STATES PATENT OFFICE

2,611,161

PATTERN FIXTURE FOR MAKING MOLDS FOR TURBINES

Carl H. Paul, Peoria Heights, and Bernard F. Vogelaar, East Peoria, Ill., assignors to Caterpillar Tractor Co., Peoria, Ill., a corporation of California

Application March 17, 1949, Serial No. 81,868

2 Claims. (Cl. 22—53)

1

This invention relates to a casting and fixtures for making complex molds or mold cores such as are required in the casting of certain forms with irregular or oddly positioned parts.

In a nozzle ring of the type commonly employed in a gas turbine or the like for directing the expanding gases toward a turbine wheel, it is desirable to employ blades having a twisted form to obtain high efficiency. This twisted blade form is essentially the same as would be achieved by twisting the outer-most end of the blade relative to its inner edge. In the past it has not been possible to cast a nozzle ring having twisted blades in a single integral piece due to the difficulty of forming a suitable mold and particularly to the difficulty of extracting the twisted blade patterns from the core portion of the mold. As a result, it has been conventional practice to fabricate the blades and retainer rings separately and then join them together as by welding or other methods.

It is, therefore, an object of the present invention to provide means to enable the casting of a nozzle ring having twisted blades as a single integral unit. It is a further object of this invention to provide a fixture for use in making molds or cores that will enable the extraction of pattern parts of unusual shape and arrangement.

Further objects and advantages of this invention will be made apparent in the following specification wherein reference is made to the accompanying drawings.

In the drawings:

Fig. 1 is an isometric view of a nozzle ring typifying a casting that is made possible by the present invention;

Fig. 2 is a fragmentary sectional view illustrating the shape of the nozzle blades;

Fig. 3 is a fragmentary sectional view of a cover plate forming a part of the molding fixture;

Fig. 4 is a fragmentary sectional view of a base plate forming a part of the molding fixture;

Fig. 5 is an isometric view of one of the blade patterns;

Fig. 6 is an isometric view of the same blade pattern inverted;

Fig. 7 is a plan view of the assembled pattern fixture with the cover plate removed and two of the blade patterns withdrawn;

Fig. 8 is an isometric view of a part of the sand core containing the blade voids; and

Fig. 9 is a similar view of a finished mold with the blade core in place.

Fig. 1 illustrates a nozzle ring comprising a pair of concentric annular members 10 and 11 and a

2

plurality of spaced blades 12 interposed between and cast integrally therewith. The blades 12 are provided for the purpose of directing the expanding gases toward a turbine wheel (not shown) in a conventional manner. To increase the efficiency of the nozzle ring, it is conventional practice to employ blades having a twisted form. As is best illustrated in Fig. 2, the shape of each of the blades is essentially the same as would be achieved by twisting the outer leading edge of the blade about the trailing edge while holding the inner edge adjacent the annular member 11 fixed. In the past the problem of removing a pattern of a blade having such a shape from a sand mold has prevented the manufacture of a nozzle ring having twisted blades by casting in a single integral part. It is the purpose of this invention to provide a combination of pattern equipment which permits the formation of a sand core such as is illustrated at 13 in Fig. 8 having voids 14 therein corresponding exactly to the configuration of the nozzle ring blades 12. The core 13 is then placed in a suitable mold illustrated at 15 in Fig. 9 which is provided with voids 16 and 17 corresponding to annular members 10 and 11 respectively. The nozzle ring is then cast in a conventional manner by filling the voids with molten material.

As illustrated in Figs. 3 to 7, the pattern equipment comprises an annular base plate 18, a cover plate 19, an inner sleeve 20, and a plurality of arcuate blocks 21, each of which carries a blade pattern 22 extending therefrom. Each of the blocks is provided with top and bottom faces 23 and 24, respectively, and oblique side faces 25 and 26. The top face 23 is provided with a locating rib 27 adapted to be received in one of a plurality of equally spaced slots 28 provided on the cover 19. The base plate 18 is provided with a plurality of spaced inclined guide members 29, each of which is adapted for reception by a guide recess 30 provided in the bottom face of each of the blocks 21. The blocks are adapted to be assembled on the base plate forming an annulus as illustrated in Fig. 7 with the blade patterns 22 projecting inwardly and abutting the inner sleeve 20. In this position, the blade patterns occupy positions relative to each other, corresponding exactly to that of the nozzle blades 12 in the finished nozzle ring illustrated in Fig. 1.

After the blade patterns are assembled, core sand is packed about them to form the sand core illustrated at 13 in Fig. 8. Ordinarily the formation of such a core or mold is considered impossible because of the fact that the irregularly

shaped blade patterns cannot be withdrawn without disturbing the sand mold. Such withdrawal or extraction of the blade patterns is made possible by the construction shown through the location and shape of the guide members **29**, recesses **30** and configuration of the blocks **21**. The inclination of the guide members **29** and recesses **30** causes lifting of one edge of the block **21** as it is withdrawn in a slightly off radial direction as illustrated in Fig. 7. This in effect twists the block through a path corresponding to the twist of the blade pattern. The inclination of the abutting faces of the blocks is designed to provide clearance for this twisting motion as they are withdrawn. The voids **14** are therefore preferably formed by sliding each of the blocks **21** outwardly away from the sleeve **20**. The twisting motion of the blocks and blade patterns is such that, during removal, any point at any cross section of the blade pattern will pass through corresponding points at any other cross sections thus permitting their removal without disturbing the surrounding core.

We claim:

1. A pattern fixture for producing a mold of a plurality of radially arranged blade like members of twisted formation which comprises, a base member, a plurality of blocks arranged to be supported as an annulus on said base and each supporting an inwardly projecting blade pattern, and separate wedge-shaped guide means arranged between the base and each block to compel the blocks upon being withdrawn in a generally radial direction from the annulus to follow a path which twists in conformity with the twist of the blade.

2. A pattern fixture for forming a mold of radially arranged twisted blades which comprises, a base, a plurality of blocks adapted to be supported as an annulus on said base and each supporting an inwardly projecting blade pattern, an annular wall adjacent the inner ends of said blade patterns, a cover adapted to overlie the blocks and said wall, each of said blocks having a recess in its base surface adjacent one of its edges, and a wedge on the base projecting into said recess to guide withdrawal of the block in a slightly off radial direction and raise said adjacent edge progressively during withdrawal to cause the blade pattern to follow the twisted path defined by its own configuration.

CARL H. PAUL.
BERNARD F. VOGELAAR.

REFERENCES CITED

The following references are of record in the file of this patent:

UNITED STATES PATENTS

Number	Name	Date
873,684	Rice	Dec. 10, 1907
914,474	Barnes	Mar. 9, 1909
1,226,604	Sherwood et al.	May 15, 1917
1,378,524	Clark	May 17, 1921
1,537,176	Losel	May 12, 1925
1,641,665	Devaud	Sept. 6, 1927
2,301,140	Pfeiffer	Nov. 3, 1942
2,510,735	Bodger	June 6, 1950