(No Model.)

2 Sheets—Sheet 1.

C. H. BAYLEY.

VAMP MARKING MACHINE.

No. 456,542. Patented July 28, 1891.

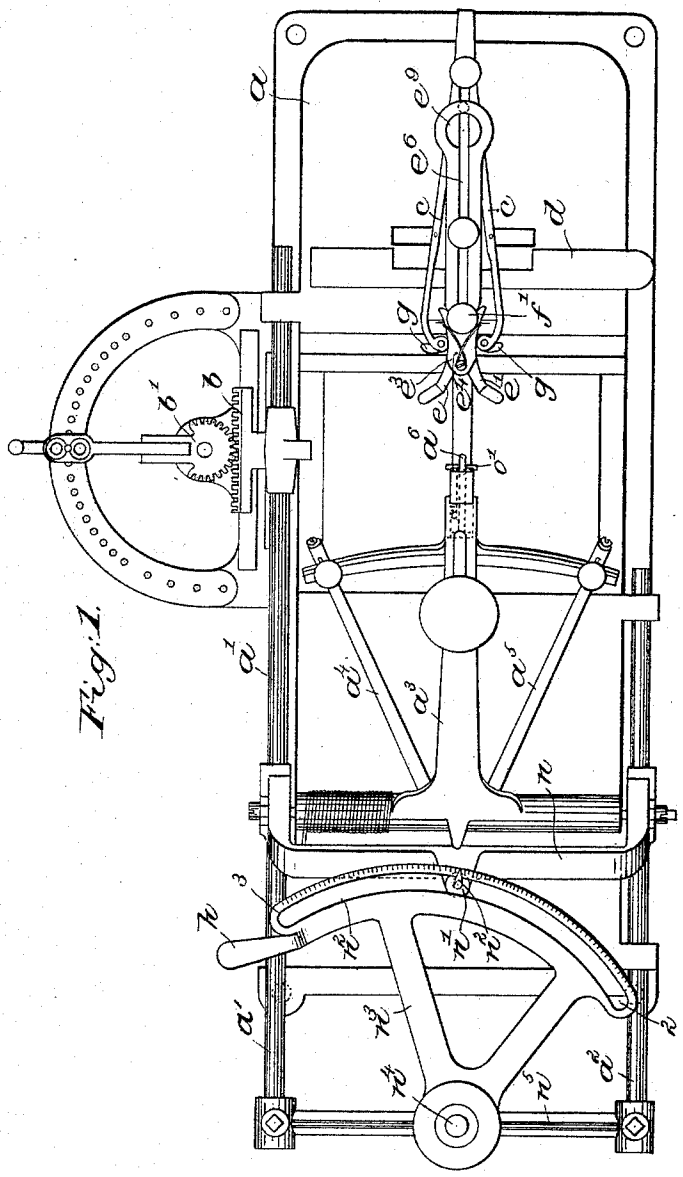

Fig. 1.

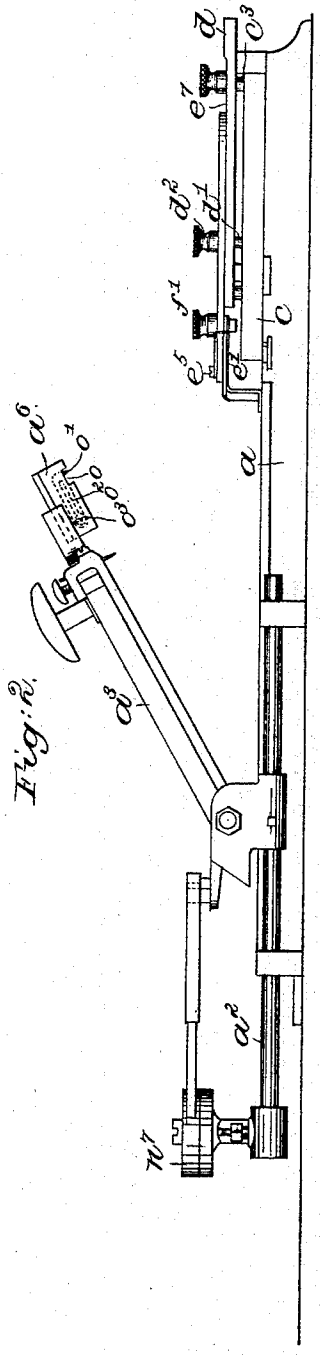

Fig. 2.

Witnesses.
Edward F. Allen.
Fred'k S. Greenleaf.

Inventor.
Charles H. Bayley
by Lemby & Gregory
Attys.

THE NORRIS PETERS CO., PHOTO-LITHO., WASHINGTON, D. C.

(No Model.) 2 Sheets—Sheet 2.

C. H. BAYLEY.

VAMP MARKING MACHINE.

No. 456,542. Patented July 28, 1891.

Fig. 3.

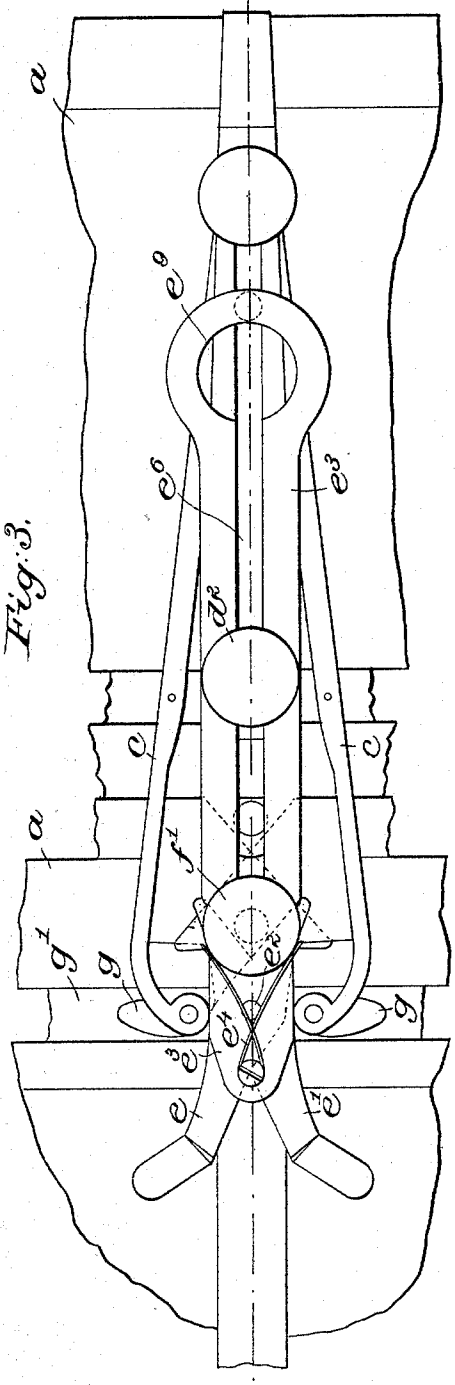

Fig. 4.

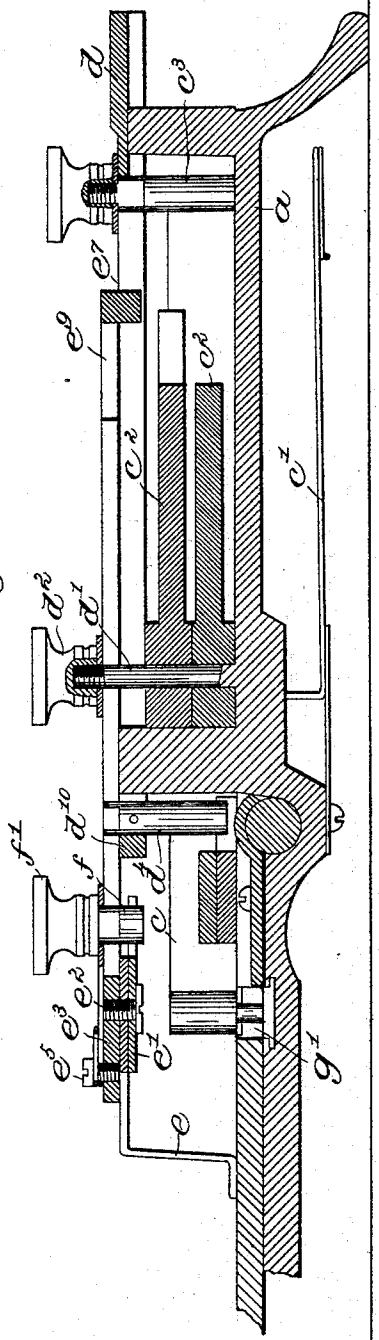

Witnesses.
Edward F. Allen
Fred S. Greenleaf.

Inventor.
Charles H. Bayley
by Crosby & Gregory Attys.

THE NORRIS PETERS CO., PHOTO-LITHO., WASHINGTON, D. C.

UNITED STATES PATENT OFFICE.

CHARLES H. BAYLEY, OF BOSTON, MASSACHUSETTS.

VAMP-MARKING MACHINE.

SPECIFICATION forming part of Letters Patent No. 456,542, dated July 28, 1891.

Application filed April 24, 1891. Serial No. 390,229. (No model.)

To all whom it may concern:

Be it known that I, CHARLES H. BAYLEY, of Boston, county of Suffolk, State of Massachusetts, have invented an Improvement in Vamp-Marking Machines, of which the following description, in connection with the accompanying drawings, is a specification, like letters on the drawings representing like parts.

This invention has for its object to improve the construction of the vamp-marking machine represented in United States Patent No. 429,389, dated June 3, 1890, granted to John F. Rogers.

Vamps now in common use, especially in connection with women's shoes, are cut low or deep in the throat or toward the toe, leaving but little material between the throat or front end of the quarter and the toe-tip. The depth of this throat varies very materially, according to the pattern or style of shoe, and I have found it necessary to provide means for quickly adjusting the machine for marking these differently-cut vamps. As the machine has been constructed, rests were provided for the shank ends of such vamps, as are commonly called "short vamps," they comprising merely the toe and shank portions. As it is preferable that the rest should remain stationary or in fixed position, it becomes necessary to provide suitable vamp-guides that may be adjusted to each different style or cut of vamp to be marked. I have therefore provided vamp-guides, preferably detachable, which are adapted for such vamps as have a low-cut or deep throat, and I have also provided suitable means for holding said vamp-guides in position and for adjusting them. As the machine has been constructed, the vamp-guides lie flush with the supporting-bed, and it frequently happens that in placing vamps in position over or around the vamp-guides the edges will slide beneath the said guides, and as such fact frequently escapes the notice of the operator, the vamp is incorrectly marked. To obviate this difficulty I have provided such vamp-guides with suitable means by which the aforesaid objection is overcome. Many different styles of toe-tips are used in connection with like vamps, and I have therefore provided means for quickly adjusting the markers for such different styles of toe-tips, which adjustment is independent of the adjustment for the different sizes or styles of vamps. There are many shoes manufactured in which the quarter overlaps the vamp, and I have provided a suitable marker for marking the depth of such overlap, such marker being arranged to operate simultaneously with the other markers which mark the center of the vamp and the points for the toe-tip.

Figure 1 shows in plan view a vamp-marking apparatus embodying this invention; Fig. 2, a side elevation of the machine shown in Fig. 1; Fig. 3, an enlarged detail of the vamp-guides forming a part of this invention, and Fig. 4 a longitudinal section of the parts shown in Fig. 3.

The supporting-bed a, having on it a sliding carriage composed of the slide-rod a', the marker holder or carrier a^3, pivoted to a suitable support on said slide-rod, levers a^4 a^5, and the center marker a^6, borne by said holder or carrier, the rack b, secured to said slide-rod a', the sector b', engaging and moving it, and means for moving said sector, and a graduated scale therefor, the vamp-guides c c, and spring c' for drawing said guides toward the center or to a fixed point, pivoted arms c^2 c^2, located between said guides c c, and the movable stud c^3 for separating said arms to thereby separate the guides at their heel ends, and means for separating said guides c c at their opposite or front ends, the rest d for the ends of the shank portions of the vamp, movable into and out of operative position, are as constructed in the patent.

The detachable vamp-guide, herein shown as forming a part of this invention, consists of two oppositely-formed guide-arms e e', pivoted at e^2 to a stud screwed into or fixed to a plate or bar e^3, a suitable spring e^4, attached to a stud e^5, engaging the said guide-arms e e', as best shown in Fig. 3, and operating to draw the outer or front ends toward each other. The plate or bar e^3 has a slot or passage e^6 nearly its entire length, and is placed on the slotted plate or bar d^{10}. The fixed pin d', rising from the supporting-bed a, passes through said slot or passage, and the outer end of said fixed pin or stud is screw-threaded to receive upon it a nut d^2, by means of which the said plate or bar e^3 is held in

place. The plate or bar e^3 has formed upon its under side a lug e^7, which enters the slot in the plate or bar d^{10}, and the pin d^4, fixed to or carried by said plate or bar d^{10}, is extended upwardly to enter the slot or passage in the plate or bar e^3, said pin d^4 and the lug e^7 serving as guides to cause the plate or bar e^3 to be moved in a direct line. The stud f, having a screw-threaded end portion, occupies a position in the slot or passage e^6 in the plate or bar e^3, and a nut f' is turned on said screw-threaded portion. By loosening said nut f' the said stud may be moved toward and from the pivot of the guide-arms e e', and, working against said arms, moves them on their pivot, separating them as said stud is pushed forward, the spring e^4 yielding as said arms separate.

When it is not desired to use this detachable device, it may be removed by simply loosening the nut d^2, moving the device forward until the enlarged portion e^9 of the plate or bar e^3 registers with said nut, at which point the plate or bar e^3 may be removed, the nut passing through said enlarged portion.

When using said detachable arms in connection with a short vamp, the rest d is brought into operative position, the vamp placed on the supporting-bed with the ends of the shank portions bearing against said rest, the nut d^2 is loosened, and the plate or bar e^3 moved forward until the guiding-arms e e' reach the forward end of the throat, when said nut is tightened. The nut f' is then loosened and the stud f moved in one or the other direction to thus separate the guiding-arms e e' or to allow them to be brought nearer together by means of the actuating-spring. When the vamp is thus positioned, the markers may be operated.

The usual vamp-guides c c are not used when the detachable guide-arms are employed. The usual vamp-guides c c are provided, as herein shown, with projections or outwardly-extended lips g g, which pass down below the surface of the supporting-bed in the usual slot or passage g', and said projections or outwardly-extended lips prevent the edges of the vamp from passing beneath the said guides.

As a support for the pivoted marker holder or carrier I have employed a yoke n, provided with a stud n', which passes up through a cam-slot n^2, formed in a plate or lever n^3, pivoted at n^4 to the rod or bar n^5, which connects the parallel slide-rods a' a^2. The cam-slot n^2 is represented as a continuous curve, the radius of which gradually increases from the point 2 to the point 3, and the lever is provided with a hand-piece or equivalent h, by which it may be moved. As this lever is moved on its pivot it will be seen that by means of the cam-slot n^2 of varying radius the marker holder or carrier will be moved backward or forward on, but independent of, the slide-rods a' a^2. This means of adjustment for the marker holder or carrier materially increases the efficiency of the machine. One side of the cam-slot will preferably be graduated, as shown in Fig. 1, and a pointer or index n^{20} will be secured to the stud n', as shown.

As represented in Fig. 1, a spring-acting washer n^7 is placed on the pivot of the lever n^3 to assist in holding it in any desired position.

Near the outer end of the center marker a^6 a notch o is formed, which receives the cross-marker o', provided with a slotted ear o^2, (see dotted line, Fig. 2,) through which a set-screw o^3 passes, entering the marker a^6, such cross-marker serving to indent or mark the vamp at a point which determines the line of the overlap, and by means of the slotted ear and by making the notch o of sufficient length the said overlap or cross-marker may be adjusted at will.

I claim—

1. In a vamp-marking machine, a supporting-bed and vamp-markers movable toward and from it, the vamp-guides c c, and means for moving them, combined with the projections or outwardly-extended lips g g thereon, substantially as and for the purposes set forth.

2. In a vamp-marking machine, a supporting-bed and vamp-markers movable toward and from it, combined with a detachable vamp-guide composed of two pivoted guide-arms e e', controlled by a spring, a single supporting-plate e^3, to which they are pivoted, and means for adjusting said plate toward and from the vamp-markers, substantially as described.

3. In a vamp-marking machine, a supporting-bed and vamp-markers movable toward and from it, combined with a detachable vamp-guide composed of two pivoted guide-arms e e', controlled by a spring, a single supporting-plate e^3, to which they are pivoted, and means for adjusting said guide-arms in the arc of a circle independently of the plate, substantially as described.

4. In a vamp-marking machine, a supporting-bed and vamp-markers movable toward and from it, combined with a detachable vamp-guide composed of two pivoted guide-arms e e', controlled by a spring, a single longitudinally-movable supporting-plate e^3, to which they are pivoted, and means for moving said pivoted guide-arms toward and from each other, substantially as described.

5. In a vamp-marking machine, a supporting-bed and vamp-markers movable toward and from it, a holder or carrier for the vamp-markers, parallel rods at opposite sides of said holder or carrier on which it is free to slide, and a hand-operated lever for moving said holder or carrier on the said parallel rods, substantially as described.

6. In a vamp-marking machine, a supporting-bed and vamp-markers movable toward and from it, a holder or carrier for said vamp-markers, a carriage for said holder or carrier composed of two parallel slide-rods, and

a rod or bar connecting said two parallel slide-rods, and bearings at each side of the supporting-bed in which said slide-rods move, substantially as described.

7. In a vamp-marking machine, a supporting-bed and vamp-markers movable toward and from it, a holder or carrier for said vamp-markers, a carriage for said holder or carrier, and means for moving it, combined with a hand-operated lever for moving said holder or carrier on its carriage independently, substantially as described.

8. In a vamp-marking machine, a supporting-bed and vamp-markers movable toward and from it, a holder or carrier for said vamp-markers, a carriage for said holder or carrier, and means for moving it, combined with a pivoted lever having a cam-slot of varying radius for engaging the said holder or carrier, substantially as described.

9. In a vamp-marking machine, a supporting-bed and vamp-markers movable toward and from it and comprising a center marker and an overlap-marker *o'*, arranged in and carried by the center marker and at right angles with relation to the center marker, substantially as described.

10. In a vamp-marking machine, a supporting-bed and vamp-markers movable toward and from it and comprising a center marker and an adjustable overlap-marker *o'*, arranged in and carried by the center marker and at right angles with relation to the center marker, substantially as described.

In testimony whereof I have signed my name to this specification in the presence of two subscribing witnesses.

CHARLES H. BAYLEY.

Witnesses:
GEO. W. GREGORY,
EDWARD F. ALLEN.