US 20080212725A1

(19) **United States**

(12) **Patent Application Publication**

(10) **Pub. No.: US 2008/0212725 A1**

(43) **Pub. Date: Sep. 4, 2008**

Tang

(54) **DIGITAL PREDISTORTION FOR COGNITIVE RADIO**

(76) Inventor: **Haiyun Tang**, Saratoga, CA (US)

Correspondence Address:
WEST & ASSOCIATES, A PC
2815 MITCHELL DRIVE, SUITE 209
WALNUT CREEK, CA 94598 (US)

(21) Appl. No.: **12/034,653**

(22) Filed: **Feb. 20, 2008**

Related U.S. Application Data

(60) Provisional application No. 60/890,801, filed on Feb. 20, 2007.

Publication Classification

(51) **Int. Cl.**
H04B 1/10 (2006.01)

(52) **U.S. Cl.** **375/346**

(57) **ABSTRACT**

Embodiments of cognitive radio technology can recover and utilize under-utilized portions of statically-allocated radio-frequency spectrum. A plurality of sensing methods can be employed. Transmission power control can be responsive to adjacent channel measurements. Digital pre-distortion techniques can enhance performance. Embodiments of a high DNR transceiver architecture can be employed.

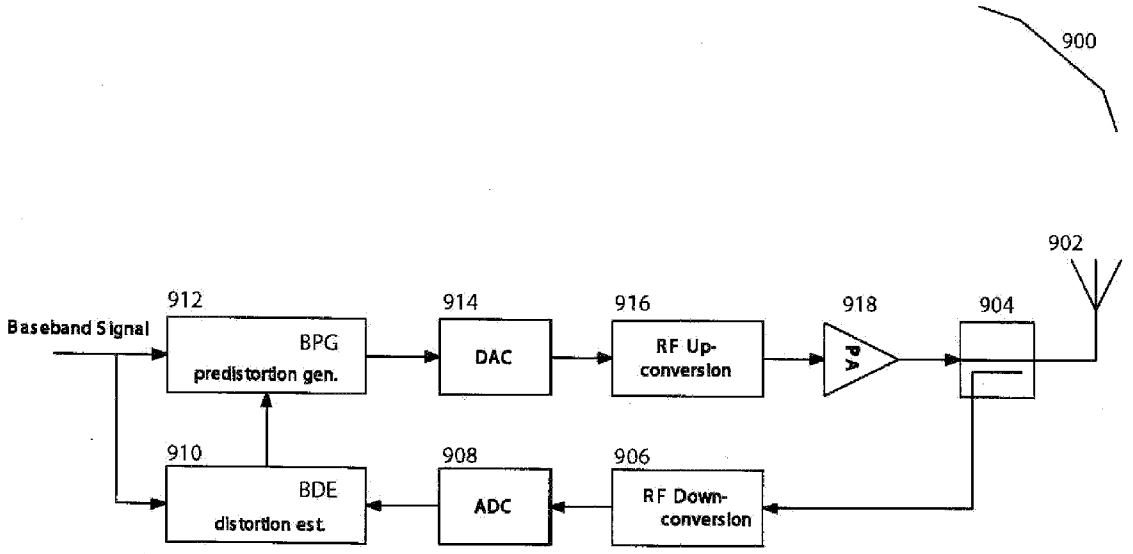

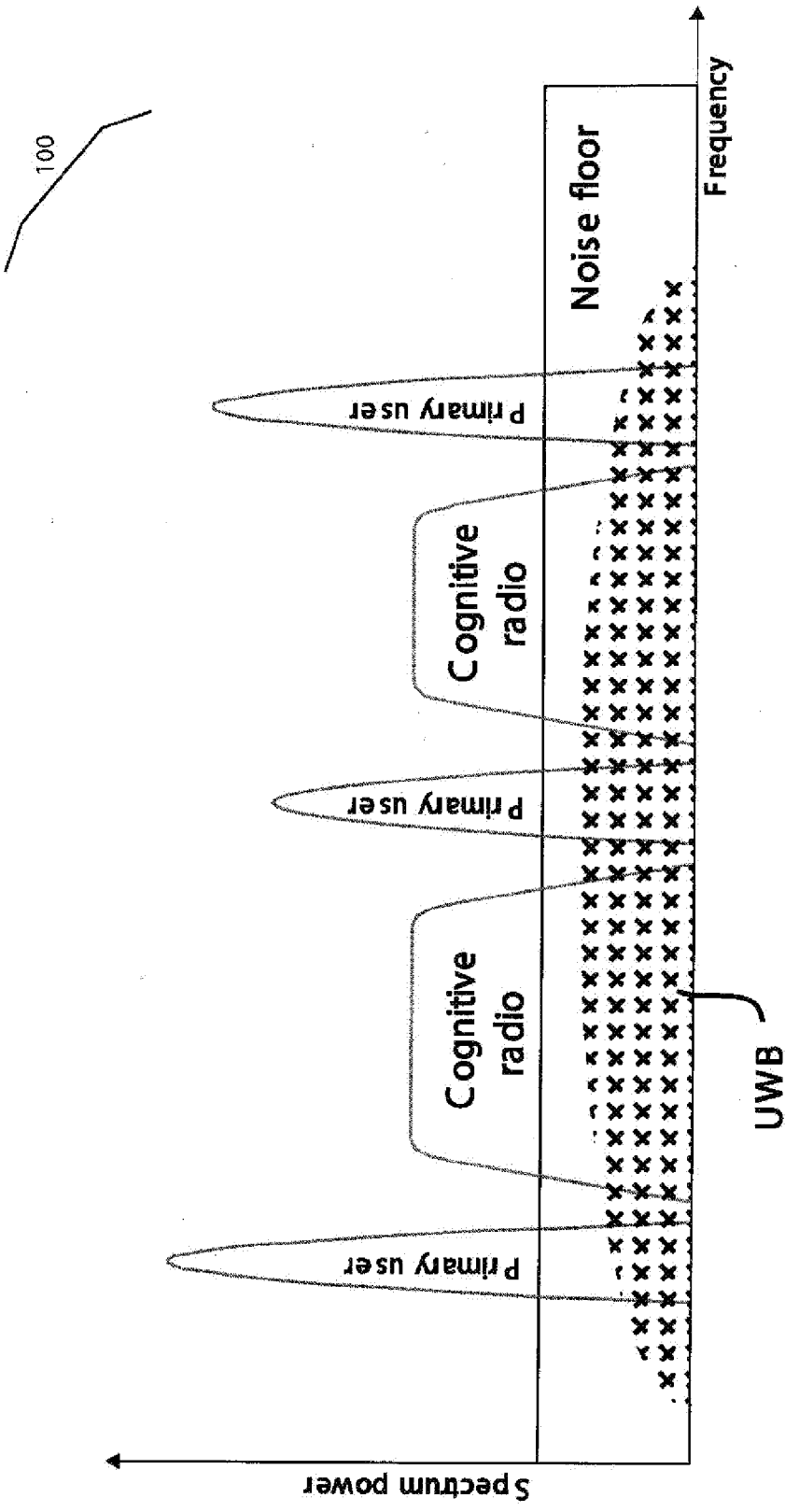
100
Frequency
Noise floor
Primary user
Cognitive radio
Primary user
Cognitive radio
Primary user
UWB
Spectrum power

FIG 1

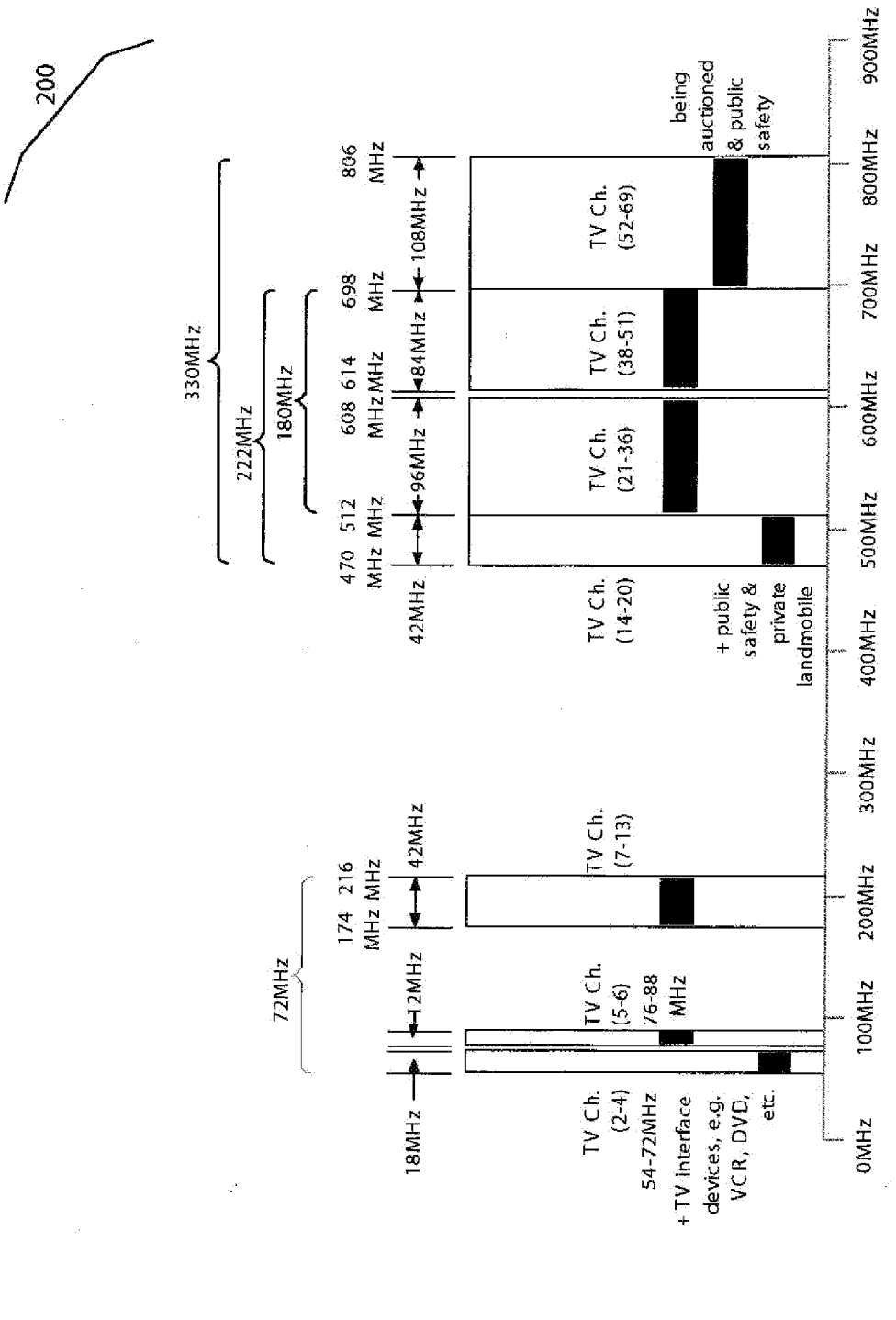
200
330MHz
222MHz
180MHz
72MHz
18MHz
12MHz
42MHz
42MHz
96MHz
84MHz
108MHz
174 MHz
216 MHz
470 MHz
512 MHz
608 MHz
614 MHz
698 MHz
806 MHz
TV Ch. (2-4) 54-72MHz + TV interface devices, e.g. VCR, DVD, etc.
TV Ch. (5-6) 76-88 MHz
TV Ch. (7-13)
TV Ch. (14-20)
+ public safety & private landmobile
TV Ch. (21-36)
TV Ch. (38-51)
TV Ch. (52-69)
being auctioned & public safety
0MHz
100MHz
200MHz
300MHz
400MHz
500MHz
600MHz
700MHz
800MHz
900MHz

FIG 2

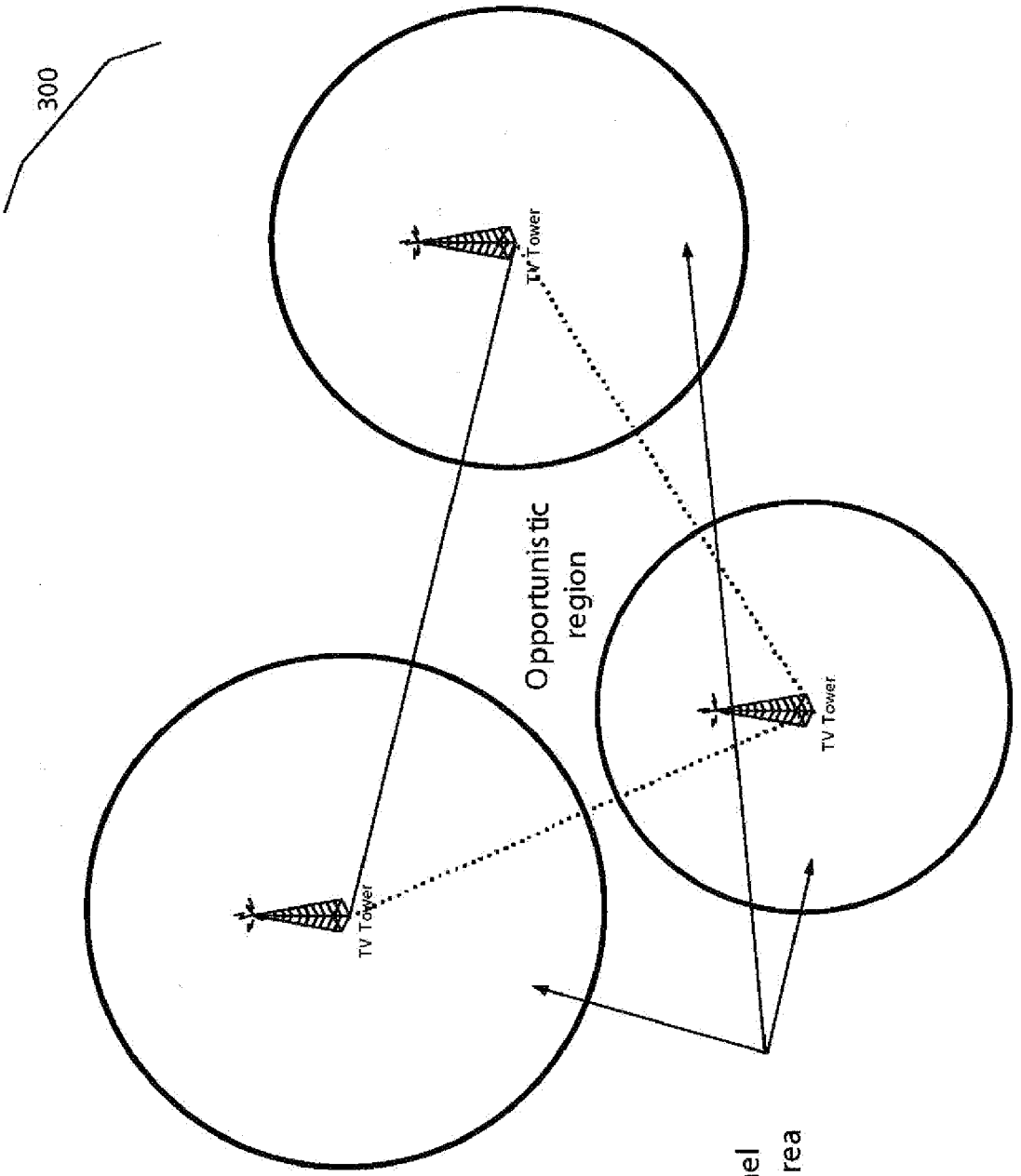
300
TV Tower
TV Tower
TV Tower
Opportunistic region
Co-channel coverage area

FIG 3

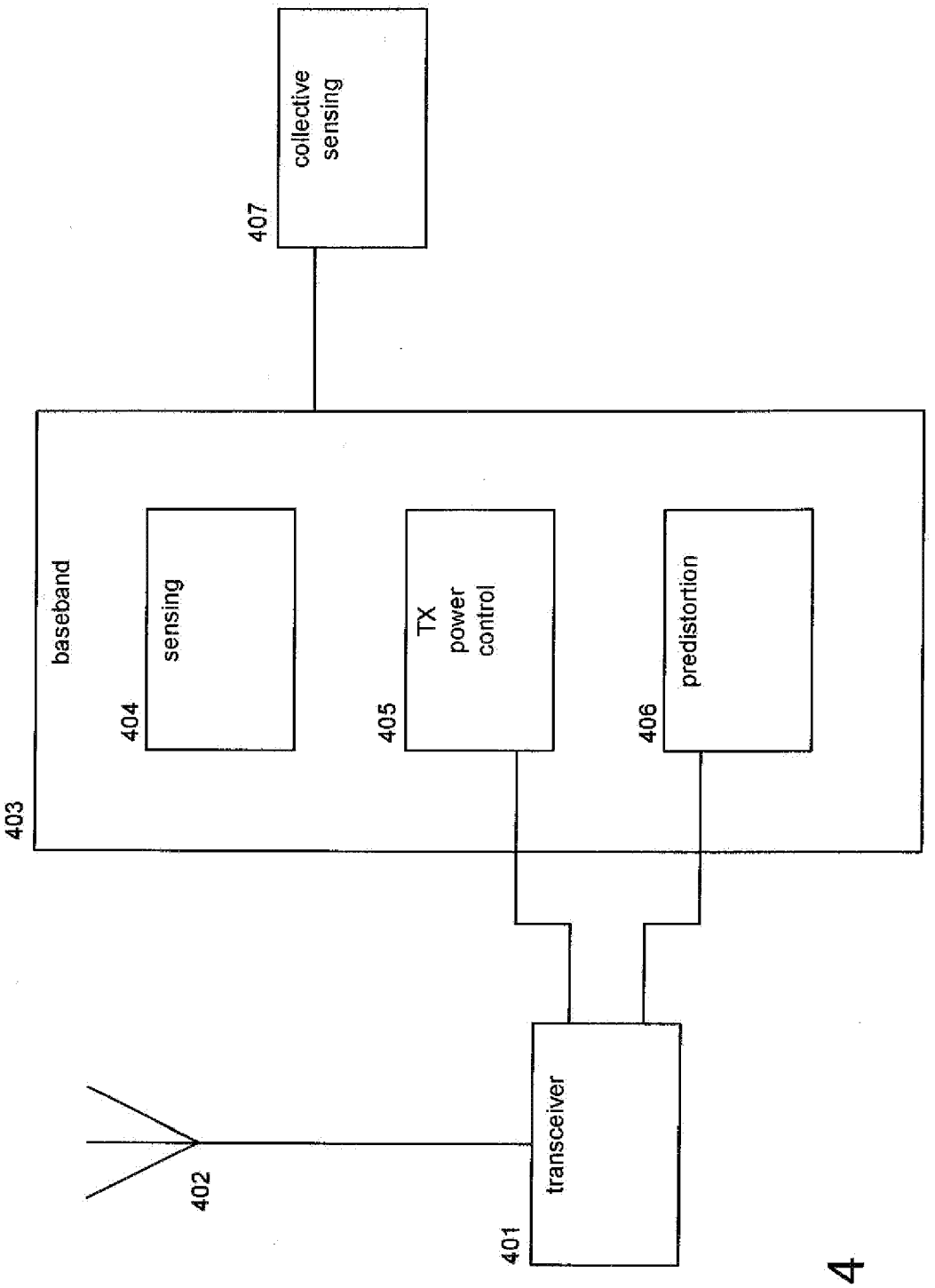
collective sensing
407
baseband
sensing
404
TX power control
405
predistortion
406
403
transceiver
401
402

FIG 4

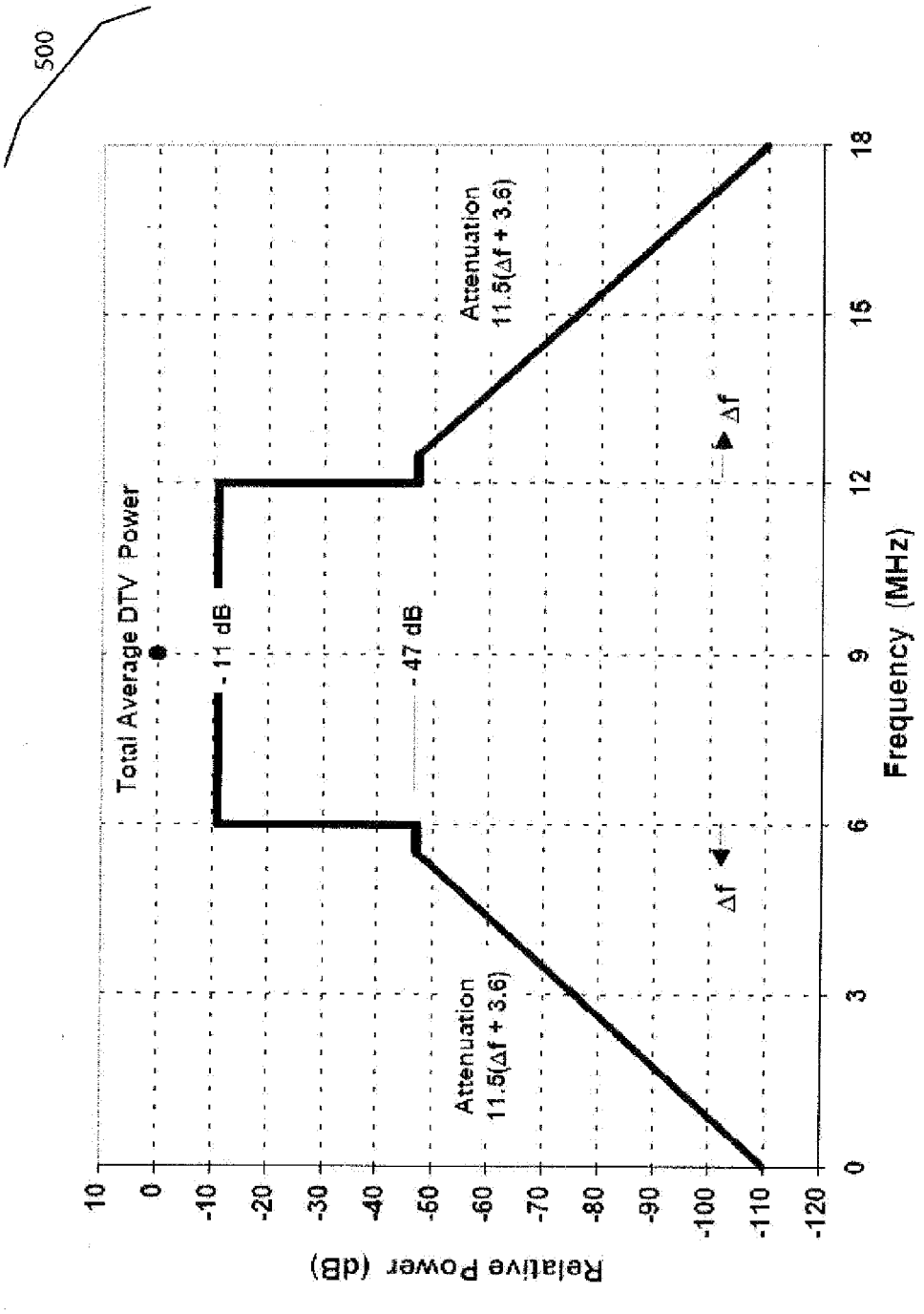
500
Total Average DTV Power
- 11 dB
- 47 dB
Attenuation
11.5(Δf + 3.6)
Attenuation
11.5(Δf + 3.6)
Δf
Δf
Relative Power (dB)
Frequency (MHz)
10
0
-10
-20
-30
-40
-50
-60
-70
-80
-90
-100
-110
-120
0
3
6
9
12
15
18

FIG 5

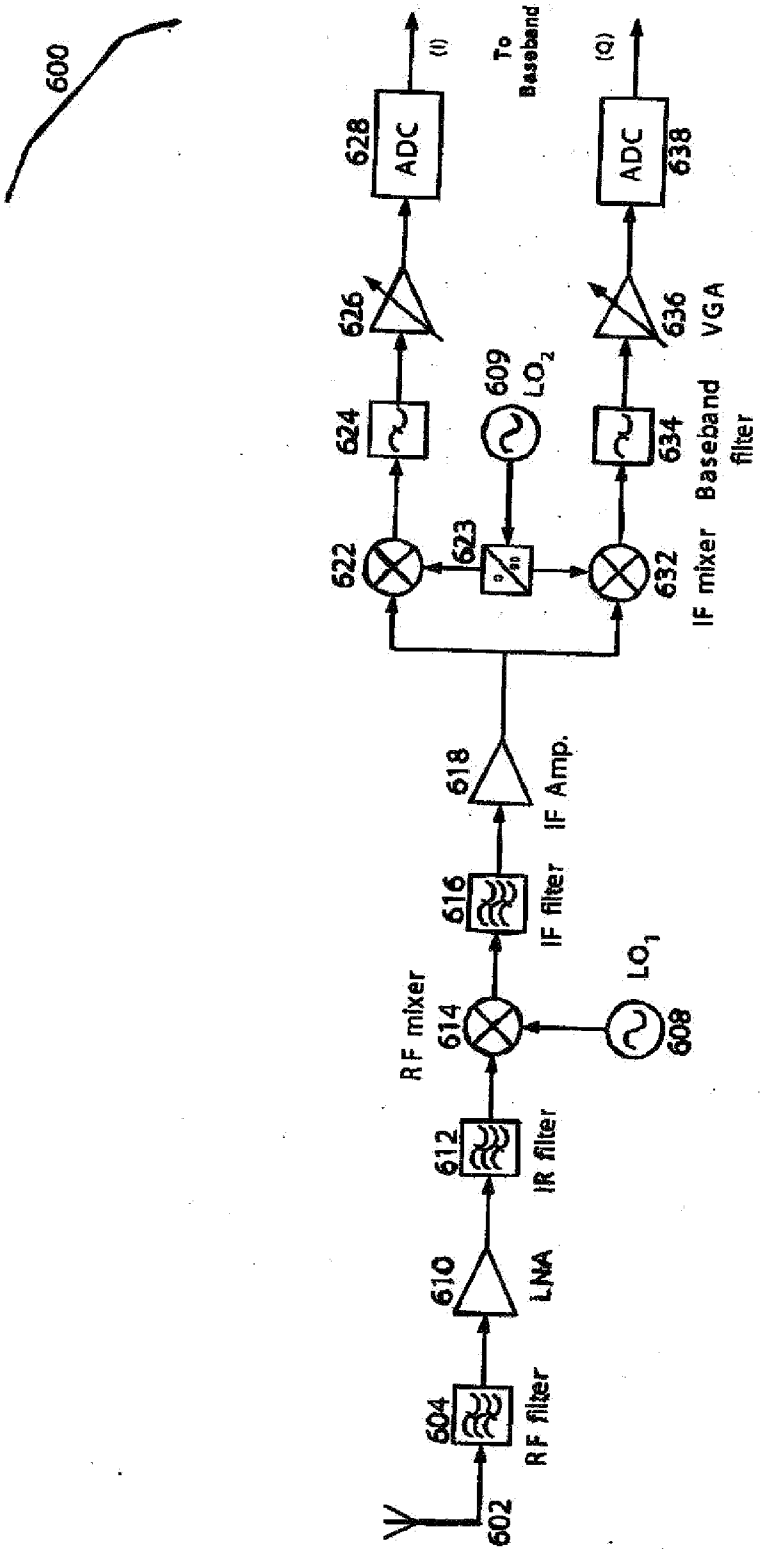
600
602
604
RF filter
610
LNA
612
IR filter
614
RF mixer
608
LO_1
616
IF filter
618
IF Amp.
622
623
632
IF mixer
624
609
LO_2
634
Baseband filter
626
636
VGA
628
ADC
638
ADC
(I)
(Q)
To Baseband

FIG 6

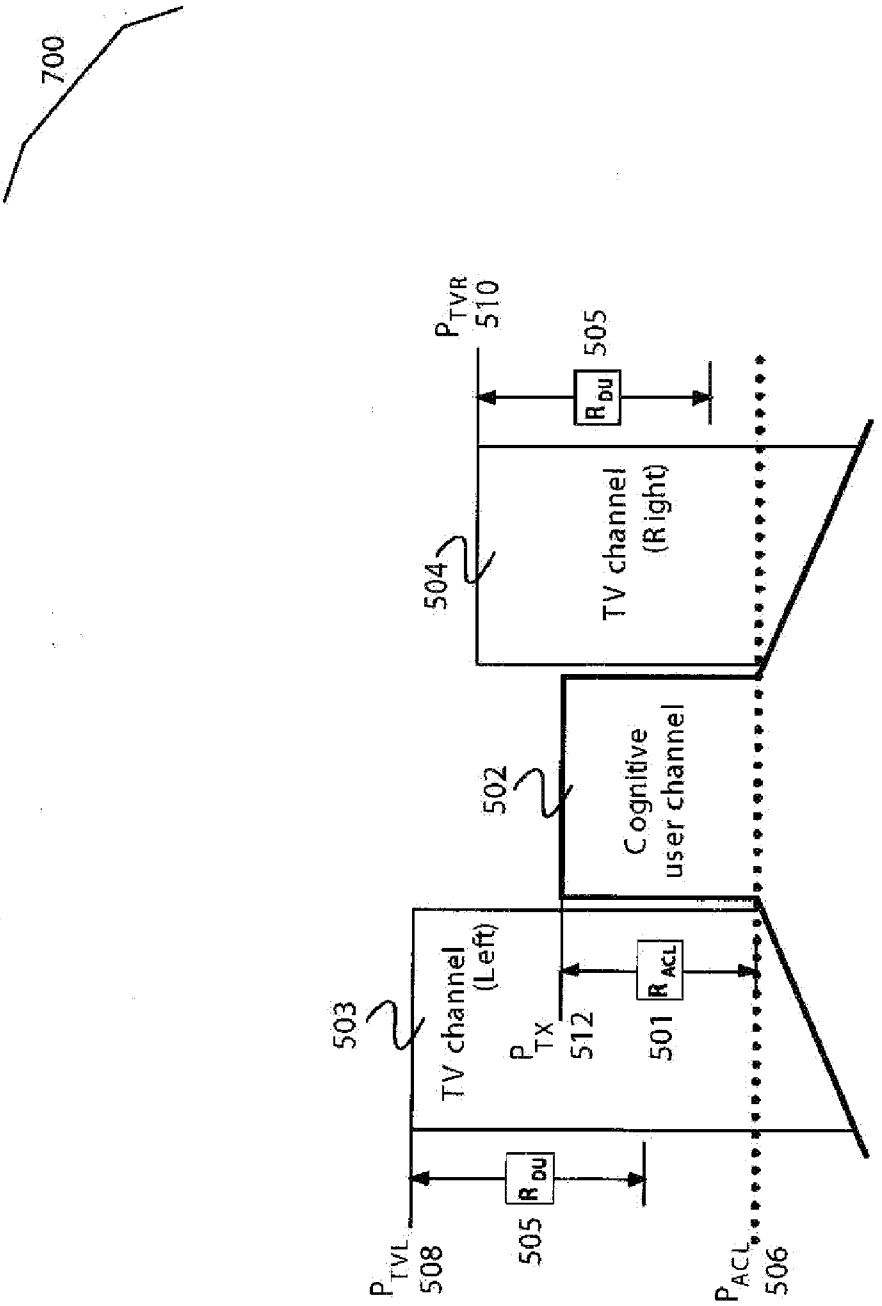
700
P_{TVR}
510
505
R_{DU}
TV channel
(Right)
504
502
Cognitive
user channel
503
TV channel
(Left)
P_{TX}
512
501
R_{ACL}
P_{TVL}
508
505
R_{DU}
P_{ACL}
506

FIG 7

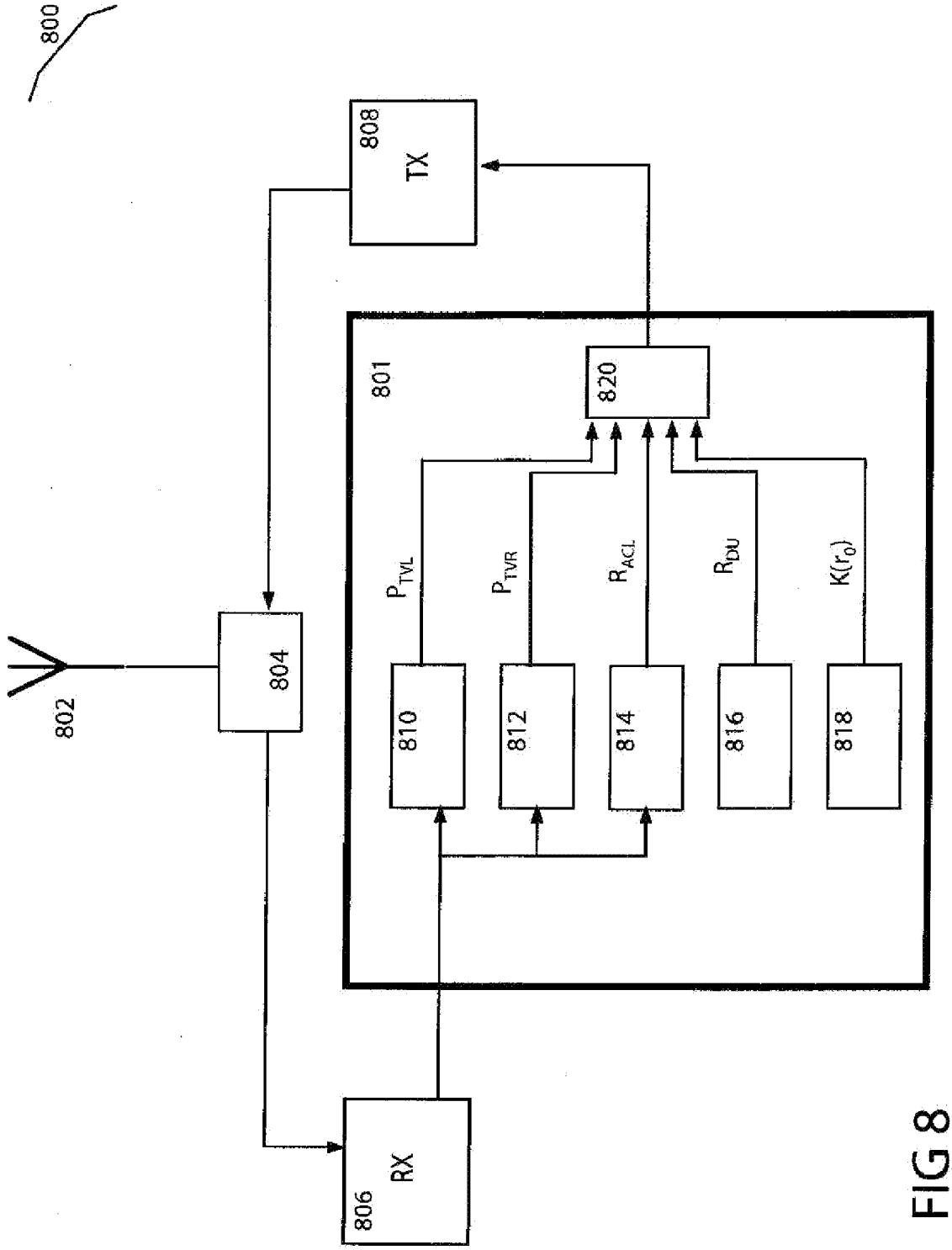
800
808
TX
801
820
P_{TVL}
P_{TVR}
R_{ACL}
R_{DU}
$K(r_0)$
804
802
810
812
814
816
818
RX
806

FIG 8

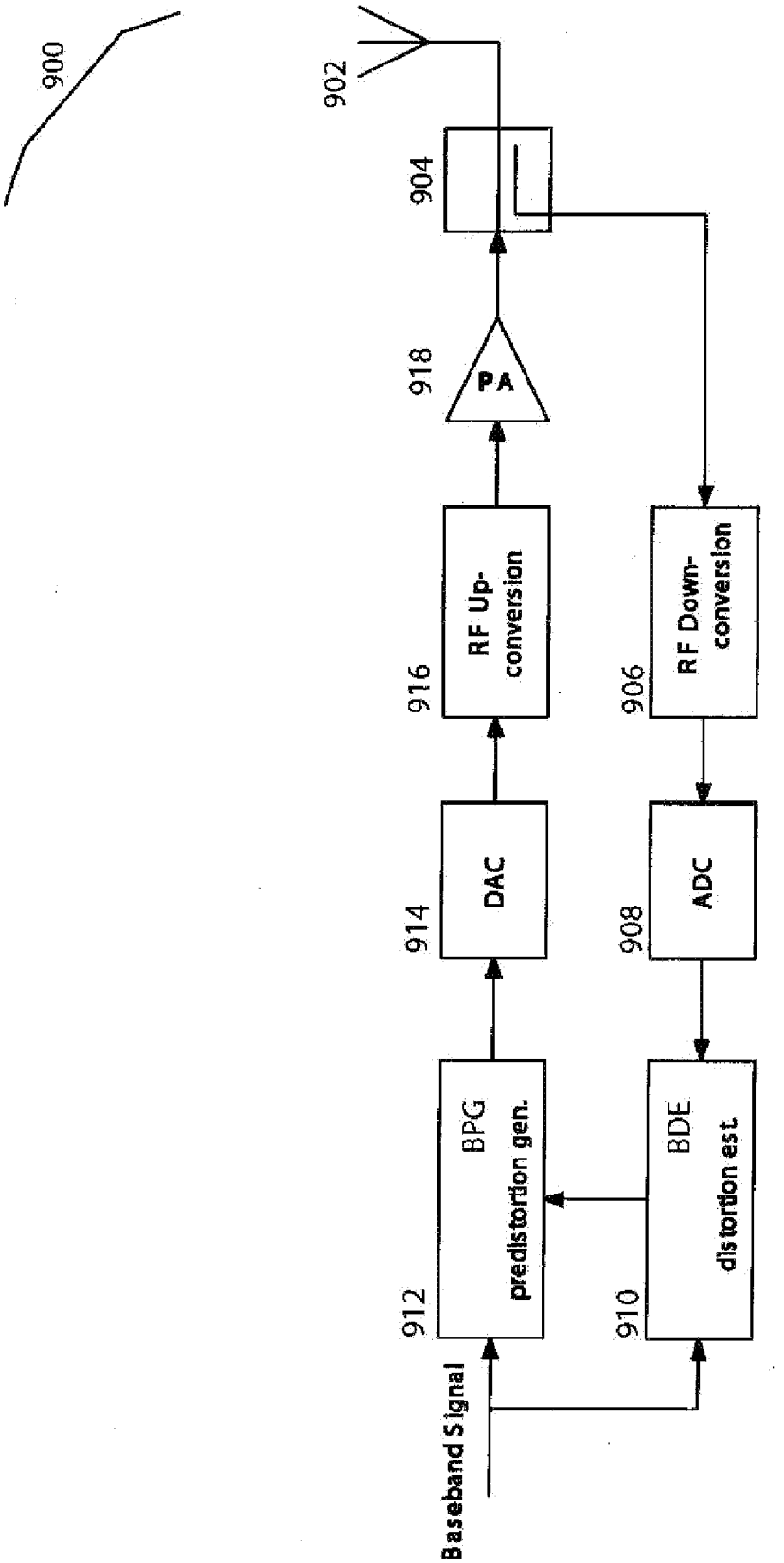
900
902
904
PA
918
RF Up-conversion
916
RF Down-conversion
906
DAC
914
ADC
908
BPG predistortion gen.
912
BDE distortion est.
910
Baseband Signal

FIG 9

DIGITAL PREDISTORTION FOR COGNITIVE RADIO

PRIORITY

[0001] This application is related to and claims priority under 35 U.S.C. 119(e) to U.S. Provisional Patent Application No. 60/890,801 filed on Feb. 20, 2007 entitled "SYSTEM AND METHOD FOR COGNITIVE RADIO" by Haiyun Tang the complete content of which is hereby incorporated by reference.

BACKGROUND

[0002] 1. Field of the Invention

[0003] The inventions herein described relate to systems and methods for cognitive radio.

[0004] 2. Description of the Related Art

Spectrum Utilization Problems

[0005] A recent study by the FCC Spectrum Task Force [United States' Federal Communications Commission (FCC), "Report of the spectrum efficiency working group," November 2002, http://www.fcc.gov/sptf/files/IPWGFinalReport.pdf] found that while the available spectrum becomes increasingly scarce, the assigned spectrum is significantly underutilized. This imbalance between spectrum scarcity and spectrum underutilization is especially inappropriate in this Information Age, when a significant amount of spectrum is needed to provide ubiquitous wireless broadband connectivity, which is increasingly becoming an indispensable part of everyday life.

[0006] Static spectrum allocation over time can also result in spectrum fragmentation. With lack of an overall plan, spectrum allocations in the US and other countries over the past several decades can appear to be random. Despite some efforts to serve best interests at the time, this leads to significant spectrum fragmentation over time. The problem is exacerbated at a global level due to a lack of coordinated regional spectrum assignments. In order to operate under such spectrum conditions, a device can benefit from operational flexibility in frequency and/or band shape; such properties can help to maximally exploit local spectrum availability.

[0007] To address the above problems, an improved radio technology is needed that is capable of dynamically sensing and locating unused spectrum segments, and, communicating using these spectrum segments while essentially not causing harmful interference to designated users of the spectrum. Such a radio is generally referred to as a cognitive radio, although strictly speaking, it may perform only spectrum cognition functions and therefore can be a subtype of a broadsense cognitive radio [J. M. III, "Cognitive radio for flexible mobile multimedia communications," *Mobile Networks and Applications*, vol. 6, September 2001.] that learns and reacts to its operating environment. Key aspects of a cognitive radio can include:

[0008] Sensing: a capability to identify used and/or unused segments of spectrum.

[0009] Flexibility: a capability to change operating frequency and/or band shape; this can be employed to fit into unused spectrum segments.

[0010] Non-interference: a capability to avoid causing harmful interference to designated users of the spectrum.

[0011] Such a cognitive radio technology can improve spectrum efficiency by dynamically exploiting underutilized spectrum, and, can operate at any geographic region without prior knowledge about local spectrum assignments. It has been an active research area recently.

FCC Spectrum Reform Initiatives

[0012] FCC has been at the forefront of promoting new spectrum sharing technologies. In April 2002, the FCC issued an amendment to Part 15 rules that allows ultra-wideband (UWB) underlay in the existing spectrum [FCC, "FCC first report and order: Revision of part 15 of the commission's rules regarding ultra-wideband transmission systems," ET Docket No. 98-153, April 2002]. In June 2002, the FCC established a Spectrum Policy Task Force (SPTF) whose study on the current spectrum usage concluded that "many portions of the radio spectrum are not in use for significant periods of time, and that spectrum use of these 'white spaces' (both temporal and geographic) can be increased significantly". SPTF recommended policy changes to facilitate "opportunistic or dynamic use of existing bands." In December 2003, FCC issued the notice of proposed rule making on "Facilitating Opportunities for Flexible, Efficient and Reliable Spectrum Use Employing Cognitive Radio Technologies" [FCC, "Facilitating opportunities for flexible, efficient, and reliable spectrum use employing cognitive radio technologies," ET Docket No. 03-108, December 2003] stating that "by initiating this proceeding, we recognize the importance of new cognitive radio technologies, which are likely to become more prevalent over the next few years and which hold tremendous promise in helping to facilitate more effective and efficient access to spectrum."

[0013] While both UWB and cognitive radio are considered as spectrum sharing technologies, their approaches to spectrum sharing are substantially different. UWB is an underlay (below noise floor) spectrum sharing technology, while cognitive radio is an overlay (above noise floor) and interlay (between primary user signals) spectrum sharing technology as shown in FIG. **1**. Through sensing combined with operational flexibility, a cognitive radio can identify and make use of spectral "white spaces" between primary user signals. Because a cognitive user signal resides in such "white spaces", high signal transmission power can be permitted as long as signal power leakage into primary user bands does not embody harmful interference.

Broadcast TV Bands

[0014] Exemplary broadcast TV bands are shown in Graph **200** of FIG. **2**. Each TV channel is 6 MHz wide. Between 0 and 800 MHz, there are a total of 67 TV channels (Channels **2** to **69** excluding Channel **37** which is reserved for radio astronomy). The NPRM [FCC, May 2004, op. cit.] excludes certain channels for unlicensed use: Channels **2-4**, which are used by TV peripheral devices, and Channels **52-69**, which are considered for future auction. Among the channels remaining, Channels **5-6**, **7-13**, **21-36**, and **38-51** are available for unlicensed use in all areas. Unlicensed use in Channels **14-20** is allowed only in areas where they are not used by public safety agencies [FCC, May 2004, op. cit.].

[0015] It can be appreciated that Channels **52-69** are currently used by TV broadcasters and it is not clear if/when they will be vacated. There is significant interference in the lower channels **5-6** and **7-13**. Based on these considerations, the

spectrum segment 470-806 MHz covering TV channels **14-69** can be of particular interest.

Spectrum Opportunity in the TV Bands

[0016] Spectrum opportunity can be a direct result of incumbent system inefficiency. In TV bands, a signal from a TV tower can cover an area with a radius of tens of kilometers. TV receivers can be sensitive to interference such that TV cell planning may be very conservative to ensure there is essentially no co-channel interference. This can leave a substantial amount of "white spaces" between co-channel TV cells as illustrated in the Map **300** of FIG. **3**. Those "white spaces" can constitute an opportunistic region for cognitive users on a particular TV channel. Each TV channel may have a differently shaped opportunistic region. The total spectrum opportunity at any location can comprise the total number of opportunistic regions covering the location. A measurement in one locality shows an average spectrum opportunity in TV channels **14-69** of about 28 channels; that can be expressed as an equivalent bandwidth of approximately 170 MHz.

BRIEF DESCRIPTION OF THE DRAWINGS

[0017] FIG. **1** Graph of spectrum sharing technologies: UWB and cognitive radio.
[0018] FIG. **2** Graph of exemplary television channel bands.
[0019] FIG. **3** Map of television co-channel coverage areas and opportunistic region.
[0020] FIG. **4** Diagram of a cognitive radio system.
[0021] FIG. **5** Graph of a DTV transmission mask.
[0022] FIG. **6** Graph of simulated non-linearities.
[0023] FIG. **7** Diagram of an adjacent channel interference situation.
[0024] FIG. **8** Diagram of an adjacent channel measurement based adaptive transmission power control system.

DETAILED DESCRIPTION

[0025] FIG. **4** depicts an embodiment of a cognitive radio system in block diagram. A transceiver **401** can be coupled with and/or in communication with one or more antennae **402**. Baseband signal processing can be provided by elements of a baseband processor **403**. Elements of a baseband processor **403** can comprise a sensing processor **404**, a transmit power control element **405**, and a pre-distortion element **406**. In some embodiments a pre-distortion element **406** can be coupled with and/or in communication with a transceiver **401**. In some embodiments a transmit power control element can be coupled with and/or in communication with a transceiver **401**. In some embodiments a collective sensing element **407** can be coupled with and/or in communication with a baseband processor **403** and/or elements comprising a baseband processor.
[0026] In some embodiments transceiver **401** can comprise transceiver and/or transmitter and/or receiver mechanisms disclosed herein. In some embodiments sensing element **404** can comprise one or more sensing mechanisms as described herein. By way of example and not limitation these sensing mechanisms can include energy sensing, NTSC signal sensing, and/or ATSC signal sensing. In some embodiments a collective sensing element **407** can provide collective sensing mechanisms as described herein.
[0027] In some embodiments transmit power control **405** can support adaptive transmit power control mechanisms described herein. In some embodiments pre-distortion element **406** can provide digital pre-distortion mechanisms as described herein.
[0028] In some embodiments baseband processor **403** can support additional processing mechanisms as described herein. By way of example and not limitation these mechanisms can include filtering and/or reconstruction.

Adaptive Transmission Power Control:

[0029] In some embodiments, a cognitive user device (cognitive user) can transmit on a channel after determining that channel to be vacant through sensing. The TV-band NPRM [FCC, May 2004, op. cit.] allows a maximum transmission power of 30 dBm (1 W). However, because of transmitter windowing and nonlinearity, a portion of cognitive user transmission power can leak into the adjacent channels and can create adjacent channel interference. Adjacent channel interference can be maintained below a specified level in order to guarantee performance in adjacent channels. Maximum transmission power from a cognitive user can be limited by such an adjacent channel interference requirement. Adaptive transmission power control can be performed by a cognitive user in order to optimize and/or maximize transmission potential for a specified channel while causing essentially no harm to operational use of adjacent channels.

Adjacent Channel Interference Requirement:

[0030] The FCC may adopt the DTV transmit mask as shown in the graph **500** of FIG. **5** for a TV-band cognitive radio. This can define exemplary constraints for a cognitive radio transmitter, notably regarding interference with adjacent channels.
[0031] Graph **600** of FIG. **6** illustrates simulations of signal power spectra for embodiments of a transmitter with specified nonlinearities. These spectra illustrate exemplary leakage behavior in some transmitter embodiments.
[0032] Given a specified inband signal transmission power P_{TX}, an amount of adjacent channel leakage (ACL) can be expressed in decibel (dB) units as:

$$P_{ACL}=P_{TX}-R_{ACL} \quad (1)$$

where R_{ACL} **701** is a ratio between inband signal power and out-of-band leakage power due to a combined effect of windowing and nonlinearity, as discussed herein with regards to non-linearity analysis and simulation. In practice, leakage can typically be dominated by transmitter nonlinearity as shown in FIG. **6** such that (in dB units):

$$R_{ACL}=2D \quad (2)$$

where D is the IP3 (third-order intercept point) clearance of Equation (19) discussed herein. In some embodiments, a digital pre-distortion technique can further reduce the above leakage. In some embodiments a digital predistortion technique can further reduce the above leakage by approximately 20 dB.
[0033] The graph **700** of FIG. **7** illustrates an adjacent channel interference situation wherein a signal transmission on a cognitive user channel **702** can cause interference to one or more adjacent TV channels **703** **704**. A maximum tolerable interference on a TV channel can be specified by a desired-to-undesired ratio (DU ratio), R_{DU} **705**. In some embodiments, R_{DU} **705** can have a typical value of approximately 30

dB. A maximum allowable interference power P_{ACL} **706** at any TV receiver can be expressed as a received TV signal power P_{TV} minus a DU ratio in dB units, i.e.

$$A_{ACL}=P_{TV}-R_{DU} \quad (3)$$

In order to set an interference-free condition that can be guaranteed on both adjacent TV channels,

$$P_{TV}=\min\{P_{TVL},P_{TVR}\} \quad (4)$$

where P_{TVL} **708** and P_{TVR} **710** are received signal powers on left and right adjacent TV channels, respectively.

[0034] Combining equations (1) and (3), a cognitive user transmission power requirement P_{TX} **712** can be obtained (in dB):

$$P_{TX}=P_{TV}-R_{DU}+R_{ACL} \quad (5)$$

[0035] Equation (5) expresses a cognitive user transmission power requirement for a TV receiver disposed at essentially the same location as a cognitive transmitter. However, in some embodiments, each cognitive transmitter can have a specified clearance region within which interference can be ignored. In the TV-band NPRM [FCC, May 2004. op. cit.], a radius of such a clearance region is specified as 10 meters. A worst-case interference can occur at an edge of a clearance region. Signal power loss $K(r_0)$ from a transmitter to an edge of the clearance region can be derived from the Friis free-space equation [T. S. Rappaport, op. cit.]. Thus a cognitive user transmission power requirement $P(r_0)$ can be expressed:

$$P(r_0)=P_{TV}-R_{DU}+R_{ACL}\Rightarrow P_{TX}=P_{TV}-R_{DU}+R_{ACL}+K(r_0) \quad (6)$$

[0036] In an exemplary embodiment, $P_{TV}=-60$ dBm, $R_{DU}=30$ dB, $R_{ACL}=60$ dB, and $K(r_0)=48$ dB, so a maximum allowed cognitive user transmission power can be:

$$P_{TX}=-60-30+60+48=18 \text{ dBm} \quad (7)$$

or approximately 60 mW.

[0037] Reducing adjacent channel leakage ratio—through windowing and/or digital pre-distortion techniques—can be key to increasing cognitive user transmission power allowed. A 10 dB reduction in R_{ACL} can result in a tenfold increase in allowed transmission power.

Adaptive Transmission Power Control:

[0038] Cognitive user transmission power for a specified channel can be maximized while causing less than a harmful level of interference in adjacent channels; cognitive user transmission power can be responsive to received signal powers on adjacent TV channels in accord with Equations (4) and (6).

[0039] In some embodiments that employ collective sensing techniques, each cognitive user can periodically broadcast its sensing results in a specified manner; such results can comprise per channel SNR estimates. By collecting sensing results, in some embodiments a cognitive user can obtain a consensus estimate of signal power on one or more specified channels. Estimated signal powers on adjacent channels can then be used to derive a suitable transmission power using Equations (4) and (6). It can be appreciated that if one of the adjacent channels is deemed vacant, that vacant channel can be advantageously removed from consideration in equation (4). An adjacent channel leakage ratio R_{ACL} in equation (6) can be obtained based on pre-tabulated transmitter nonlinearity characteristics and/or through active monitoring of a transmitted signal in an embodiment employing a digital predistortion technique.

[0040] Diagram **800** of FIG. **8** depicts a system embodiment of adjacent channel measurement based adaptive transmission power control. A cognitive radio receiver RX **806** can receive a broadcast signal from antenna **802** via coupler **804**. The receiver RX **806** can provide processing to a received signal (e.g., a broadcast signal) so as to provide specified bands and/or channels to a power measurement and control unit PMC **801**. PMC **801** can comprise power measurement elements **810 812 814** corresponding respectively to adjacent left channel signal power P_{TVL}, adjacent right channel signal power P_{TVR}, and adjacent channel leakage ratio R_{ACL}. Each of the elements **810 812 814** can operate on a signal received from RX **806** to provide a corresponding power measurement; P_{TVL}, P_{TVR}, and R_{ACL} respectively. PMC **801** can further comprise elements that provide specified parameters: desired-to-undesired ratio R_{DU} and clearance region attenuation $K(r_0)$. A control element **820** can receive parameters P_{TVL}, P_{TVR}, R_{ACL}, R_{DU}, and $K(r_0)$ from respectively corresponding elements **810 812 814 816 818** and responsively provide a control signal to cognitive radio transmitter TX **808**. Control element **820** can process parameters P_{TVL}, P_{TVR}, R_{ACL}, R_{DU}, and $K(r_0)$ according to Equation (6) and provide a control signal to TX **808** that specifies a power transmission level P_{TX} as specified by Equation (6), given the values of the parameters supplied by elements **810 812 814 816 818**. Cognitive transmitter TX **808** can be adapted to provide transmission power P_{TX} for a channel at a level specified by a control signal received from control element **820**. It can be appreciated that control element **820** can also provide evaluation of Equation (4), so as to provide a P_{TV} term to Equation (6) from the contributing parameters P_{TVL} and P_{TVR}. Thus, TX **808** can provide cognitive radio transmission of a channel through antenna **802** via coupler **804** at an advantageous power level P_{TX} specified by control element **820** and corresponding to Equation (6). It can be appreciated that in some embodiments this system comprises an adaptive system; a provided power transmission level P_{TX} can change, that is, adapt, over time and in response to variations of specified and/or measured parameters.

Transmitter Nonlinearity Analysis and Simulation:

[0041] Transmitter nonlinearity can be a cause of adjacent channel leakage. A transmitter nonlinearity can be modeled as:

$$y(t)=\alpha_0+\alpha_1x(t)+\alpha_2x^2(t)+\alpha_3x^3(t)+\ldots \quad (8)$$

[0042] For a passband signal with appropriate filtering, a nonlinearity model can be approximated as:

$$y(t)\approx\alpha_1x(t)+\alpha_3x^3(t) \quad (9)$$

and an equivalent baseband representation of a signal that has experienced such nonlinearity can be expressed as

$$y(t)=\alpha_1 s(t)+\frac{3\alpha_3}{4}|s(t)|^2 s(t) \quad (10)$$

Let

$$y_1(t)=s(t) \quad (11)$$

$$y_3(t)=|s(t)|^2 s(t) \quad (12)$$

[0043] Using a baseband signal expression for s(t), it follows that:

$$\begin{aligned} Y_1(f) &= \int_{-\infty}^{\infty} y_1(t) e^{-j2\pi f t} dt \\ &= \sum_{k\in\Omega} X(k) \int_{-\infty}^{\infty} h(t) e^{j2\pi \frac{k}{T} t} e^{-j2\pi f t} dt \\ &= \sum_{k\in\Omega} X(k) H\left(f - \frac{k}{T}\right) \end{aligned} \tag{13}$$

and

$$\begin{aligned} Y_3(f) &= \int_{-\infty}^{\infty} y_3(t) e^{-j2\pi f t} dt \\ &= \int_{-\infty}^{\infty} s(t)s(t)s^*(t) e^{-j2\pi f t} dt \\ &= \sum_{k,l,m\in\Omega} X(k)X(l)X^*(m) \int_{-\infty}^{\infty} g(t) e^{j2\pi \frac{k+l-m}{T} t} e^{-j2\pi f t} dt \\ &= \sum_{k,l,m\in\Omega} X(k)X(l)X^*(m) G\left(f - \frac{k+l-m}{T}\right) \end{aligned} \tag{14}$$

where in the second equality

$$g(t)=h^3(t) \tag{15}$$

whose Fourier transform can be expressed as

$$G(f)=H(f) \otimes H(f) \otimes H(f) \tag{16}$$

Note that the window h(t) is a real function.

[0044] A signal spectrum can be expressed

$$\begin{aligned} Y(f) &= \alpha_1 Y_1(f) + \frac{3\alpha_3}{4} Y_3(f) \\ &= \alpha_1 \sum_{k\in\Omega} X(k) H\left(f - \frac{k}{T}\right) + \frac{3\alpha_3}{4} \sum_{k,l,m\in\Omega} X(k)X(l)X^*(m) G \\ &\quad \left(f - \frac{k+l-m}{T}\right) \end{aligned} \tag{17}$$

and the power spectrum can be expressed

$$\begin{aligned} I(f) &= E[|Y(f)|^2] \\ &= E\left[\left\{\alpha_1 Y_1(f) + \frac{3\alpha_3}{4} Y_3(f)\right\}\left\{\alpha_1 Y_1^*(f) + \frac{3\alpha_3}{4} Y_3^*(f)\right\}\right] \\ &= \alpha_1^2 E[|Y_1(f)|^2] + 2\alpha_1 \frac{3\alpha_3}{4} Re\{E[Y_3(f)Y_1^*(f)]\} + \\ &\quad \left(\frac{3\alpha_3}{4}\right)^2 E[|Y_3(f)|^2] \end{aligned} \tag{18}$$

[0045] A relationship between device nonlinearity coefficients α_1 and α_3 can be expressed in terms of a two-tone IP3. Specifically, input power to the two-tone test can be P_{In} at a distance D (in dB units) from an IP3 point P_{IP3}, i.e.

$$P_{IP3}=D\alpha_1^2 P_{In} \tag{19}$$

it follows that

$$\frac{3\alpha_3}{4} = -\frac{\alpha_1^3}{P_{IP3}} = -\frac{\alpha_1}{DP_{In}} \tag{20}$$

where compressive third-order nonlinearity can be assumed with $\alpha_3<0$. A multi-carrier (such as OFDM) signal of substantially the same input power can be applied to a nonlinear device; the output power spectrum can be expressed

$$\begin{aligned} &I(f) = \\ &\alpha_1^2 E[|Y_1(f)|^2] - 2\alpha_1^2 \frac{1}{DP_{In}} \mathrm{Re}\{E[Y_3(f)Y_1^*(f)]\} + \alpha_1^2 \frac{1}{D^2 P_{In}^2} E[|Y_3(f)|^2] \end{aligned} \tag{21}$$

where the input power of the multi-carrier signal can be expressed

$$\begin{aligned} P_{In} &= E\left[\frac{1}{T_W}\int_{-\infty}^{\infty} |y_1(t)|^2 dt\right] \\ &= E\left[\frac{1}{T_W}\int_{-\infty}^{\infty} |Y_1(f)|^2 df\right] \\ &= \frac{1}{T_W}\int_{-\infty}^{\infty} E[|Y_1(f)|^2] df \end{aligned} \tag{22}$$

[0046] The graph **600** of FIG. **6** shows simulated multi-carrier signal power spectrums at different IP3s (or different Ds). Nonlinearity can cause spectrum "shoulders" in adjacent bands. A difference (in decibel units, (dB)) between inband signal power and the shoulder can be roughly 2D, or the system dynamic range P_{DR}.

[0047] The graph **600** illustrates simulated signal power spectra under varying device nonlinearities in a multi-carrier system with subcarrier spacing 100 kHz, β=0.16, number of guard band subcarriers **8** (and number of valid data subcarriers **52**). Individual curves **602 604 606 608** are shown for IP3-related distance D values of (respectively) 15 dB, 25 dB, 35 dB, and ∞.

[0048] In some embodiments with a fixed output power, a higher device IP3 can be required in order to reduce adjacent channel leakage. In some embodiments, an IP3 requirement can be reduced by applying a digital predistortion technique and/or process.

Digital Predistortion:

[0049] Diagram **900** depicts an embodiment of a system adapted to provide digital predistortion. An RF signal can be coupled with an antenna **902** for transmission. A signal representative of such a transmitted signal can be obtained via a coupling device **904**; such a representative signal can be of significantly lower power than the transmitted signal. A representative signal can be down-converted, sampled, and fed back to a baseband distortion estimator where it can be compared with a corresponding source baseband signal in order to estimate distortion. In the depicted embodiment **900**, down-conversion can be provided by an RF down-converter **906**, sampling and conversion to a digital representation can be provided by an analog to digital converter ADC **908**, and a baseband distortion estimator BDE **910** can provide comparison and/or estimation. Resulting distortion information can be provided to a baseband pre-distortion generator such as BPG **908**. BPG **908** can pre-compensate a baseband signal for distortion that the signal can be expected to experience as it passes through elements of a transmitter RF chain. That is, a signal can be pre-compensated for estimated distortion. It can be appreciated that an estimated distortion can comprise con-

tributions from any and/or all nonlinear elements in a transmitter chain. In some typical embodiments a major contribution to distortion can be attributed to a power amplifier such as PA **914** depicted in Diagram **900**. In some embodiments, a distortion compensation loop such as the system of Diagram **900** can run continuously during a signal transmission process in order to track and/or adapt to any variations of transmitter nonlinearity. By way of non-limiting example, in some embodiments a distortion compensation loop—that is, a digital predistortion system—can track and/or adapt to a transmitter nonlinearity corresponding to variations in temperature.

[0050] In some embodiments, a baseband distortion estimator BDE **910** can determine and/or provide a distortion factor, herein described, to a baseband predistortion generator BPG **912**. In some embodiments, a baseband predistortion generator can operate on a baseband signal s(t) to provide a predistorted signal $s_{PD}(t)$, as specified herein, to an RF transmission chain. An RF transmission chain can comprise a digital to analog converter DAC **914**, an RF upconverter **916**, and a power amplifier PA **918**, as depicted in Diagram **900**. A baseband predistortion generator BPG **912** can be adapted to provide a predistorted signal $s_{PD}(t)$ responsive to a baseband signal s(t) and a distortion factor, as specified by Equation (30).

[0051] In some embodiments, information provided to a baseband predistortion generator BPG **912** from a baseband distortion estimator BDE **910** can comprise any known and/or convenient representation of nonlinearity terms. By way of non-limiting example, such nonlinearity terms can comprise coefficients of a nonlinearity model such as those of Equation (8).

[0052] In a multi-carrier system, after appropriate signal processing, e.g. window truncation and FFT, a frequency-domain signal seen by a baseband distortion estimator can be expressed

$$\sum_{n\in\Omega} X(n) + \frac{1}{\alpha_1}\frac{3\alpha_3}{4}\sum_{k,l,m\in\Omega} X(k)X(l)X^*(m) \tag{23}$$

[0053] A signal on a channel n∈Ω can be expressed

$$Y(n) = X(n) + \frac{1}{\alpha_1}\frac{3\alpha_3}{4}\sum_{k+l-m=n} X(k)X(l)X^*(m) \tag{24}$$

and a signal on any channel n∉Ω can be expressed

$$Y(n) = \frac{1}{\alpha_1}\frac{3\alpha_3}{4}\sum_{k+l-m=n} X(k)X(l)X^*(m) \tag{25}$$

[0054] A distortion factor

$$\frac{1}{\alpha_1}\frac{3\alpha_3}{4} \tag{26}$$

can be estimated using signals on channels of adjacent bands. Since signal values X(k)s can be known, it can be possible to compute

$$\sum_{k+l-m=n} X(k)X(l)X^*(m) \tag{27}$$

and then to estimate a distortion factor as

$$\left[\frac{1}{\alpha_1}\frac{3\alpha_3}{4}\right]_{est} = \frac{Y(n)}{\sum_{k+l-m=n} X(k)X(l)X^*(m)} \tag{28}$$

[0055] However, the complexity of computing an intermodulation product sum $\Sigma_{k+l-m=n}X(k)X(l)X^*(m)$ can discourage such an approach. The case of a preamble for which an intermodulation product sum can be pre-computed can be an exception.

[0056] A low-complexity approach can be to use signal power in order to estimate a distortion factor:

$$\left[\left(\frac{1}{\alpha_1}\frac{3\alpha_3}{4}\right)^2\right]_{est} = \frac{E[|Y(n)|^2]}{E\left[\left|\sum_{k+l-m=n} X(k)X(l)X^*(m)\right|^2\right]} \tag{29}$$

since $E[|\Sigma_{k+l-m=m}X(k)X(l)X^*(m)|^2]$ can be a constant that depends primarily on a position of a target channel n relative to a channel set Ω and thus can be pre-computed. In some embodiments, this approach can take a relatively long time to reach a desired accuracy due to an averaging operation that can contribute to estimating $E[|Y(n)|^2]$.

[0057] Once a distortion factor can be obtained, a signal pre-distortion operation can be carried out as expressed here:

$$s_{PD}(t) = s(t) - (1+e)\frac{1}{\alpha_1}\frac{3\alpha_3}{4}|s(t)|^2 s(t) \tag{30}$$

where $s_{PD}(t)$ can be a pre-distorted signal sent to a RF transmitter chain and |e|<<1 can accounts for estimation error. After passing through the transmitter chain, the signal can be expressed:

$$\begin{aligned}\alpha_1 s_{PD}(t) + \frac{3\alpha_3}{4}|s_{PD}(t)|^2 s_{PD}(t) &= \alpha_1\left[s(t) - (1+e)\frac{1}{\alpha_1}\frac{3\alpha_3}{4}|s(t)|^2 s(t)\right] + \\ &\frac{3\alpha_3}{4}|s(t)|^2\left[1 - (1+e)\frac{1}{\alpha_1}\frac{3\alpha_3}{4}|s(t)|^2\right]^2 \cdot \\ \left[s(t) - (1+e)\frac{1}{\alpha_1}\frac{3\alpha_3}{4}|s(t)|^2 s(t)\right] &\approx \\ \alpha_1 s(t) - (1+e)\frac{3\alpha_3}{4}|s(t)|^2 s(t) + \frac{3\alpha_3}{4}|s(t)|^2 s(t) - & \\ 2(1+e)\frac{1}{\alpha_1}\left(\frac{3\alpha_3}{4}\right)^2|s(t)|^4 s(t) - (1+e)\frac{1}{\alpha_1}\left(\frac{3\alpha_3}{4}\right)^2|s(t)|^4 s(t) &\approx \\ \alpha_1 s(t) - e\frac{3\alpha_3}{4}|s(t)|^2 s(t) - 3\frac{1}{\alpha_1}\left(\frac{3\alpha_3}{4}\right)^2|s(t)|^4 s(t) &= \\ \alpha_1 s(t)\left\{1 - \underbrace{e\frac{1}{\alpha_1}\frac{3\alpha_3}{4}|s(t)|^2}_{\text{Estimation error}} - \underbrace{3\left[\frac{1}{\alpha_1}\frac{3\alpha_3}{4}|s(t)|^2\right]^2}_{\text{Higher-order distortion}}\right\}\end{aligned} \tag{31}$$

[0058] Since without pre-distortion, the signal can be expressed

$$\alpha_1 s(t)\left[1+\frac{1}{\alpha_1}\frac{3\alpha_3}{4}|s(t)|^2\right] \tag{32}$$

[0059] Intermodulation can be assumed to be about 30 dB below signal power, e.g.

$$\left[\frac{1}{\alpha_1}\frac{3\alpha_3}{4}|s(t)|^2\right]^2 \approx -30 \text{ dB} \tag{33}$$

if the estimation accuracy is about 20 dB, i.e.

$$10\log_{10}e^2 \approx -20 \text{ dB} \tag{34}$$

then an estimation error power can be expressed:

$$\left[e\frac{1}{\alpha_1}\frac{3\alpha_3}{4}|s(t)|^2\right]^2 \approx -20+(-30)=-50 \text{ dB} \tag{35}$$

[0060] A high-order distortion power can be expressed:

$$\left\{3\left[\frac{1}{\alpha_1}\frac{3\alpha_3}{4}|s(t)|^2\right]^2\right\}^2 \approx 10+(-60)=-50 \text{ dB} \tag{36}$$

[0061] Overall intermodulation power after pre-distortion can then be about −50 dB. Intermodulation power can be limited by estimation error and/or higher-order distortion. In order to reduce intermodulation power further, a 5th-order distortion compensation can be specified, in addition to specifying a 3rd-order distortion compensation process as described above.

[0062] In the foregoing specification, the embodiments have been described with reference to specific elements thereof. It will, however, be evident that various modifications and changes may be made thereto without departing from the broader spirit and scope of the embodiments. For example, the reader is to understand that the specific ordering and combination of process actions shown in the process flow diagrams described herein is merely illustrative, and that using different or additional process actions, or a different combination or ordering of process actions can be used to enact the embodiments. For example, specific reference to NTSC and/or ATSC and/or DTV embodiments are provided by way of non-limiting examples. Systems and methods herein described can be applicable to any other known and/or convenient channel-based communication embodiments; these can comprise single and/or multiple carriers per channel. The specification and drawings are, accordingly, to be regarded in an illustrative rather than restrictive sense.

What is claimed is:

1. A method comprising:

receiving a signal;

modifying said signal; and

determining a pre-distortion based, at least in part, on said received signal and said modified signal.

* * * * *