July 5, 1938. C. A. LORD 2,122,985

CONTINUOUS STIRRUP FOR CONCRETE CONSTRUCTION WORK

Filed June 10, 1937

Fig. 1

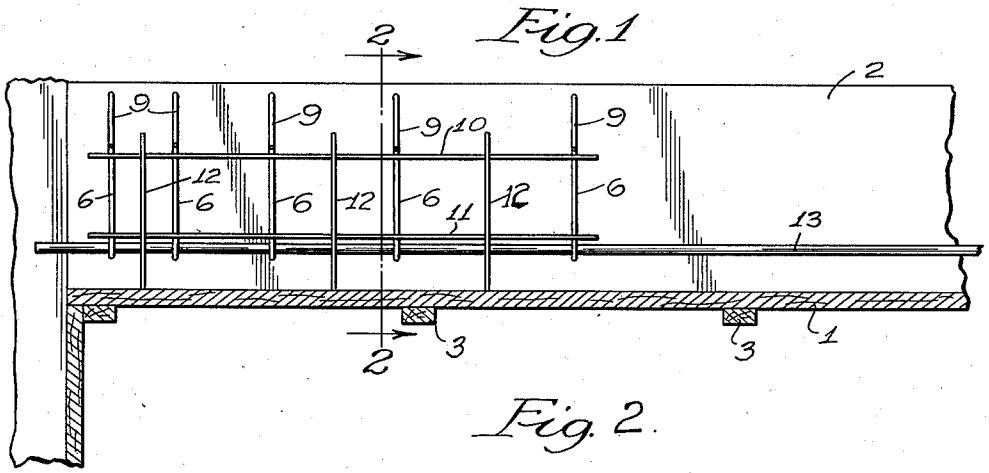

Fig. 2.

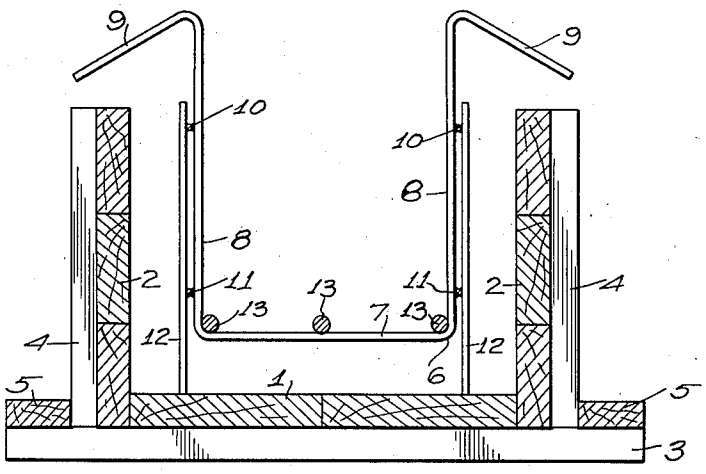

Fig. 3

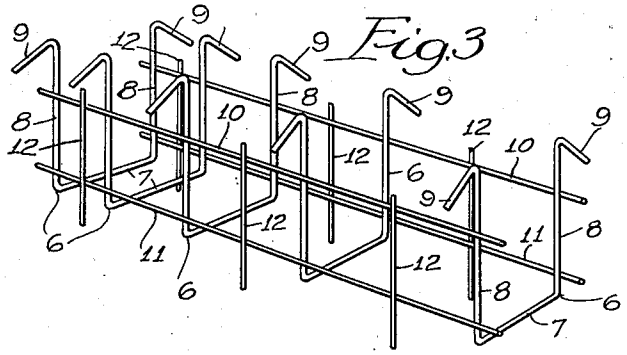

Fig. 4

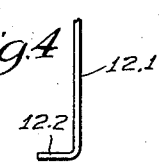

Inventor:
Chester A. Lord,
By
Fisher, Clapp, Soans & Pond,
Attorneys.

Witnesses:
[illegible] Anderson
H. I. Seber T.

Patented July 5, 1938 2,122,985

UNITED STATES PATENT OFFICE

2,122,985

CONTINUOUS STIRRUP FOR CONCRETE CONSTRUCTION WORK

Chester A. Lord, Chicago, Ill., assignor to Universal Form Clamp Co., Chicago, Ill., a corporation of Illinois

Application June 10, 1937, Serial No. 147,427

5 Claims. (Cl. 72—122)

The main objects of this invention are to provide an improved form of continuous stirrup for reinforcing concrete girders, beams and joists; to provide a continuous stirrup having improved spacing and supporting means for supporting it in the usual temporary form or mold and for spacing it the required distance from the soffit of the form; to provide improved spacing and supporting means for continuous stirrups which will also serve to brace the stirrups and prevent distortion thereof during pouring of the concrete; and to provide an improved continuous stirrup of this kind which is sturdy and simple in construction and which may be easily and accurately placed in the mold even by unskilled labor.

An illustrative embodiment of this invention is shown in the accompanying drawing, wherein:

Figure 1 is a longitudinal fragmentary section of a beam mold, showing an improved continuous stirrup supported therein.

Figure 2 is an enlarged transverse section taken on the line 2—2 of Figure 1.

Figure 3 is a perspective of the improved continuous stirrup.

Figure 4 is a detail in elevation of a modified form of leg.

In the form shown, the improved reinforcing unit is supported in a temporary form or mold comprising a soffit 1, and side walls 2, supported on horizontal battens 3. The side walls 2 are reinforced with the usual vertical battens 4 and are secured against spreading by kickers 5.

The improved reinforcing unit or continuous stirrup comprises a plurality of transverse reinforcing bars in the form of substantially U-shaped stirrups 6 each of which consists of a base 7 and a pair of side arms 8, the free ends of which are bent outwardly and downwardly to provide the usual anchors 9.

These U-shaped stirrups 6 are secured together as a unit, in substantially parallel spaced relation to one another, by longitudinal reinforcing bars 10 and 11 arranged in pairs at respectively opposite sides of the unit and spot welded or otherwise rigidly secured to the outer sides of the arms 8.

In order that the base portions 7 may be spaced the required distance from the soffit of the form, the unit is provided with independent vertical legs 12 which are spot welded or otherwise rigidly secured to the longitudinal reinforcing bars 10 and 11. Any desired number of these legs may be used. They are preferably located intermediate the U-shaped stirrups.

If desired the legs may be bent to provide feet to prevent the legs from penetrating the form soffit. As illustrated in Fig. 4, the lower end of a leg 12.1 is bent at right angles to the leg to form a foot 12.2.

In operation, the improved unit is merely placed in the form and the usual reinforcing rods 13 may then be lowered on to the base members 7.

With this improved construction, the legs not only support the unit on and space it vertically from the mold but they also brace it against distortion during handling and also during the pouring of the concrete.

I claim:

1. A reinforcing structural unit adapted to be supported on a temporary form in the construction of concrete beams, comprising a plurality of stirrups disposed transversely of the unit and spaced lengthwise of the latter, vertically spaced longitudinal reinforcing bars secured to each side of said stirrups for holding the latter in spaced relation, and independent legs located between said stirrups and secured to said reinforcing bars for supporting the unit on the form.

2. A reinforcing structural unit of the class described adapted to be supported on a temporary form in the construction of concrete beams, comprising a plurality of U-shaped stirrups disposed transversely of the unit and spaced lengthwise of the latter, a plurality of longitudinal reinforcing bars secured to said stirrups on each side of the latter for holding said stirrups in spaced relation, and independent legs located between said stirrups and secured to and crosswise of the reinforcing bars on each side of said stirrups for supporting the unit on the form.

3. A reinforcing structural unit of the class described, adapted to be supported on a temporary form in the construction of concrete beams, comprising a plurality of parallel U-shaped stirrups disposed transversely of the unit and spaced lengthwise of the latter, upper and lower horizontal reinforcing bars secured to said stirrups on each side of the latter for holding said stirrups parallel and in spaced relation, and independent vertical legs located between said stirrups and secured to and crosswise of the outer sides of said reinforcing bars on each side of said stirrups for supporting the unit on the form.

4. A reinforcing structural unit adapted to be supported on a temporary form in the construction of concrete beams, comprising a plurality of parallel U-shaped stirrups disposed transversely of the unit and spaced lengthwise of the latter, a plurality of vertically spaced longitudinal re-

inforcing bars secured to said stirrups on each side of the latter for holding said stirrups in parallel and spaced relation, and independent individual legs respectively disposed substantially midway between adjacent stirrups and secured to and crosswise of said reinforcing bars on each side of said stirrups.

5. A reinforcing structural unit adapted to be supported on a temporary form in the construction of concrete beams, comprising a plurality of parallel U-shaped stirrups disposed transversely of the unit and spaced lengthwise of the latter, said stirrups formed with vertical sides, a plurality of vertically spaced parallel longitudinal reinforcing bars secured to the outer sides of said stirrups on each side of the latter for maintaining said stirrups in parallel and spaced relation, and independent individual vertical legs respectively disposed substantially midway between adjacent stirrups and secured to and crosswise of the outer sides of said reinforcing bars on each side of said stirrups.

CHESTER A. LORD.