E. P. KLUG.

CYLINDER PRESS.

APPLICATION FILED AUG. 20, 1909.

955,647.

Patented Apr. 19, 1910.

3 SHEETS—SHEET 1.

Fig. 1.

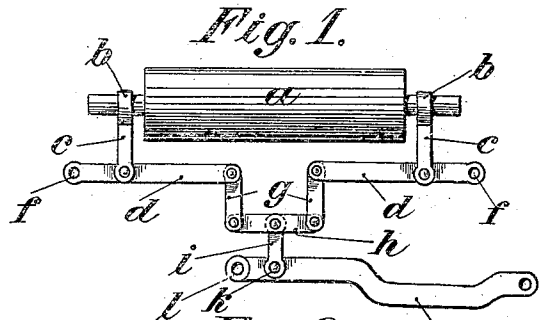

Fig. 2.

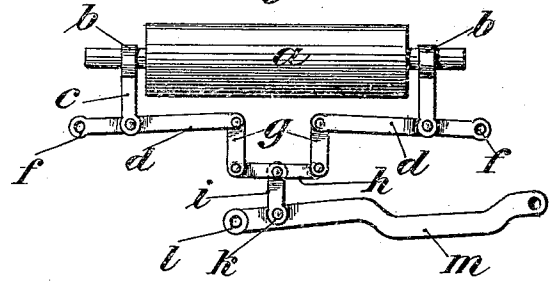

Witnesses:
P. F. Nagle.
L. Douville.

By

Inventor:
Eduard Paul Klug.
Wiedersheim & Fairbanks,
Attorneys.

ANDREW B. GRAHAM CO., PHOTO-LITHOGRAPHERS, WASHINGTON, D. C.

E. P. KLUG.
CYLINDER PRESS.
APPLICATION FILED AUG. 20, 1909.

955,647.

Patented Apr. 19, 1910.

3 SHEETS—SHEET 2.

Fig. 3.

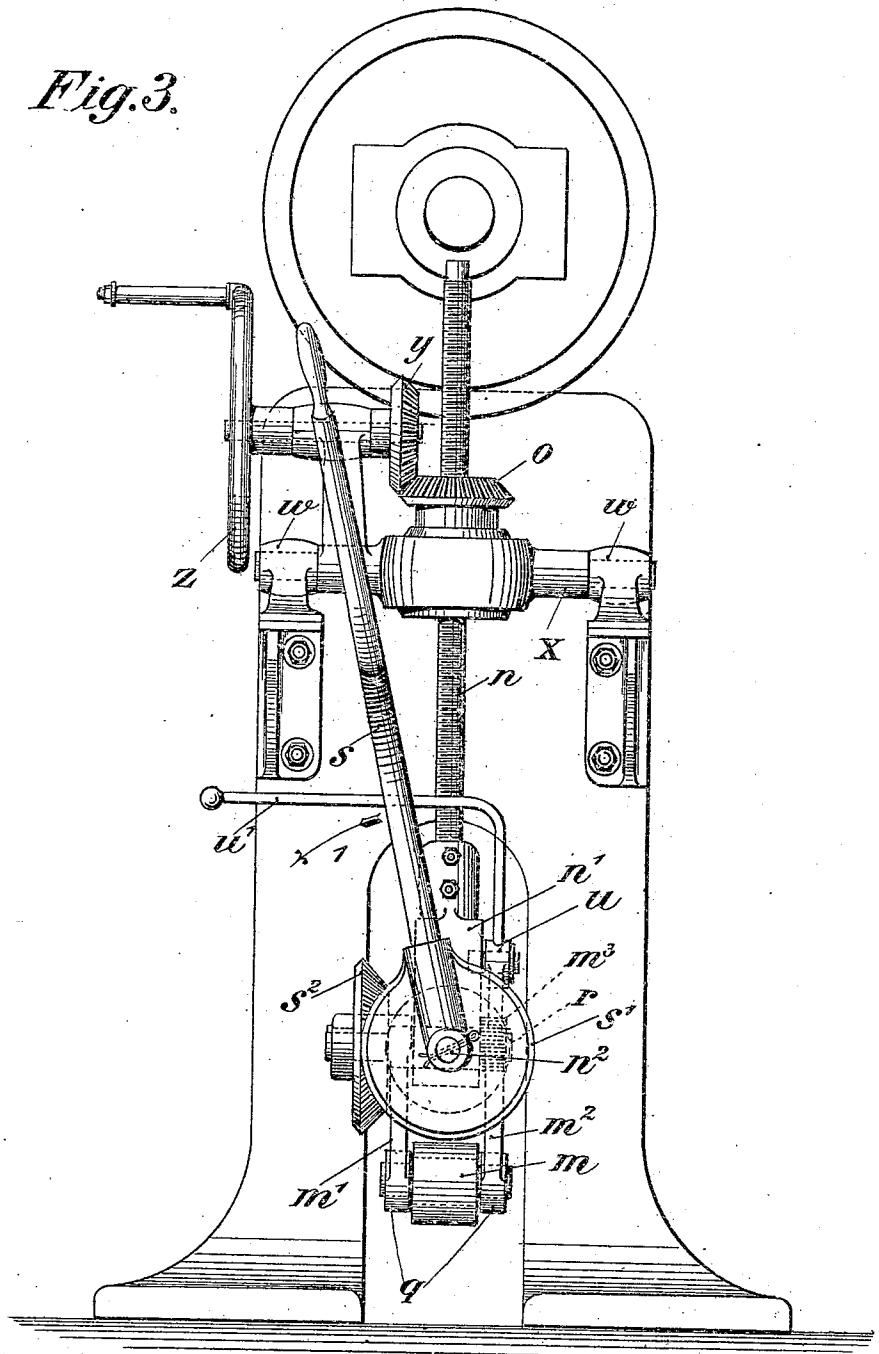

Witnesses:
P. F. Nagle.
L. Douville.

Inventor:
Eduard Paul Klug
By Diederichsen & Fairbank
Attorneys.

E. P. KLUG.
CYLINDER PRESS.
APPLICATION FILED AUG. 20, 1909.

955,647. Patented Apr. 19, 1910.

3 SHEETS—SHEET 3.

Fig. 4.

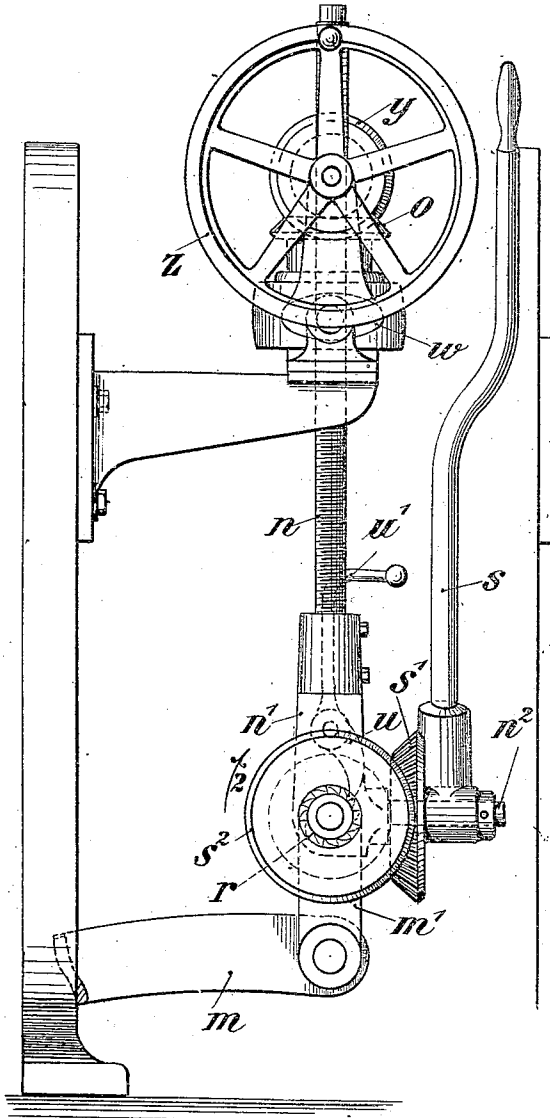

Fig. 5.

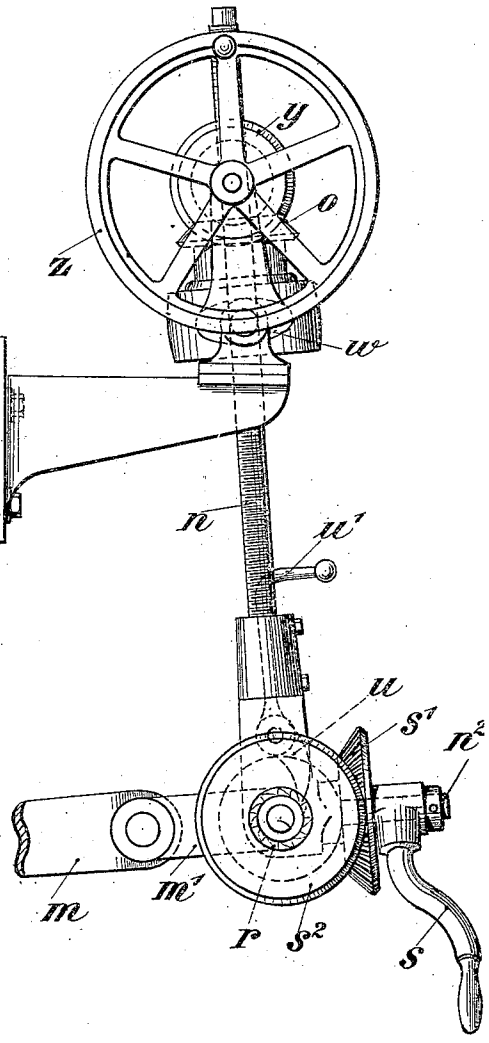

Witnesses:
P. F. Nagle
L. Douville.

Inventor:
Eduard Paul Klug.
By Dieterich & Fairbanks
Attorneys.

ANDREW B. GRAHAM CO., PHOTO-LITHOGRAPHERS, WASHINGTON, D. C.

UNITED STATES PATENT OFFICE.

EDUARD PAUL KLUG, OF KRIMMITSCHAU, GERMANY.

CYLINDER-PRESS.

955,647. Specification of Letters Patent. Patented Apr. 19, 1910.

Application filed August 20, 1909. Serial No. 513,793.

To all whom it may concern:

Be it known that I, EDUARD PAUL KLUG, manufacturer, a subject of the German Empire, residing at No. 29 Untere Mühlgasse, Krimmitschau, Saxony, Germany, have invented new and useful Improvements in Cylinder-Presses, of which the following is a specification.

My invention has reference to cylinder presses and relates in particular to improvements in the devices for effecting quick lift of the pressing cylinder. Contrivances for this purpose have already been constructed in which the cylinder is carried by lever mechanism, which, on its actuation by means of a swing-spindle engaging the main lever, in conjunction with a link connecting the spindle with the main lever and acting as a bent lever, enables the cylinder to be raised or lowered more rapidly than is possible by turning the nut which runs the adjusting spindle up and down. In such devices the said link has been operated by a hand lever, fulcrumed on a pin located at right angles to the longitudinal axis of the pressing cylinder, so that this hand-lever, after being thrown over, occupies a position which renders it substantially equivalent to an extension of the main lever of the mechanism for lifting the cylinder. Owing to this lateral swinging out of the hand lever considerable space has been necessary at the side of the machine. According to my invention I render such space unnecessary, and this I do by so constructing the device for lifting the said main lever, that the hand lever swings in a plane which is at right angles to the longitudinal axis of the pressing cylinder.

One constructional form of the invention is illustrated in the accompanying drawing, in which—

Figures 1 and 2 are elevations showing the device diagrammatically with the cylinder in raised and lowered positions respectively. Fig. 3 is an end elevation of the device, drawn to a larger scale, with such parts of the press as are necessary for purposes of elucidation, the cylinder being in lowered position. Figs. 4 and 5 are side elevations of Fig. 3, with the cylinder in lowered and raised positions respectively.

The pressing cylinder *a* (Figs. 1 and 2) is mounted in the bearings *b* of the arms *c*, which can be raised and lowered by means of a lever system. This latter consists of two single armed levers *d*, turning on stationary pins *f*. The inner ends of these levers *d* are each provided with a link *g*, and the lower end of each of these links is jointed to another link *h*. To the middle of this link *h* there is pivoted a link *i*, whose lower end is pivoted at *k* to the main lever *m*, which turns on a stationary pin *l*. If the main lever *m* is swung upward on the pin *l*, the cylinder *a* will be raised; and vice versa, when the lever *m* is swung down, the cylinder *a* will be lowered. The adjusting spindle *n* (Figs. 3–5) can not only be operated in vertical direction, but can also be swung out, the gear *o* (Fig. 3), which constitutes the nut of the spindle, being located in a cross-bar *x*, which turns in bearings *w* and also carrying the gear *y*, which meshes with the gear *o*, and the handwheel *z* for rotating the latter gear. On the spindle *n* being swung, the parts *o*, *x*, *y*, *z* thus oscillate with it. This portion of the mechanism, however, in itself forms no part of the present invention.

For the purpose of rapidly raising the main lever *m*, and thus the cylinder *a*, by means of a hand lever, which is located in a plane at right angles to the longitudinal axis of the cylinder *a*, the following mechanism is employed. The foot *n'* of the spindle *n* is provided with a pin n^2, preferably cast on to it, on which the hand lever *s* turns. This lever has a boss portion on which is cast a bevel wheel *s'*. This latter meshes with the bevel wheel s^2, which is integral with, or is rigidly connected to, the one part *m'* of the link *q*, which turns on the pin *r* of the spindle foot *n'* and acts in the manner of a bent lever. If the hand lever *s* is thrown over in the direction of the arrow 1 (Fig. 3), the bevel gear s^2 will be turned in the direction of the arrow 2 (Fig. 4), and will carry the link *q* with it, so that the latter will act as a bent lever on the main lever *m*, that is to say, it will turn the latter upward about the pin *l*, whereby the cylinder *a* will be rapidly lifted (Fig. 5).

For the purpose of locking the cylinder *a* in the elevated position, a suitable device is furnished. This may be provided by constructing one end of the part m^2 of the link *q* with ratchet teeth, between which there engages a pawl *u*, pivoted to the foot *n'* of the spindle *n* and provided with a handle *u'*. To lower the cylinder *a* again, it is only necessary to turn the handle *u'* of the pawl *u*, whereby the latter is disengaged from the

ratchet teeth, so that the hand lever *s* can be returned to its initial position (Figs. 2 and 4) again.

Having thus described my invention, I declare that what I claim as new and desire to secure by Letters Patent is:—

1. In a cylinder press, in combination, a cylinder, levers for raising and lowering the same, a main lever for operating said levers, means comprising a swinging screw-spindle for actuating said main lever and a link connecting said spindle to said main lever, and means for effecting quick lift of the cylinder, comprising a hand lever fulcrumed to said spindle and moving in a plane at right angles to the longitudinal axis of the cylinder, and means for positively connecting the hand lever with said link, whereby on the hand lever being thrown over, the link is turned and the main lever operated, while the spindle at the same time is swung out, substantially as described.

2. In a cylinder press, in combination, a cylinder, levers for raising and lowering the same, a main lever for operating said levers, means comprising a swinging screw spindle for actuating said main lever and a link connecting said spindle to said main lever, and means for effecting quick lift of the cylinder, comprising a bevel gear fixed on the hand lever, and a second bevel gear fixed on the said link, and meshing with first said gear, whereby on the hand lever being thrown over its gear rotates the gear fixed to the link and thus causes the latter to operate the main lever, substantially as described.

In witness whereof I have hereunto signed my name this second day of August 1909, in the presence of subscribing witnesses.

EDUARD PAUL KLUG.

Witnesses:
GUIDO SARGE,
ALFRED ENGE,
ROBERT HEINRICH NIER,
A. KRACHTOD.