Dec. 27, 1938. B. H. THURMAN 2,142,062

PROPORTIONING APPARATUS

Filed Feb. 15, 1938 2 Sheets-Sheet 1

Fig. 1.

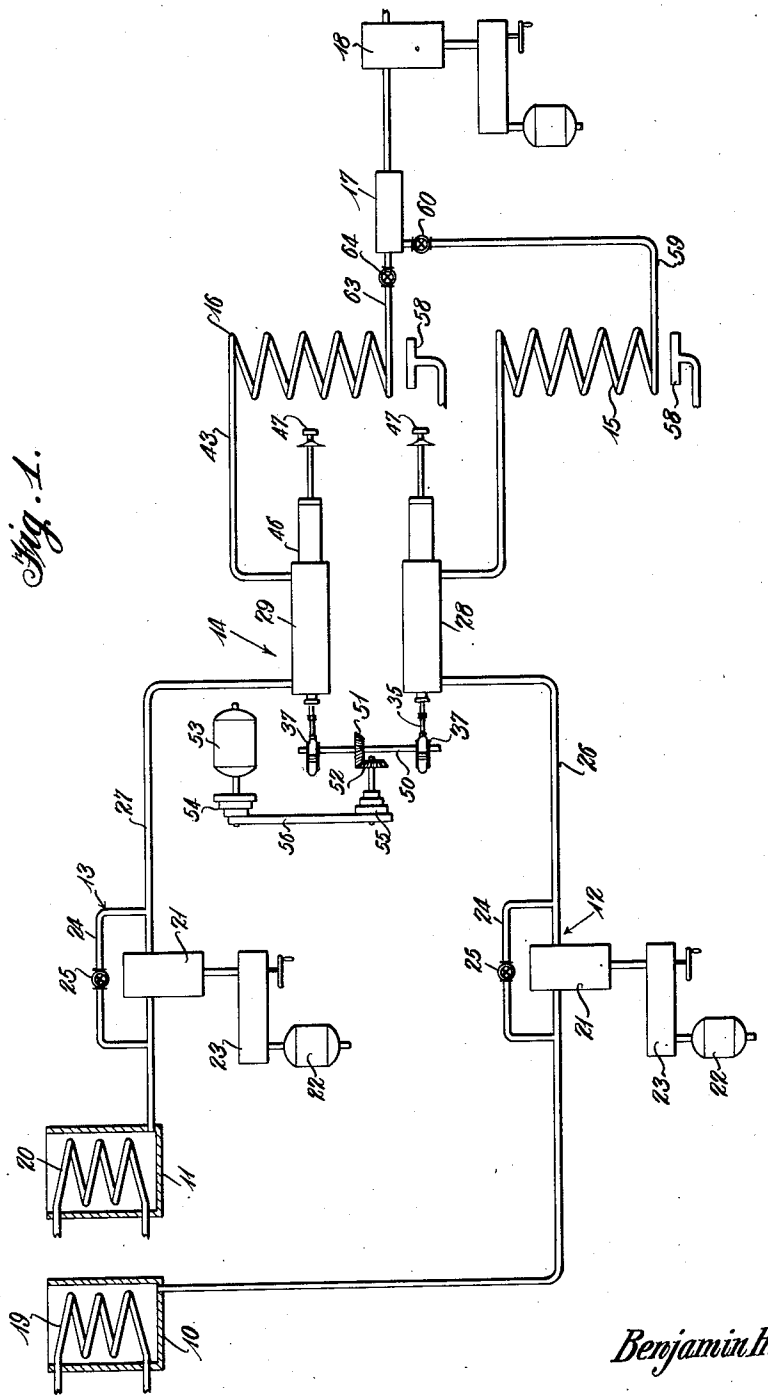

Inventor

Benjamin H. Thurman

By Harris, Keech, Foster & Harris

Attorneys

Dec. 27, 1938. B. H. THURMAN 2,142,062

PROPORTIONING APPARATUS

Filed Feb. 15, 1938 2 Sheets-Sheet 2

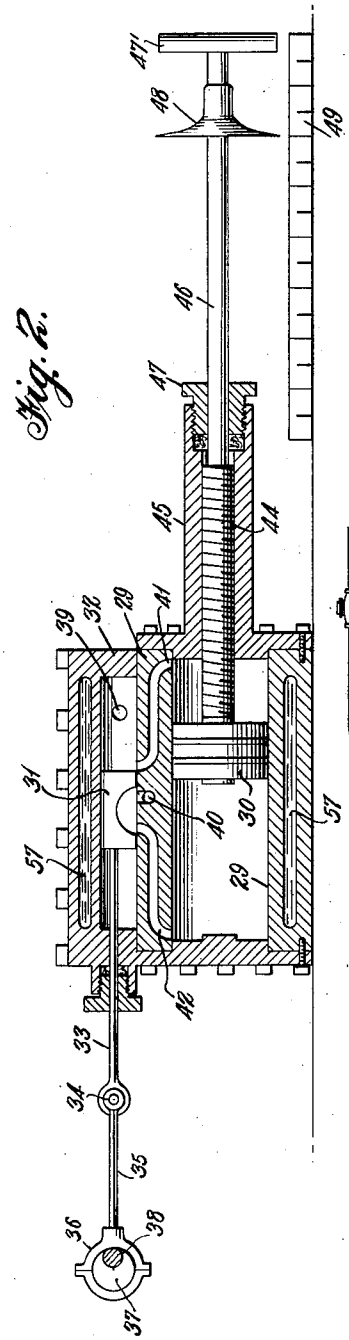

Fig. 2.

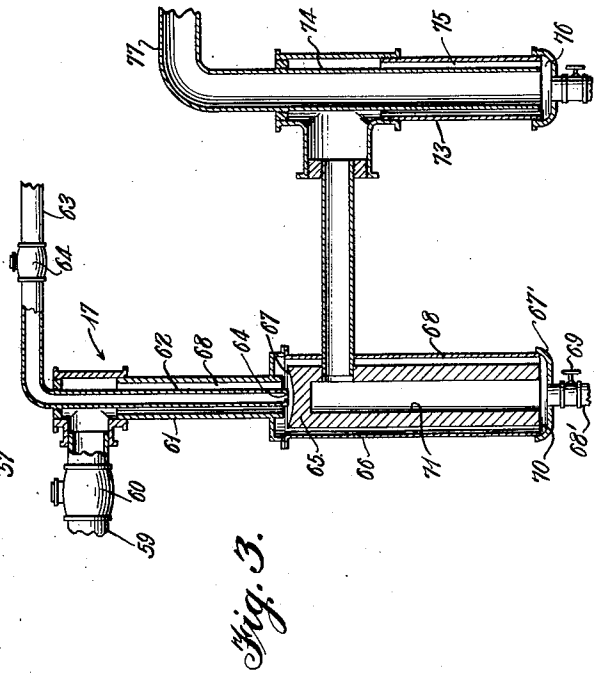

Fig. 3.

Inventor

Benjamin H. Thurman

By Harris, Kiech, Foster & Harris

Attorneys

Patented Dec. 27, 1938 2,142,062

UNITED STATES PATENT OFFICE

2,142,062

PROPORTIONING APPARATUS

Benjamin H. Thurman, Bronxville, N. Y., assignor to Refining, Inc., Reno, Nev., a corporation of Nevada

Application February 15, 1938, Serial No. 190,673

11 Claims. (Cl. 221—96)

This invention relates to a proportioning apparatus and more particularly to apparatus for accurately proportioning and mixing two or more streams of materials.

An object of the present invention is to provide an apparatus which will deliver accurately proportioned streams of materials to a mixing device.

Another object of the invention is to provide an apparatus by which two or more streams of materials may be extremely accurately measured and a thorough admixture of the two streams produced.

Another object of the invention is to provide an apparatus which concurrently delivers predetermined amounts of liquids as streams to a mixing device wherein the streams are mixed in flow to form a combined stream of the materials.

Another object of the invention is to provide a continuous proportioning and mixing apparatus in which streams of materials may be proportioned at a predetermined temperature and mixed at any other desired temperature during flow.

Another object of the invention is to provide a proportioning and mixing apparatus in which streams of materials to be mixed furnish power to the proportioning mechanism and in which sufficient pressure is maintained across said mechanism to insure accurate proportion.

A further object of the invention is to provide a proportioning mechanism having synchronously operating measuring devices so as to concurrently deliver materials to be mixed from said cylinders.

A still further object of the invention is to provide an improved flow mixing device in which the materials are thoroughly mixed by the movement of the materials through the mixing device.

Other objects and advantages of the invention will appear in the following description of a preferred embodiment of the apparatus shown in the attached drawings, of which:

Figure 1 is a diagrammatic view of the complete proportioning and mixing device,

Figure 2 is a vertical longitudinal cross section through a proportioning cylinder, and

Figure 3 is a vertical cross section through a mixing device in accordance with the present invention.

In many continuous processes, for example, continuous processes of refining animal and vegetable oils, continuous processes of making soap or other similar processes in which materials which react chemically with each other are mixed, it is extremely important that the materials entering the process be accurately measured and thoroughly admixed. For example, in making a substantially neutral soap, saponifiable materials, such as, glycerides, rosin or fatty acids and saponifying reagents, such as caustic soda, caustic potash or sodium carbonate, must be supplied in chemically equivalent quantities. They must also be thoroughly admixed so that the reaction can be rapidly carried to substantial completion. It is likewise important that the total amounts of materials, as well as the proportions thereof introduced into the processes, be maintained substantially constant so that temperatures, pressures, etc., in the remaining portions of the process can be maintained substantially constant. Also the measuring devices should be positive in action and should deliver the materials concurrently to the mixing device so that chemically equivalent amounts of the material enter the mixing device at the same time.

The present invention provides an apparatus by which such reacting materials may be proportioned with an accuracy not heretofore obtained and desired proportions of the materials to be mixed are delivered as streams to a mixing device where the materials are thoroughly admixed to form a combined stream, all at the expense of a minimum of power and out of contact with the atmosphere.

Referring to the drawings and more particularly to Figure 1, the apparatus of the present invention includes sources of supply for the materials entering the presses shown as tanks 10 and 11, pumping devices indicated generally at 12 and 13, respectively, for delivering the materials under pressure to a proportioning mechanism indicated generally at 14, heating devices shown as coils 15 and 16 for the proportioned materials, a mixing device indicated at 17 and a mixture pump 18.

The tanks 10 and 11 may be provided with heating coils 19 and 20 or other heat exchange devices for bringing the materials in the tanks to predetermined temperatures so that the proportioning of each material may be accomplished at a substantially uniform temperature. If the materials to be mixed are thick or viscous, the coils 19 and 20 may be employed to heat the viscous material to a predetermined temperature at which it is readily pumpable. The pumping devices 12 and 13 each include a pump 21 driven by an electric motor 22 or other suitable source of power through a variable speed device 23, which may be any conventional type of variable speed device, for example, one of the type having vari-

able diameter pulleys. The pumps 21 are preferably of the positive displacement type provided with by-passes 24 in which pressure release valves 25 are positioned so that the materials may be delivered through the pipes 26 and 27 to proportioning devices 28 and 29, respectively, at any desired pressure.

The construction of a proportioning device, for example, proportioning device 28, is shown somewhat diagrammatically in Figure 2. Such a proportioning device may include a cylinder 29 in which is positioned a free piston 30. The cylinder may be provided with a conventional D-valve 31 positioned in a housing 32 secured to the top of the cylinder 29. The D-valve may be reciprocated by means of a valve rod 33 pivotally connected at 34 to a connecting rod 35 secured to an eccentric strap 36 embracing an eccentric 37 secured to a shaft 38. The material to be measured may enter the valve housing 32 through a port 39 and be discharged from the port 40. It is apparent that the position of the valve shown will provide for entrance of the material into cylinder 29 from the port 39 through the port 41 and discharge of the material from the other end of the cylinder through the port 42 and port 40. By connecting the pipe 27 to the port 39, materials entering the cylinder 29 under pressure will force the piston 30 to the left in Figure 2 and discharge a measured amount of material through the port 40 which may be connected to the pipe 43 of Figure 1. Movement of the valve 31 to the right in Figure 2 will connect port 39 to port 42 and port 40 to port 41 so that materials under pressure enter the left end of the cylinder 29 and force the piston 30 to the right so as to discharge a measured quantity of material through the ports 41 and 40 to the pipes 43. Thus the rate of reciprocation of the valve 31 by the eccentric 37 determines the number of strokes made by the piston 30.

The length of the stroke of the piston 30 may be adjusted by means of a screw threaded member 44 extending into the cylinder 29 so as to operate as a stop for the piston 30. The screw threaded member 44 engages complemental threads in the cylinder head 45 and is provided with a portion 46 extending through a packing gland 47. The extending portion 46 may be provided with a hand-wheel 47 and an indicator 48 cooperating with a scale 49. By rotating the hand-wheel 47 the member 44 may be advanced into the cylinder 29 or retracted therefrom so as to adjust the stroke of the piston 30, the length of the stroke being indicated upon the scale 49. The proportioning device 28 may be similar to the proportioning device 29.

In accordance with the present invention the valves 31 of a plurality of proportioning devices are reciprocated by eccentrics 37 positioned upon the same shaft 50. The eccentrics 37 are preferably positioned upon the shaft 50 so that the valves 31 are operated synchronously and in phase. Thus the pistons 30 of each proportioning device are operated at the same time and in phase so that materials being measured are concurrently discharged from the respective proportioning devices 28 and 29. It is apparent that the eccentrics 37 may have the same angular position or may be disposed at an angle of 180° with respect to each other to produce synchronous discharge by the pistons 30.

The shaft 50 may be driven by any suitable variable speed device so that the frequency of the oscillations of the pistons may be controlled. The driving of the shaft 50 can be conveniently accomplished by placing a beveled gear 51 thereon so as to mesh with a beveled gear 52 driven from the motor 53 through step pulleys 54 and 55 connected to the motor 53 and beveled gear 52, respectively, and provided with a belt 56 operatively connecting the pulleys. The arrangement employing step pulleys has been found satisfactory in practice as finer gradations in the amount of material delivered by the proportioning devices can be obtained by adjusting the hand wheels 47 so as to adjust the stroke of the pistons 30. However, a continuously variable speed device may be employed instead of the step pulleys 54 and 55 if desired.

When proportioning thick or viscous materials it has been found that in many cases it is undesirable to heat such viscous materials much above the flow point before proportioning the same and that such materials tend to cool in the proportioning devices causing difficult operation thereof. By providing a proportioning device which handles such viscous material with a heating jacket 57, which heating jacket may be cast integrally into the cylinder 29 and the valve housing 32, cooling of materials within the proportioning device can be prevented. Also by employing such heating jackets a substantially constant temperature of the materials can be maintained in the proportioning device thus producing more uniform proportioning.

Many materials, for example, caustic alkalies or fatty acids, particularly at elevated temperatures, cause rapid wear of the proportioning device and particularly the valve 31. It has been found that this can be prevented by hardening the wearing surfaces of the proportioning device and particularly the surfaces of valve 31 and the surfaces upon which it bears. Thus the process known commercially as "Steeliting" has been employed to successfully prevent such wearing and resulting leakage when handling corrosive materials.

Also in many cases it has been found desirable to mix the materials in the process at a considerably higher temperature than is practical to employ during proportioning, in order to obtain a thorough admixture and rapid reaction between the materials being mixed. Thus heating devices, such as coils 15 and 16, provided with any suitable heating means such as burners 58 for burning liquid or gaseous fuel may be employed for increasing the temperature of the materials to be mixed. It is apparent that one material only can be heated or if no elevation of temperature is required the heating devices may be omitted.

For successful operation of such continuous processes as above mentioned, the mixing of the materials must be rapid and thorough. The flow mixing device shown in Figure 3 has been found to be extremely efficient, particularly when at least one of the materials is viscous. Preferably the more viscous material is delivered through a pipe 59 provided with a check valve 60 into a tube 61 in which is concentrically positioned a smaller tube 62. The less viscous material is delivered into the smaller tube 62 through a pipe 63 provided with a check valve 64 and is discharged through an orifice 64 against a concave member 65 positioned in the enlarged tubular member 66. The less viscous material is spread into a thin film on the concave surface 67 of the member 65 and is injected at right angles into a thin annular stream of the more viscous materials flowing downwardly in the space 68 between the tubes 61 and 62. The two materials are therein

effectively commingled and flow downwardly in the annular space 68 between the member 65 and the large tubular member 66. The latter member is closed at its lower end by a cap 67' provided with a drain 68' having a valve 69 which is closed during normal operation. The mixed materials are forced inwardly through the restricted annular gap 70 wherein further mixing takes place and then flow upwardly through a port 71 in the member 65 and are discharged. One or more further mixing devices similar to that formed by the members 65 and 66 may be employed, if desired, to further mix the materials. Thus the stream from the first mixing device may be introduced into a tube 73 in which another tube 74 is concurrently positioned such that the materials flow downwardly in the space 75 between the tubes 73 and 74 and through a restricted annular gap 76 formed between the tube 74 and the closed end of the tube 73. The mixture may then flow upwardly through the tube 74 and be discharged through a pipe 77. The mixture may then be subjected to further temperature treatment, vacuum distillation or any other step required by the particular process being carried on.

By the apparatus of the present invention, substantially continuous streams of materials can be delivered to the mixing device at any desired temperature. By employing a relatively short stroke in the proportioning device and operating them at relatively high speed pulsations in the streams of materials delivered to the mixing device can be minimized. However, such pulsations do not deleteriously affect the degree of mixing in the mixing device as the pulsations in the respective pipes leading to the mixing devices are in synchronism and materials are always concurrently delivered to the mixing devices. By employing pumps 21 with by-passes 24 along with pump 16 for the mixture leaving the mixer 17, a substantially constant predetermined pressure drop may be maintained across each of the proportioning devices 28 and 29 and the mixer 17 such that the amounts of materials being mixed are accurately proportioned and mixed in predetermined amounts and proportions. It will be appreciated that a pressure drop must exist both across the proportioning device and the mixer 17 in order to cause proper operation of these devices but it has been found that the proportioning devices and mixer 17 operate extremely efficiently at relatively small pressure drops. Any suitable temperatures for proportioning and mixing may be independently employed and the relatively thorough and uniform admixture at the point of contact of the two materials in the mixer 17 prevents the forming of viscous masses of reacted materials with unreacted materials included therein due to excesses of one material over the other. The particular mixing device disclosed has been found to require less pressure drop when employed with the proportioning mechanism disclosed than other types of flow mixtures but it is apparent that with materials which are fluid or extremely miscible with each other, other types of flow mixers, for example, the mere injection of a stream of material at right angles into a stream of the other material may be employed.

Although only two proportioning devices have been disclosed, it is apparent that additional similar devices may be employed, all having valve actuating eccentrics 37 positioned upon the same shaft or synchronously driven shafts.

While I have disclosed the preferred embodiments of my invention it is understood that the details thereof may be varied within the scope of the following claims.

What I claim is:

1. A proportioning apparatus, which comprises: a plurality of measuring devices; means for forcing a separate stream of material to be measured through each of said devices; each of said devices having a movable member actuated by flow of materials therethrough for delivering measured amounts of material from said device, and valve means for said fluid for controlling the actuation of said member; and common means independent of the movement of said members of any of said devices for actuating the valve means for all of said devices.

2. In a device for proportioning a plurality of fluid streams; a measuring device for each of said streams; each of said measuring devices having a movable element actuated by fluid entering said device for forcing measured quantities of fluid from said device, and valve means for controlling the actuation of said element by said fluid; and common means independent of the movement of said element of any of said devices for actuating the valve means for all of said devices.

3. Apparatus for proportioning streams of fluid materials; which comprises, a plurality of fluid measuring devices; means for forcing a stream of fluid to be measured through each of said devices; each of said devices having plungers actuated by the fluid to be measured for forcing measured quantities of material from said device, and valve means for controlling said fluid to cause repeated actuation of said plunger by said fluid; and means independent of said plungers for actuating said valve means of all of said devices in synchronism.

4. Proportioning apparatus comprising a plurality of measuring devices each having an inlet and outlet port; means for delivering a stream of fluid under pressure to the inlet port of each of said devices; each of said devices having a cylinder provided with a free piston positioned therein and valve means for alternately connecting the inlet and outlet port thereof to opposite ends of said cylinder to cause said piston to force measured amounts of fluid from said cylinder; and common means independent of the pistons of said devices for actuating the valve means of all of said devices.

5. Proportioning apparatus comprising a plurality of measuring devices each having an inlet and outlet port; means for delivering a stream of fluid under pressure to the inlet port of each of said devices, each of said devices having a cylinder provided with a free piston positioned therein and valve means for alternately connecting the inlet and outlet port thereof to opposite ends of said cylinder to cause said piston to force a measured amount of fluid from said cylinder; and means independent of the pistons of said devices for synchronously actuating the valve means of all of said devices.

6. Proportioning apparatus comprising a plurality of measuring devices; means for delivering a stream of fluid under pressure to each of said measuring devices; each of said measuring devices being provided with a cylinder having a free piston contained therein, valve means for alternately introducing fluid into opposite ends of said cylinder to cause said piston to force measured amounts of fluid from said cylinder and means for independently varying the stroke of each of said pistons; and means for synchro-

nously actuating the valve means of all of said cylinders.

7. Apparatus for proportioning streams of fluid, which comprises: a plurality of measuring devices; means for flowing a stream of fluid under pressure through each of said measuring devices; each of said devices being provided with a movable member actuated by fluid flowing through said device to force measured quantities of said fluid from said measuring device, valve means for controlling said fluid to cause repeated actuation of said movable member and means for independently controlling the degree of movement of said movable member of each device to determine the size of each measured quantity of fluid; and means for operating the valve means of said measuring devices in synchronism.

8. Apparatus for proportioning and mixing streams of fluid, which comprises: a plurality of measuring devices each including a movable measuring element operated by fluid flowing therethrough; pump means for forcing a stream of material through each of said devices; valve means for the materials flowing through each of said devices for controlling the operation of the elements of each of said devices; means independent of said elements for operating said valve means in synchronism to deliver measured streams from said devices; means for independently adjusting said measuring devices to determine the amount of material passed therethrough; and means for injecting the measured stream of one of said fluids into a measured stream of another of said fluids.

9. Apparatus for proportioning and mixing streams of fluid materials, which comprises: a plurality of measuring devices operated by materials flowing therethrough for delivering measured increments of fluid materials; means for forcing a stream of materials through each of said measuring devices; a mixing device connected to said measuring devices including means for forming a thin annular stream of one of said materials and means for forming a second stream of another of said materials within said annular stream and forcing said second stream outwardly as a thin film into said thin annular stream; and means for operating said measuring devices in synchronism whereby measured increments of said materials are concurrently delivered to said mixing device and brought together during advancement of both streams of material.

10. Apparatus for mixing fluids, which comprises: means for forming a thin annular stream of one of said fluids; means for forming a stream of another fluid within said annular stream; and means for forcing said inner stream outwardly as a thin annular film into said annular stream so as to mix said streams.

11. Apparatus for mixing fluids, which comprises: means for forming a thin annular stream of one of said fluids; means for forming a stream of another fluid within said annular stream; means for forcing said inner stream outwardly as a thin annular film into said annular stream so as mix said fluids; means providing an annular orifice and means for delivering the resulting mixture inwardly through said annular orifice to further mix said fluids.

BENJAMIN H. THURMAN.