F. L. DYER.

ASSEMBLY VOTING MACHINE.

APPLICATION FILED FEB. 2, 1915.

**1,230,880.**

Patented June 26, 1917.

3 SHEETS—SHEET 1.

Fig. 1

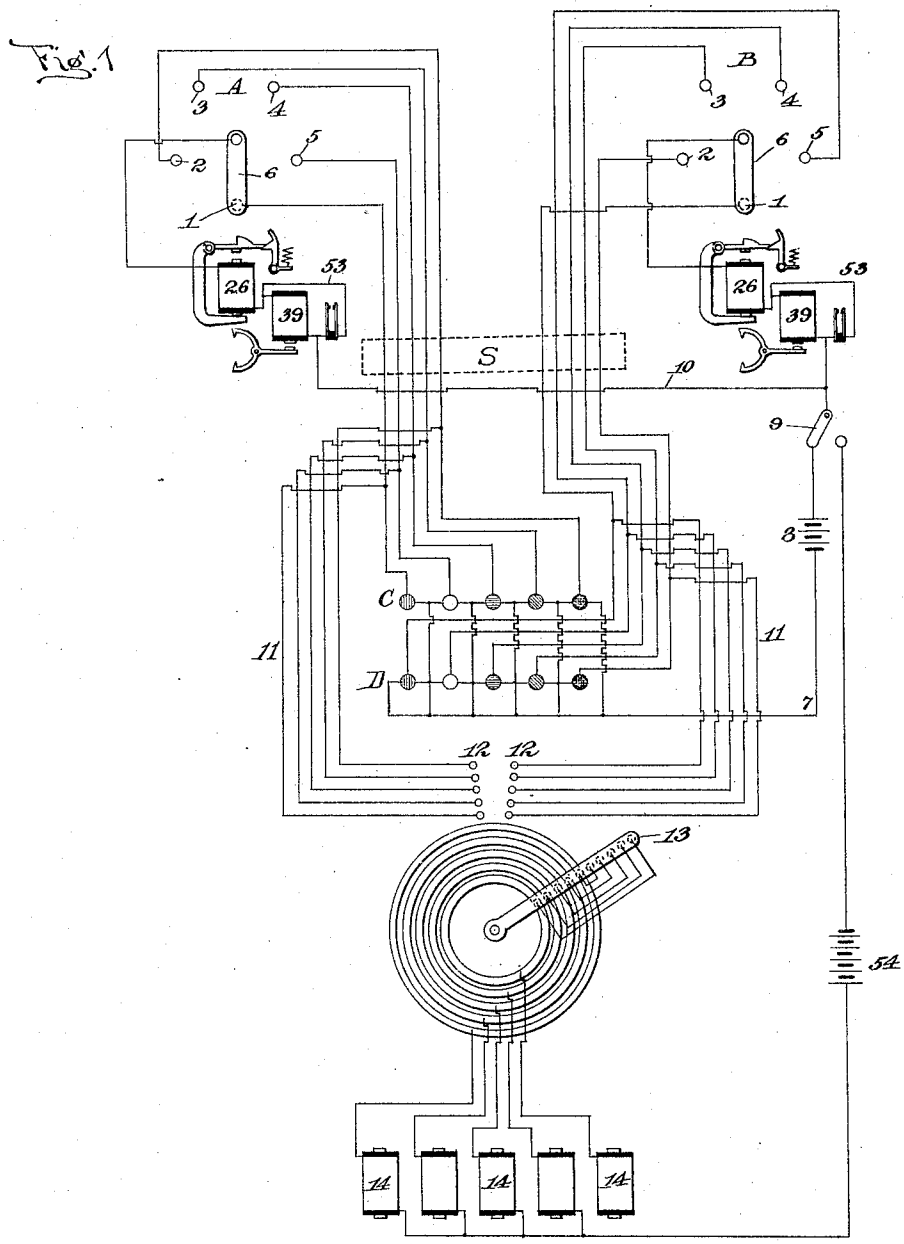


**Witnesses:**

Anna A. Sutton

Harry Foot

**Inventor**

Frank L. Dyer

THE NORRIS PETERS CO., PHOTO-LITHO., WASHINGTON, D. C.

F. L. DYER.

ASSEMBLY VOTING MACHINE.

APPLICATION FILED FEB. 2, 1915.

**1,230,880.**

Patented June 26, 1917.

3 SHEETS—SHEET 2.

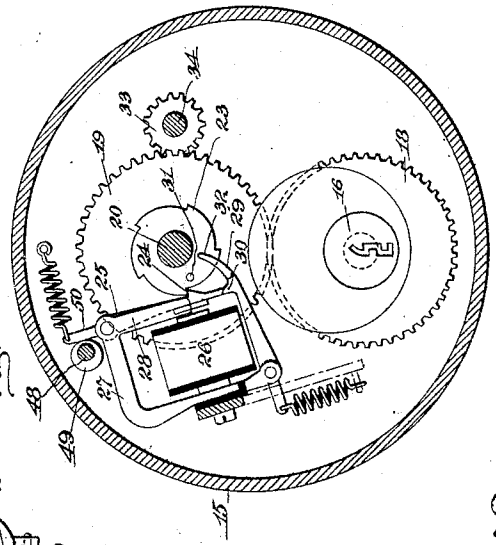

Fig. 5.

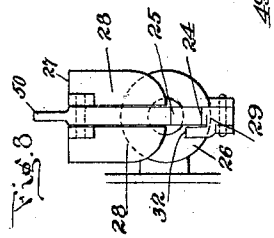

Fig. 8.

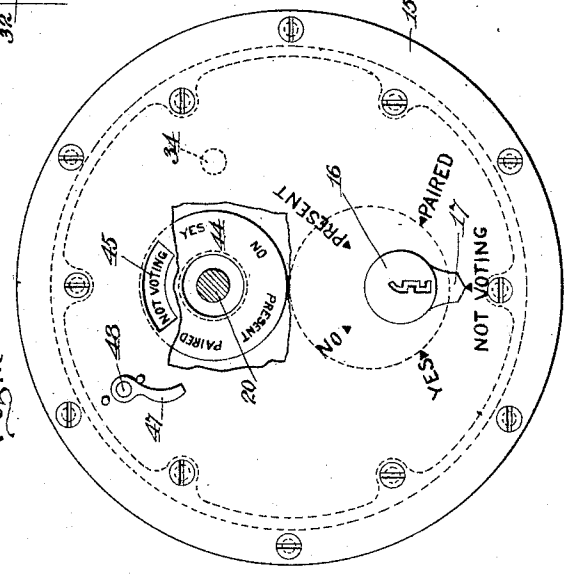


Fig. 2.

Fig. 9.

| | | | | | |
|---|---|---|---|---|---|
| DEMOCRATIC | | | | | |
| | Abbott | X | | | |
| | Allan | | | | |
| | Bennett | X | | | |
| | Bogle | X | | | |
| REPUBLICAN | | | | | |
| | Amos | | X | X | |
| | Andrews | | X | | |
| | Baxtes | | X | X | |
| | Cole | | | | |
| SOCIALIST | | | | | |
| | London | X | | | |

**Witnesses:**

Anna E. Fenton

Harry Foot

**Inventor**

Frank L. Dyer

THE NORRIS PETERS CO., PHOTO-LITHO., WASHINGTON, D. C.

F. L. DYER.

ASSEMBLY VOTING MACHINE.

APPLICATION FILED FEB. 2, 1915.

**1,230,880.**

Patented June 26, 1917.

3 SHEETS—SHEET 3.

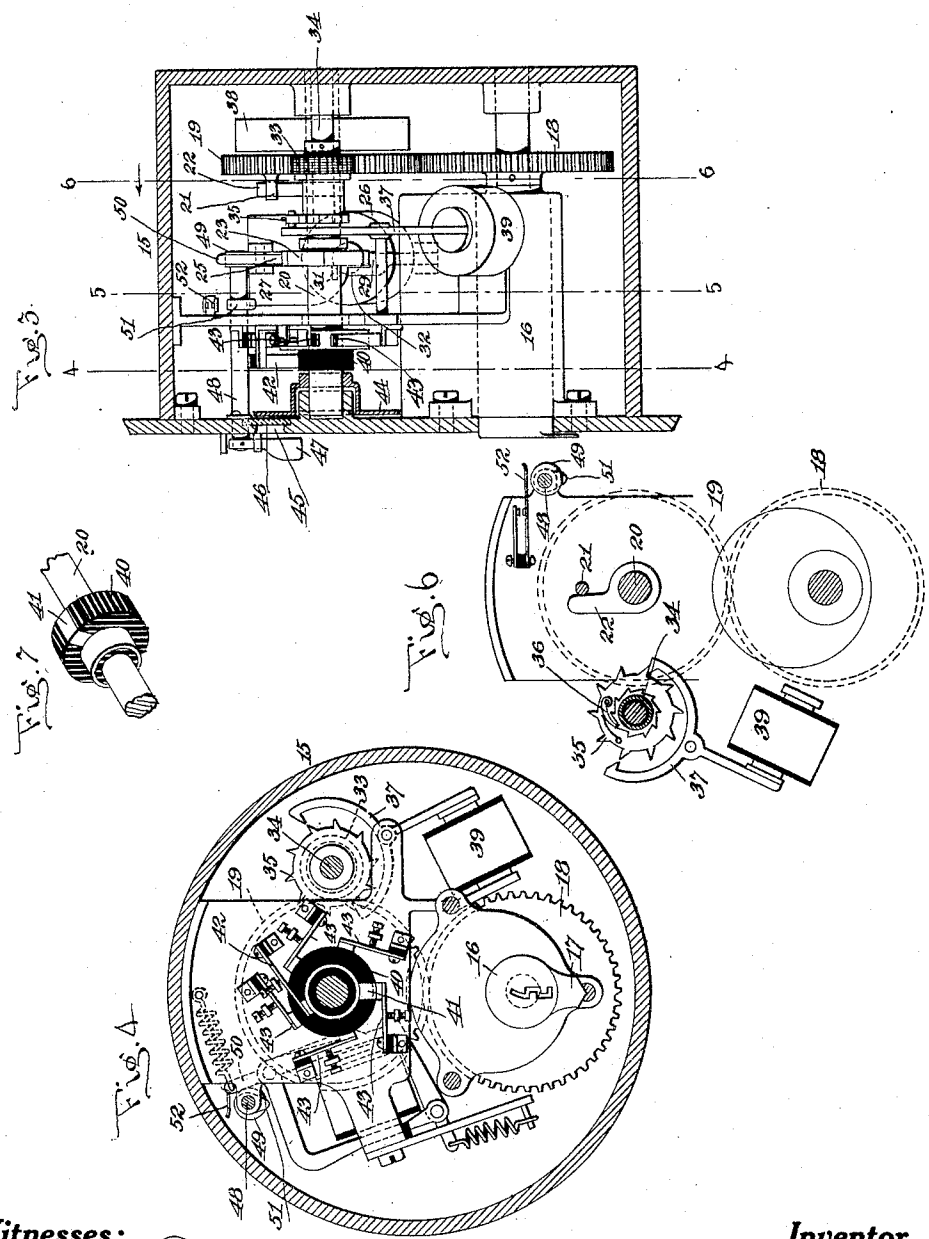


**Witnesses:**

Anna E. Renton

Harry Gost

**Inventor**

Frank L. Dyer

THE NORRIS PETERS CO., PHOTO-LITHO., WASHINGTON, D. C.

# UNITED STATES PATENT OFFICE.

FRANK L. DYER, OF MONTCLAIR, NEW JERSEY.

## ASSEMBLY VOTING-MACHINE.

1,230,880. Specification of Letters Patent. Patented June 26, 1917.

Application filed February 2, 1915. Serial No. 5,601.

*To all whom it may concern:*

Be it known that I, FRANK L. DYER, a citizen of the United States, and a resident of Montclair, county of Essex, and State of New Jersey, have invented a certain new and useful Improvement in Assembly Voting-Machines, of which the following is a specification.

My invention relates to improvements in assembly voting machines of the type disclosed and claimed by me in Patent No. 701,314, dated June 3, 1902, and by means of which I enlarge the scope and improve the operation of the apparatus.

With the apparatus disclosed in my patent I made use of a transmitter located at each member's desk, or adjacent to his seat, by means of which one or the other of two circuits could be closed corresponding to the two votes "Yes" or "No". To prevent improper or fraudulent voting I constructed each transmitter so that it could only be operated by a special key. The registering apparatus of the machine shown in my patent comprised a printing device employing two rows of printing plates corresponding to the members' names alphabetically arranged. A number of contact plates were employed with respect to which a contact device was moved at a speed corresponding to the movement of the type carrier, so that when the contact device reached the series of plates corresponding with the transmitter of a particular member, that member's name will be in printing position. I made use of two printing frames adapted to engage the paper with one or the other of the printing plates, so that the member's name will be printed on the "yes" list or "no" list, according to the vote. These printing frames were actuated by a reciprocating tongue which, by means of a polarized magnet, was moved to one side or the other to engage the desired printing frame. The closing of the circuit at the receiving device acted to send a return signal to the transmitter by which the member would know that his vote had been received. With the patented apparatus I also made use of a totalizing device to totalize the individual affirmative and negative votes.

My present invention is a further improvement on the device of my patent in two essential respects, viz:

First: I have so modified the apparatus that without departing from the principles of the patented machine it will result in the production of five complete lists of names, alphabetically arranged, corresponding, first, to those voting affirmatively, second, to those voting negatively, third, to those voting "Present", fourth, to those voting "Paired", and finally to those not voting at all, thus taking care of the entire membership of the legislative body.

Second: I provide the apparatus with one or more charts or indicators, each comprising a complete list of the names of all of the members, and with indicating devices by which simultaneously with the actuation of each transmitter a signal will be sent to each chart or indicator indicating the manner in which the member is voting. Such charts or indicators may be conveniently located on the desks of the majority and minority leaders of the assembly, or located in the cloak room or elsewhere, or they may be made large enough so that when placed on the wall of the legislative chamber they may be observed by all the members, who will be informed how each member is voting. Of course, the apparatus is of such a character that before a vote has been recorded and totalized it may be changed by the member.

As a practical matter I prefer to arrange the names of the members on each chart or indicator according to the several political parties, the members of one political party being grouped alphabetically and those of the opposing or other political parties being correspondingly grouped alphabetically. Therefore, when the members have voted, the leader of any particular party may observe at a glance whether his followers are voting with the party or not, with the possibility that before the vote is recorded and totalized any member not voting with his party may be persuaded to change his vote. It will, of course, be understood, however, that the names on each chart or indicator may be arranged alphabetically as a whole without respect to parties.

In order that the invention may be better understood attention is directed to the accompanying drawings, forming part of this specification, in which:

Figure 1 is a diagrammatic view showing two of the transmitters and also two of the signals corresponding to these transmitting stations on one of the charts, and such of the recording apparatus as is necessary to take care of the two transmitters shown.

For sake of clearness I have not illustrated the totalizers, which are preferably arranged, as disclosed in my patent, so as to be actuated concurrently with the printing operation;

Fig. 2 is a front view of one of the transmitting stations showing the front broken away to disclose the indicator disk;

Fig. 3 is a longitudinal sectional view of Fig. 2;

Fig. 4 is a section on the line 4, 4 of Fig. 3;

Fig. 5 is a section on the line 5, 5 of Fig. 3;

Fig. 6 is a section on the line 6, 6 of Fig. 3, the view being taken in the direction of the arrow looking toward the front of the transmitter;

Fig 7 is a detail perspective view showing the contact disk in the transmitter;

Fig. 8 is a front view of one of the polarized magnets preferably used in the transmitter, and Fig. 9 a plan view of a portion of one of the charts or indicators illustrating its division in three alphabetical groups each representing a political party.

In the above views corresponding parts are represented by the same reference numerals.

Attention is first directed to the diagram which, while not showing all the circuits, is sufficiently full to illustrate the principle of the invention. It shows two transmitting stations A and B, corresponding to two members. Of course, with a body as large as the National House of Representatives there would be over four hundred of these stations, each located adjacent to the member's seat.

I show at each station five contacts, 1, 2, 3, 4 and 5, corresponding to "Not voting," "Aye," "No," "Present" and "Paired." I show a contact arm 6 normally on the contact 1 but adapted to be moved successively into engagement with any one of the other contacts and be locked in such position.

For the purpose of clearness the diagram shows a contact arm 6 which moves into engagement with successive contact plates, but with the actual device, as will be presently described, I make use of five contact arms with which a single contact plate is adapted to successively engage. The circuits from the contact plates 1 to 5, respectively, at the station A, lead to a line of indicators C, and the corresponding circuits at the station B lead to a line of indicators D. These indicators are preferably small electric lamps and there is a common return circuit 7 to the source of supply 8. The indicators C and D comprise the chart or indicator referred to, any number of which may be used, and in practice each line of indicators C, D, etc., will be marked with the member's name. Preferably if lamps are used they will be of different colors, for instance, those in the first row corresponding to the different members' names will be red lights, those in the second row white lights, those in the third row blue lights, those in the fourth row green lights, and those in the fifth row, yellow lights.

A portion of one of these charts is shown in Fig. 9 where three alphabetical groups are shown each representing a political party and in which the colored lights indicating the individual votes are represented by X.

The switch 9 is adapted to close a circuit from a common return 10 from all of the transmitter stations to the source of current 8. Therefore, when this switch is in the position shown in Fig. 1 the red lights corresponding to all the stations will be illuminated. If a member at station A, for example, votes affirmatively the white light on the corresponding indicator will be illuminated. Thus the indicators will give an immediate visual indication of each vote. Leading off from the circuits from each indicator are circuits 11 extending to the contact plates 12 of the recording apparatus. A contact device 13 sweeps across the circuits 12 as disclosed in my said patent. Instead of using two printing frames to print two lists of votes, I make use of five printing frames, printing five lists of votes, and each printing frame is controlled by a magnet 14 which will be selected by the member at his transmitting station, so that the name will be printed in the desired list. The arrangement shown in Fig. 1, therefore, is identical, except as to details, with the general system shown in my patent, with the exception that I illustrate an indicating device or chart to indicate visually how each member is voting, and I also show five controlling magnets instead of two controlling magnets, or a single polarized magnet for controlling two printing frames, so that I print five complete lists instead of two lists as disclosed in my said patent.

Referring now to Figs. 2 to 8 inclusive, 15 represents a casing containing the transmitting devices. Mounted therein is a lock barrel 16, preferably a Yale lock, carrying a pointer 17 adapted to move with respect to the indications "Not voting," "Yes," "No," "Present" and "Paired" appearing on the face of the casing so as to guide the member in determining how far to turn the lock barrel to vote as he desires. The lock barrel carries a gear 18 on its inner end which meshes with a gear 19 loosely mounted on the shaft 20. The gear 19 carries a pin 21 which engages with an arm 22, so that when the lock barrel is turned in one direction the pin engaging the arm 22 will move the shaft 20 for a part of a revolution, but when the lock barrel is moved in the opposite direction to withdraw the key, the

pin 21 will move away from the arm 22 so as to leave the shaft 20 in its locked position. The shaft 20 carries a toothed wheel 23 having five teeth (see Fig. 5) corresponding to the five positions, and with which the tooth 24 on the armature 25 of a polarized magnet 26 engages. The polarized magnet 26 is provided with a yoke 27 having forwardly extending pole pieces 28 between which the armature 25 is mounted, as shown in Fig. 8, so that the armature will be polarized and hence will respond to currents of one polarity, but not to currents of the opposite polarity. Coöperating with each armature is a latch 29 having a finger 30 so arranged that when the armature 25 is attracted to withdraw the tooth 24 from one of the teeth of the toothed wheel 23 the armature will be locked behind the finger 30 so as to hold the tooth 24 away from the toothed wheel and therefore permit the toothed wheel to move to the return position. A pin 31 on the toothed wheel 23 engages the tail 32 of the latch 29, so as to force the latch downwardly just as the toothed wheel approaches its backward position, so as to withdraw the finger 30 from the end of the armature 25 and permit the armature to again be moved with the tooth 24 in engagement with the first tooth of the toothed wheel 23, corresponding to the "Not voting" position.

The gear 19 engages a pinion 33 mounted on a shaft 34 and adapted to drive an escape wheel 35 through a ratchet and pawl 36, as shown in Fig. 6. The parts are so arranged that when the lock barrel is turned to move the shaft 20 into the desired voting position the gear 19 rotating the pinion 33 will move the pawl with respect to the ratchet so as not to turn the escape wheel 35. When, however, the shaft 20 is released, as will be explained, the pawl will engage the ratchet and the escape wheel will be turned, operating the escapement 37 and causing the return movement of the shaft 20 to be retarded, permitting of a gradual return of the parts to their original position.

A spring 38 on the shaft 20 is wound up when the shaft is advanced, and its tension returns the shaft to its normal position when the shaft is released. The tail of the escapement 37 works in close proximity to a brake magnet 39, so that when the magnet is energized it will lock the escapement and prevent the parts from moving. When, however, the magnet is not energized, the escapement can vibrate freely to allow the parts to slowly return to their original position. The magnets 26 and 39 at each transmitting station are arranged in series, as shown in Fig. 1.

On the shaft 20 is an insulating disk 40 carrying a single contact 41, which is connected to a collecting ring (see Fig. 7) with which a brush 42 engages to close the circuit to the contact 41. Engaging the periphery of the disk 40 are five contacts 43, each carried on springs as shown, and with which the contact piece 41 is adapted to successively make contact. These contacts 43 correspond to the contacts 1, 2, 3, 4 and 5 of Fig. 1, and the contact 41 corresponds to contact 6 of Fig. 1. At the front of the shaft 20 is a disk 44 carrying the representations "Not voting," "Yes," "No," "Present" and "Paired," one of which indications will be observed through an opening 45 in front of the casing, covered by a glass window 46, confirming the vote that the member desires to transmit.

In order to re-set the apparatus so as to permit a correction in the vote, I show a small lever 47 on the front of the casing, mounted on a shaft 48. This lever is provided with a cam 49 which engages the tail 50 of the armature 25, so that when the lever 47 is operated it will withdraw the tooth 24 from the toothed wheel 23 and thereby release the toothed wheel so as to permit the shaft 20 to return to its original position. The shaft 48 is also provided with a cam 51 engaging a circuit spring 52 so as to close a circuit 53 (see Fig. 1), to thereby short-circuit the brake magnet 39. To actuate the printing or recording device, or rather to energize the desired selecting magnet 14 which selects the proper printing frame to print the member's name in the desired list, I use a battery or other source of supply 54, with which the switch 9 coöperates. As shown, the two sources of supply are arranged with opposite polarities presented to the polarized magnets 26 so that when the current from the battery 8 flows through the magnet 26 the armature 25 will not be attracted, but will be free to engage the toothed wheel 23 to lock the same in any desired position. After all the members have voted and the switch 9 is moved to the other contact so as to connect the battery 54 with the transmitting stations, the current from the battery 54 will energize the polarized magnets 26 so as to attract the armature when the current collecting device 13 reaches the desired set of plates 12 corresponding to each station. In operation, when a member desires to vote he inserts his key in the lock 16 and turns it to the required position. If he votes "Yes" the second tooth of the disk 23 will lock the shaft 20 in that position with the word "Yes" disclosed in the opening 45. If he votes "No" the toothed disk will be locked in the next position, and so on, this locking being effected by the tooth 24 on the armature 25 engaging the tooth of the disk and preventing return movement of the disk. The contact device 41 will be brought beneath and locked in contact with one or the other of the contacts 43, to there-

by close the circuit to the particular one of the indicating devices C on each of the charts or indicators, thereby visually indicating the vote which the particular member intends to have recorded. If the member desires to change his vote he actuates the small lever 47 and the cam 49 withdraws the tooth 24 of the armature 25 away from the toothed disk 23, so as to release the shaft 20. The spring 38 returns the shaft to its normal position, a stop (not shown) limiting this movement.

In order to prevent the braking magnet 39 from locking the shaft 20 during the resetting operation, at a midway position when the contact 41 passes into engagement with one of the contact springs 43, I use the cam 51, actuating the contacts 52 so as to short-circuit the braking magnet during this return movement. After all the members have voted the switch 9 is operated so as to cut out all the indicators and connect the transmitting stations with the receiving device. When the collecting device 13 of the receiver engages the line of contact plates 12 corresponding with any particular transmitter it closes the circuit to the desired selecting magnet 14, which determines the particular list in which the member's name is to be printed. The closing of this circuit energizes the magnet 26 and withdraws the tooth 24 from the toothed wheel 23, and the magnet 26 will be locked in its withdrawn position by the tooth 30 of the latch 29. The shaft, however, will not immediately return because the brake magnet 39 will be energized and the escapement 37 will hold the shaft 20 from rotating. When, however, the contact device 13 has passed out of contact with the line of contact plates corresponding to the particular transmitting station under consideration, so as to break the circuit to the magnet 39 and thereby free the shaft 20, the spring 38 will return the shaft slowly to its original position. Near the end of this movement the pin 31 engages the tail 32 of the latch 29 so as to free the armature 25, which will again be moved in contact with the toothed wheel 23 ready for the next operation. The return of the shaft 20 to its original position will bring the words "Not voting" opposite the opening 45, so that the member will know that his vote has been received. It will be observed that if a member does not vote, so that the apparatus will not be actuated, the tooth 24 will remain in engagement with the first tooth of the wheel 23, and the contact 41 will remain in engagement with the lower contact 43, in circuit with the particular selector magnet 14 corresponding with the "Not voting" list, so that the member's name will be printed in the list of "Not voting".

As a matter of practical convenience, I prefer to equip the apparatus with a switchboard (not shown) somewhat like the switchboard of a telephone exchange, located in the circuits leading to the indicators C, D, etc., and the recording device, for instance, in the position S in dotted lines, Fig. 1. The circuits leading from each transmitter will be carried in a flexible connection at the switchboard, provided with a five circuit jack-switch as in telephone practice and the circuits leading to the indicators and recording device will extend from the switchboard so that any desired jack-switch may make contact with the circuits leading to any particular set of indicating devices and the corresponding set of contact plates of the recording mechanism. In this way, should any member change his seat or desk, his transmitter can be readily connected to the circuits corresponding to his indicating devices and to his position on the recording device, without a general upsetting of the circuit connections as would otherwise be the case.

Having now described my invention, what I claim as new and desire to secure by Letters Patent, is:

1. In an assembly voting machine, a plurality of transmitters, a single recording device arranged to make a record determined by the position of the several transmitters, a chart connected with the several transmitters, designed to give a visual indication of the vote before the same is recorded, and a single switch for simultaneously connecting or disconnecting all the transmitting stations with the said chart, substantially as set forth.

2. In an assembly voting machine, a plurality of transmitters, a single recording device arranged to make a record determined by the position of the several transmitters, a chart connected with the several transmitters, designed to give a visual indication of the vote before the same is recorded, and a single switch for simultaneously connecting or disconnecting all the transmitting stations with the said chart, and for simultaneously connecting all the transmitting stations in operative relation to the recording device, substantially as set forth.

3. In an assembly voting apparatus of the type described, a recording device, a transmitting apparatus adapted to close any one of successive circuits by a single movement in one direction, means for locking the transmitting device in its set position, and means for releasing the same simultaneously with the recording of the vote, substantially as set forth.

4. In an assembly voting apparatus of the type described, a recording device, a transmitting apparatus having a contact device adapted to close any one of successive circuits by a single movement in one direction, means for locking the contact device in its

set position, means for releasing the same simultaneously with the recording of the vote, and means for retarding the return movement of the contact device, substantially as set forth.

5. In an assembly voting apparatus of the type described, a recording device, a transmitting apparatus adapted to close any one of successive circuits by a single movement in one direction, means for locking the transmitting device in its set position, and means for sending a return signal to the transmitting device, simultaneously with the recording of the vote, substantially as set forth.

6. In assembly voting apparatus of the type described, a transmitter adapted to close any one of successive circuits, a polarized magnet controlling the release of the circuit closing device, a chart for giving a visual indication of the vote, a recording apparatus, and a source of polarized current whereby when the chart is in circuit with the polarized magnet the latter is inoperative and when the circuit to the recording apparatus is closed through the polarized magnet the latter will be operated to release the circuit closing device, substantially as set forth.

This specification signed and witnessed this 30th day of January, 1915.

FRANK L. DYER.

Witnesses:

ANNA E. RENTON,

HARRY PFOST.

**Copies of this patent may be obtained for five cents each, by addressing the "Commissioner of Patents, Washington, D. C."**