No. 680,652.

Patented Aug. 13, 1901.

L. L. ELDEN.

CIRCUIT BREAKER.

(Application filed Nov. 8, 1897.)

(No Model.)

3 Sheets—Sheet 1.

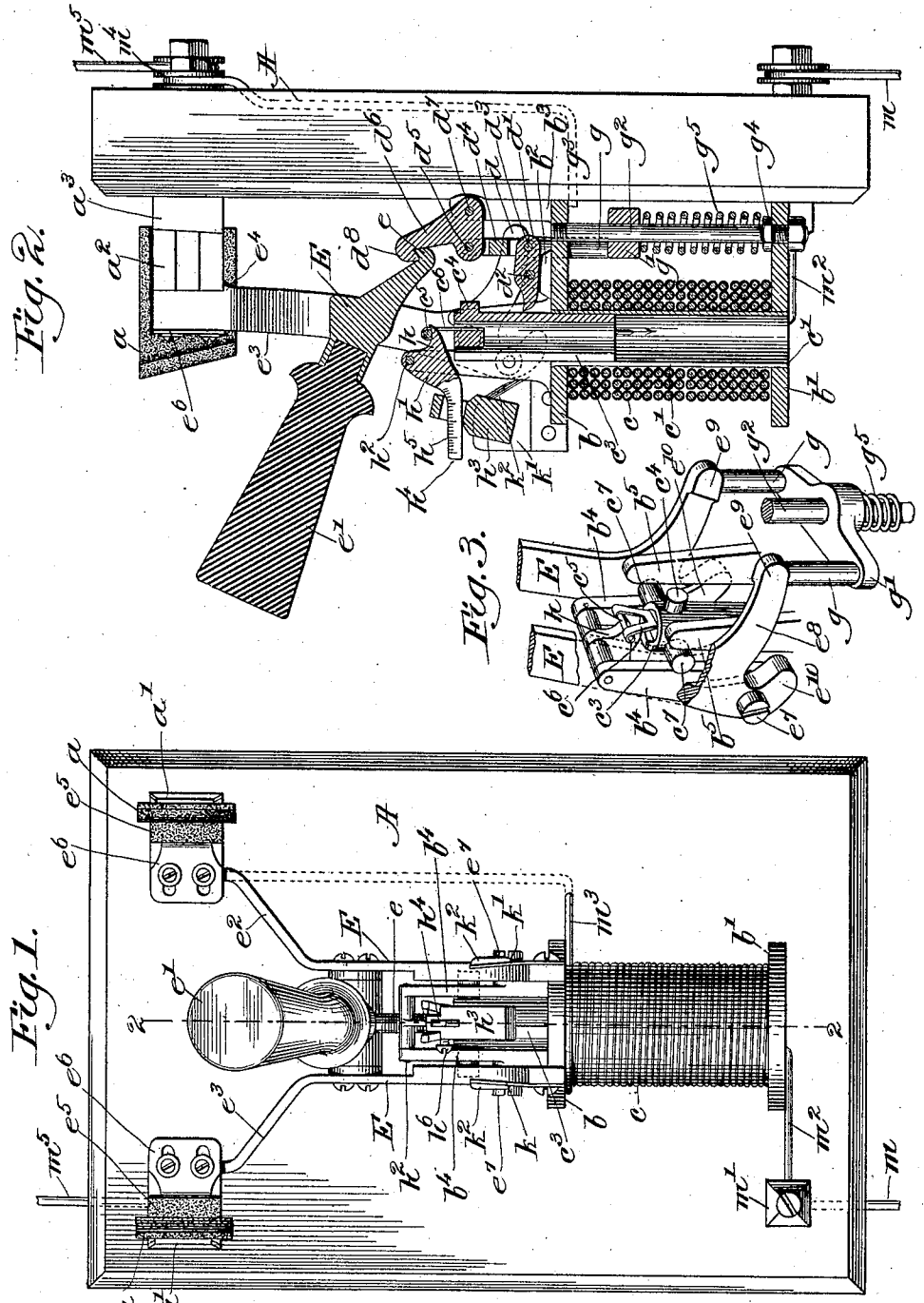

Witnesses:

A. C. Harrison

Edward W. Allen.

Inventor:

Leonard L. Elden.

by Crosby & Gregory, Attys.

No. 680,652.

Patented Aug. 13, 1901.

L. L. ELDEN.

CIRCUIT BREAKER.

(Application filed Nov. 8, 1897.)

(No Model.)

3 Sheets—Sheet 2.

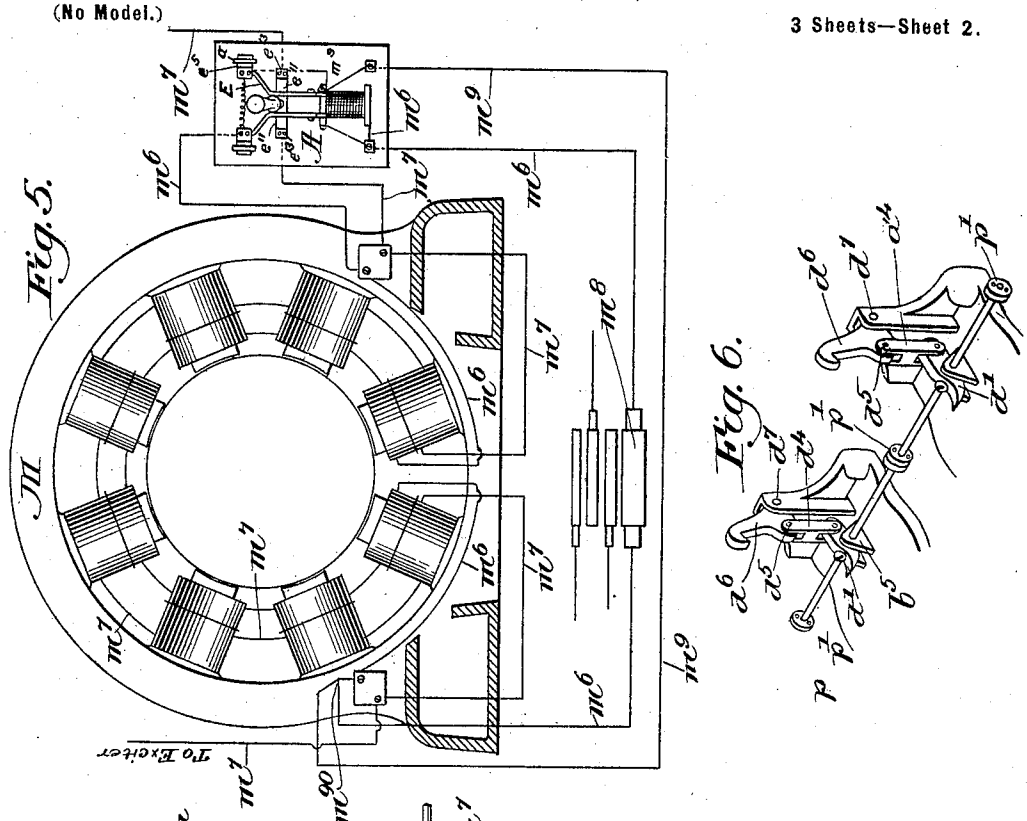

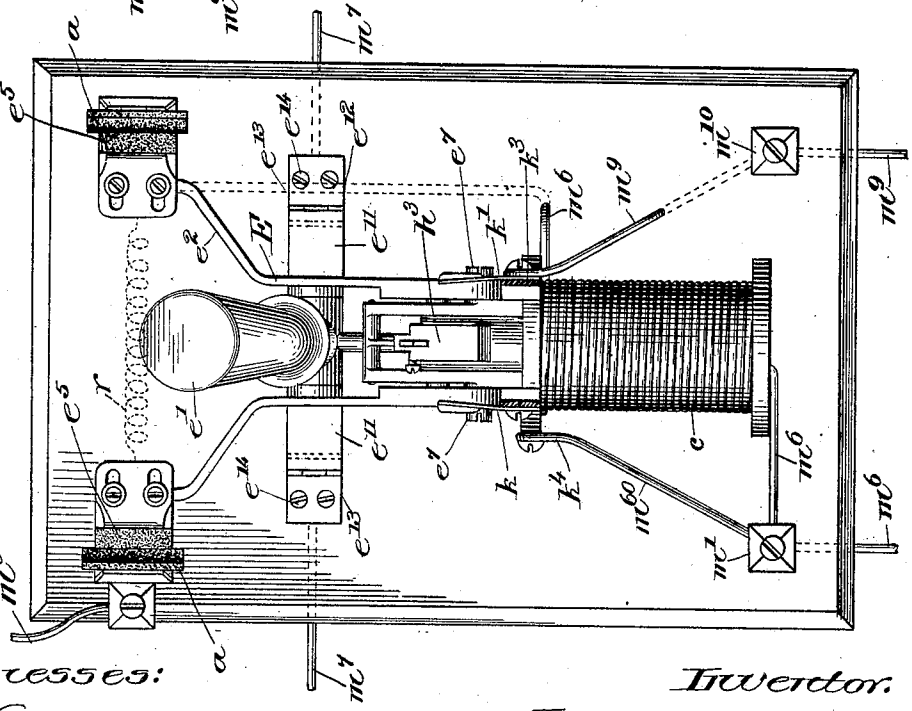

Witnesses:
A. C. Harrison.
Edward H. Allen.

Inventor:
Leonard L. Elden.
by Crosby & Gregory.
Attys

No. 680,652.

Patented Aug. 13, 1901.

L. L. ELDEN.

CIRCUIT BREAKER.

(Application filed Nov. 8, 1897.)

(No Model.)

3 Sheets—Sheet 3.

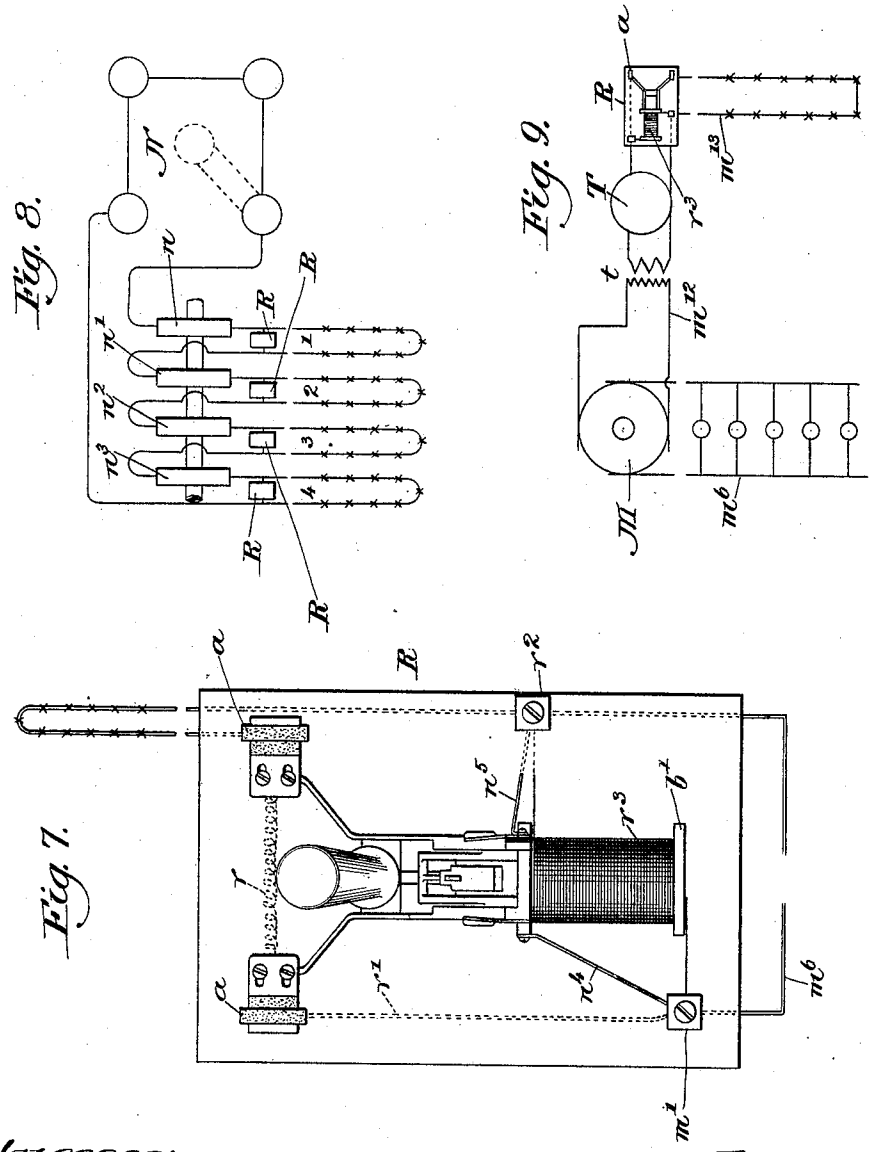

Witnesses:

A. C. Harmon

Edward F. Allen.

Inventor:

Leonard L. Elden.

by Crosby & Gregory

attys.

UNITED STATES PATENT OFFICE.

LEONARD L. ELDEN, OF BOSTON, MASSACHUSETTS.

CIRCUIT-BREAKER.

SPECIFICATION forming part of Letters Patent No. 680,652, dated August 13, 1901.

Application filed November 8, 1897. Serial No. 657,752. (No model.)

To all whom it may concern:

Be it known that I, LEONARD L. ELDEN, of Boston, county of Suffolk, State of Massachusetts, have invented an Improvement in Circuit-Breakers, of which the following description, in connection with the accompanying drawings, is a specification, like letters on the drawings representing like parts.

My invention is an improvement in electrical circuit-breakers or cut-outs for the safety of and protection to the machinery of a plant, and from fire and loss of life, due to an excessive increase in the amperage, particularly of an alternating generator.

As is well known, an alternating generator rapidly develops an enormous output, liable to burn out the generator and cause other disaster if the generator is short-circuited or overloaded; and it is the object of my invention to provide an automatic circuit breaker or controller which operates by gravity instantly to cut out the generator under such circumstances, my invention also preventing the resetting of the controller or the remaking of the circuit until the difficulty has been remedied; also, providing an ampere adjustment or means for setting the controller for any given amperage desired without requiring any change whatever in the position of the armature.

In the preferred form of my invention I provide means for entirely killing or stopping the generator from generating current by simultaneously cutting out both the field-exciter and the main current, this feature of my invention also providing means for simultaneously closing both of said circuits by one movement of the circuit-breaker.

A further feature of my invention resides in causing the armature to strike its own tripping or releasing blow for operating the cut-out without any help from the solenoid, as has been heretofore required, the main advantage of this feature being that thereby fewer turns are required and less power to operate the circuit-breaker.

Heretofore it has been customary to put the cut-out or controller on the switchboard removed from the dynamo, so that it has sometimes occurred that the latter has been short-circuited internally without opening the cut-out, resulting in the damage or destruction of the generator; but, as will appear more fully later on, my invention includes such an arrangement that no short-circuit can occur either externally of or internally in the generator without instantly opening the cut-out and killing the machine.

My invention is particularly adapted to generators having a composite field, although applicable to any kind of a generator or wherever a feed-circuit or any other circuit-breaker is required, and my invention is further adapted to multiphase machines operated in multiple, this feature providing means whereby if a mistake occurred in coupling the machines together the cut-out would entirely throw out the dynamo affected, not merely cutting out the main current thereof, but absolutely killing or throwing out the dynamo from the circuit.

A further feature of my invention herein disclosed relates to means whereby a two or three phase or monocyclic alternator may be entirely cut out when any one of its line-wires or circuits is short-circuited or overloaded, irrespective of whichever one it may be, so that no disturbance is possible to the dynamo from outside sources; also, in situations where there are a plurality of circuits interdependent or so related that a short-circuit or rise of current in any one produces effects in connection with others thereof I employ a corresponding number of automatic circuit-breakers and tripping apparatus therefor responding to the opening of any one of the automatic circuit-breakers and operating to positively trip the other or others.

The details of construction of my invention will be more fully pointed out in the following description, and the operation thereof will be particularly set forth, the novel features of my invention being defined in the appended claims.

In the drawings illustrative of a preferred embodiment of my invention, Figure 1 is a front elevation of a circuit-breaker constructed to embody my invention in its simplest form. Fig. 2 is a central vertical section thereof on the line 2 2, Fig. 1. Fig. 3 is an enlarged fragmentary view, in perspective, of a detail of construction. Fig. 4 is a view similar to Fig. 1, showing further details of construction and wiring. Fig. 5 is a view,

partly in section and partly diagrammatic, illustrating the use of my invention in connection with a composite-wound dynamo. Fig. 6 is a fragmentary view in perspective illustrating the connection for operating several of my circuit-breakers simultaneously. Fig. 7 is a view similar to Fig. 1, showing my invention constructed for operating with and for a constant-current circuit. Fig. 8 illustrates diagrammatically the application thereof to a multicircuit dynamo. Fig. 9 is a similar diagrammatic view showing the connections of the constant-current break with an alternator.

Referring to Figs. 1 and 2, which show the more simple embodiment of my invention, A designates a suitable base of soapstone or other usual material adapted to be screwed or bolted in vertical position where desired, and on this base are secured brackets b b', which support a solenoid c, coiled about a shell c' or other convenient support and within which an armature c^2 may reciprocate. This armature is herein shown as split at c^3 or otherwise laminated in order to prevent eddy-currents, and is provided at its upper end with a lug or hammer c^4, projecting rearwardly to engage the lip end d of a trip d', pivotally mounted at d^2 in lugs b^2, projecting from the bracket b. This trip is pivotally connected at d^3 opposite the lip end d to a link d^4, pivoted at d^5 to the forward end of a detent d^6, mounted at d^7 between the upper ends of arms b^3 of the bracket b. The detent d^6 is provided with a hooked end d^8, adapted to retain a similar hooked end e of a contact-lever E in locking engagement therewith, as shown in Fig. 2. The lever E is provided with a usual insulating-handle e', of ebonite or other suitable material, mounted between or on the bifurcated copper or brass contact-arms e^2 e^3, which have at their outer ends the usual make-and-break devices, comprising contact-blades e^4 and carbons e^5, yieldingly and adjustably supported on brackets e^6 and coöperating with carbons a, yieldingly supported on spring-brackets d' and adjacent spring-clips a^2, secured at a^3 to the base A.

The lever E is pivotally mounted at e^7 on stands b^4, projecting upwardly from the bracket b at each side of the armature c^2, said lever E having legs e^8 depending adjacent the bracket b at its rear upper side, said legs having feet or enlargements e^9 to engage the upper ends of opposite spring-plungers g, carried on a cross-head g', reciprocable on a rod g^2, secured at g^3 in the bracket b and at g^4 in the bracket b'. Between the cross-head and the bracket b' the rod g^2 is surrounded by a stiff spring g^5, so that when the lever E is placed in locking engagement with the detent d^6, as shown in Fig. 2, the legs e^8 are caused to depress the plungers g and compress the spring g^5, the result being that when subsequently the detent is automatically released, as will be presently explained, the spring g^5 forcibly and instantly throws the lever E backward, thereby breaking the circuit. As the lever E is thrown backward it is caught by opposite buffer-springs k k', flared at k^2 and mounted on the bracket b.

The armature c^2 is normally held suspended by a catch or bail c^5, supported at the free extremities of a spring c^6, as clearly shown in Fig. 3, on a tongue h of a dog h', pivoted at h^2 in the upper ends of the stands b^4, said dog having a weight h^3 mounted on an arm h^4 thereof, said arm preferably being graduated, as indicated at h^5, to indicate the amperes to which the weight is set, as will be presently explained, the weight being provided with means of adjustment, a set-screw h^6 being herein shown for the purpose. The armature has opposite studs c^7, adapted to travel in ways provided between the vertical rear edges of the stands b^4, and opposite parallel front edges of guides b^5, projecting from the bracket b, so that when the current in the solenoid is unduly increased from any cause the moment its amperage exceeds that to which the weight h^3 is set it will draw the armature c^2 down out of engagement with the tongue h of the dog, and the moment the armature escapes from the dog it will drop by its own weight, causing its hammer c^4 to strike the trip d' and instantly release the detent d^6 from engagement with the lever E, permitting the spring g^5 instantaneously to throw back the lever and break the circuit.

The lever E is provided adjacent the bracket b with fingers e^{10} in the path of the studs c^7, adapted to engage the latter and lift the armature, restoring it into engagement with the dog h', the spring c^6 yielding for this purpose and permitting the bail c^5 to ride over the curved under side of the tongue h and snap into engagement therewith above the same. It will be understood that this movement takes place with extreme rapidity and automatically, inasmuch as the instant the hammer c^4 strikes the lip d, thereby releasing the detent d^6, the lever E is at once thrown back, thereby raising its fingers e^{10} and at once restoring the armature into its raised position, as shown in Fig. 2. Under ordinary circumstances the lever E will be left in its backwardly-thrown position until the short-circuiting or other cause of the piling up of current in the circuit has been remedied. If, however, any one should attempt to make the circuit again before this has been done by restoring the lever to its original position, my invention provides that such attempt will be ineffectual, for the reason that as long as the amperage of the current remains above the point to which the weight h^3 is set the solenoid will hold down the armature out of engagement with the dog h' whenever the lever E is raised so as to permit its fingers e^{10} to release said armature, and this lowering of the armature will, as is evident, maintain the detent d^6 thrown back, so that it cannot engage the lever E.

When my invention is used simply to cut

out a line-wire or feed-circuit, the connections are as shown in Fig. 1, where m designates the feed or line wire going to a binding-post m' and thence at m^2 to the solenoid, passing at m^3 through the base A and thence to a post m^4, extending from the right-hand contact, as herein shown, the out wire being connected to the left-hand contact at m^5. A further feature of my invention, however, resides in adapting it for use in connection with the exciter-field of a dynamo, this being illustrated in Figs. 4 and 5. Referring to the latter, M designates any kind of an alternator, herein shown as a composite-wound generator and of which m^6 is the composite-field circuit and m^7 the excited field-circuit. In order that the exciter-circuit may be controlled by the circuit-breaker, I secure to the lever E thereof in any convenient position, herein shown in Fig. 4 as beneath the handle e', a bar e^{11}, insulated from the handle and having at its ends contacts e^{12} to coöperate with usual contact-springs e^{13}, secured at e^{14} to the base A, the exciting-wire m^7 being connected to these contact-springs e^{13}, as shown in Fig. 4. This construction, as will be evident, insures that whenever the circuit m^6 of the generator is broken the exciter-circuit m^7 will be simultaneously broken also, (and this applies for any main circuit and exciter-circuit whether in a composite-field generator or not,) so that there is no possibility whatever of any piling up of current in the dynamo when any short-circuiting or overloading has occurred at any point. This provision is especially intended for alternators where it is desired entirely and instantly to kill or stop the dynamo generating.

Referring further to Figs. 4 and 5, it will be observed that I have provided a resistance-coil r across the contacts a a, connecting under the base A from one post to the other, and have insulated the buffer-springs k and k' at k^3 and connected it by a short-circuiting wire m^9 through a binder-post m^{10} to one side of the commutator at m^{90}, said circuit being completed by a tap m^{60} from the breaker at k^4 to the other side of the commutator, this provision being for the composite type of dynamo. In such dynamos when the breaker is opened destructive arcing occurs at the commutator m^8 on account of the back kick or field or armature discharge, and this resistance r prevents the actual opening of the composite field-circuit upon the release of the lever E, but allows the current to pass through itself (in much-reduced quantity) until the lever E has made contact with the buffer-springs k k', whereupon the composite field is instantly short-circuited through the connections m^{60}, k, E, k', m^9, and m^6 at m^{90}. It will thus be seen that the dynamo is entirely cut out or killed without any sparking at the commutator or strain on the insulation of either armature or field.

In Fig. 6 I have illustrated a further feature of my invention, where p designates a rod on which are rigidly secured the respective trips d' of a plurality of circuit-breakers mounted side by side, the rod p being pivotally supported in brackets b^5. The rod is composed of sections, one for each breaker, having insulated joints p', the construction and wiring of the respective breakers being otherwise the same as already described. This provision is particularly intended for multiphase and monocyclic generators, in which case a circuit-breaker is provided for each line-wire of the generator, so that in a three-phase generator, for example, there will be three circuit-breakers, and these breakers are all coupled together in a gang by the rod p or any equivalent therefor. When, therefore, an accident occurs to any one circuit of the generator, not only is that line cut out, but the entire generator is instantly killed, because the tripping of any one trip d' acts through the rocker-rod p simultaneously to operate all the trips, and thereby release all the levers E, cutting out all the line-wires, as well as the exciter-wire, of the generator.

Referring to Figs. 7 to 9, I have shown a feature of my invention for use with a single-circuit or a multicircuit series dynamo or with any series circuit—*i. e.*, where the current is kept constant and the voltage varies with the load, as distinguished from dynamos or circuits wherein the voltage is kept constant and the current or amperage varies with the load. The latter is the case in those features of my invention already described. In the former, however, it frequently happens a circuit or some part of it will break or a fixture or lamp will prove defective, thereby causing an arc to be made which is liable to cause fires or lead to other danger; but as the amperage remains the same, being held constant by the controller of the dynamo, a break depending upon the main circuit for its operation, as previously described, would not work, or at least would not be sufficiently sensitive to work, soon enough to cut out the circuit before the damage had been accomplished. Accordingly in Fig. 8 N indicates a usual single or multicircuit dynamo, herein shown as the latter, having commutators n n' n^2 n^3, from which the circuits 1 2 3 4 are connected in series, as usual. In each circuit I interpose a break R, having the line-wires connected thereto at m', Fig. 7, and passing thence at r' to a contact a, preferably through a shunt or resistance coil r, to the opposite contact a, thence to the lamps or other translating devices, and back through a post r^2 to the dynamo N. The solenoid of the break is wound with a fine wire r^3 in shunt across the line-circuit, being shown connected between the binding-posts m' r^2, the break being provided with a short-circuit n^4 n^5, the same as already described and shown in Fig. 4 at m^9 m^{60}. Thus when accident occurs in any one of the line-wires of the circuits 1, 2, 3, or 4, as the case may be,

the fine wire r^3 will cause the break of that particular circuit to respond instantly and cut out that circuit by short-circuiting it through the wires $n^4 n^5$ across the break, and this occurs without in any wise affecting any of the remaining circuits.

Fig. 9 shows an application to an alternator, M indicating an alternating generator or dynamo, which may have its usual multiple circuit m^6 and is provided with a circuit m^{12}, leading to a transformer t and rectifier T, which produce a constant current for the lamp-circuit m^{13}, in which I place my break R, as shown.

The operation of my invention will be readily understood from the above description.

Referring to the more complex form of the invention shown in Fig. 4, we will suppose it is fastened, as stated, directly on the dynamo. (Shown in Fig. 5.) If now a short-circuit occur on the main line or in the generator or the circuit be overloaded, the instant the amperage increases to the point at which the weight h^3 is set the solenoid c will draw down the armature c^3 sufficiently to disengage its bail c^5 from the tongue h, whereby it drops at once by gravity forcibly into contact with the trip d', thereby throwing back the detent d^6 out of engagement with the lever E at e. This permits the latter to be forcibly thrown out by the spring g^5 and plungers g, breaking the contacts at a and e^{13} and immediately making contact with the buffers k k'. The break at e^{13} at once cuts out the exciter-circuit m^7, and the break at a a at once cuts out the composite circuit or field. Ordinarily this would kill the generator; but to make it absolutely certain the contact made at k k' (or any other place desired) by the lever E as it was thrown down completes the circuit m^9 across the commutator m^8 and short-circuits the entire generator, the resistance r effectually preventing any disastrous sparking at the commutator, which would otherwise result from the sudden drop. When my invention is used as a feed-circuit breaker or controller, the exciter-contacts and connections m^9 m^{60} are omitted, as shown in Fig. 1. For a two-phase alternating-current generator two breakers would be coupled together, as indicated in Fig. 6, so that, for example, if one pair of the wires, which might be used to light a building, should get short-circuited or overloaded while the other pair were unaffected, nevertheless the generator will be effectually killed, because whichever solenoid acts its armature and trip rock the shaft p and trip both cut-outs, and thereby prevent any disturbance of the generator from outside sources over the circuit not primarily affected. So, if several multiphase generators were operated in multiple, if a mistake occurred in coupling them together the circuit-breakers would act simultaneously and entirely throw out the generator affected. When the fault which occasioned the break has been remedied, the two circuits of the exciter-field and the composite field (this being the type with which I have illustrated the use of my invention, Fig. 5) are simultaneously made or restored again by one return movement of the one handle e', the lever E being caught and held by the detent d^6; but if the fault has not been entirely remedied no one can by accident or design restore the lever, because the armature will constantly fall and hold back the detent, as before explained. In use with a constant-current series circuit, either direct or not, if a break or other accident occurs—for instance, in circuit 2, Fig. 8—the shunt-winding r^3 responds at once and instantly cuts out the main circuit 2 or short-circuits it through n^4 n^5, so that there is no danger of live wires, &c., in the street and at the same time the other circuits 1, 3, and 4 are unaffected. In Fig. 9 the shunt-winding r^3 acts in substantially the same way to cut out the main line or circuit m^{13} by the opening of the circuit upon the release of the break-lever.

It will be understood that very many changes in construction and arrangement of parts and in the wiring may be resorted to without departing from the spirit and scope of my invention, the latter not being otherwise limited than as hereinafter expressed in the claims.

Having described my invention, what I claim, and desire to secure by Letters Patent, is—

1. An automatic circuit-breaker, comprising a break-lever, means normally holding it in contact position, and automatic tripping mechanism to trip said holding means, said tripping mechanism including a trip, a gravity device to engage said trip, a dog normally sustaining said gravity device, and a solenoid to release said gravity device and permit it to fall into engagement with said trip, and means preventing the reëngagement of said lever by said holding means during the continuance of the disturbance which caused it to be tripped, substantially as described.

2. An automatic circuit-breaker, comprising contacts, a break-lever, a detent for said lever, and tripping mechanism for said detent, including a solenoid, and an armature, means independent of the armature for varying the resistance of said armature without affecting in any way the position of the armature, substantially as described.

3. A circuit-breaker, in combination with a dynamo, contacts and connections normally making proper field and line circuits for the latter, and other contacts and short-circuit connections for the dynamo normally broken by said breaker, the break-lever of said circuit-breaker serving to break said first-mentioned connections and thereby make said other connections, the latter when made short-circuiting the dynamo-fields, substantially as described.

4. An automatic circuit-breaker, compris-

ing a break-lever, a solenoid, an armature actuated by said solenoid, and a dog pivoted above said armature, the latter having a catch to engage said dog, and said dog being provided with a weight adjustable thereon to counterbalance said armature, a detent normally engaging said lever and holding it in closed position, and tripping mechanism in the path of said armature and connected with and to trip said detent, substantially as described.

5. An automatic circuit-breaker, comprising a break-lever, a solenoid, an armature actuated by said solenoid, and a dog pivoted above said armature, the latter having a spring-catch to engage said dog and said dog being provided with a weight adjustable thereon to counterbalance said armature, a detent normally engaging said lever and holding it in closed position, and tripping mechanism in the path of said armature and connected with and to trip said detent, whereby upon a predetermined excitation of said solenoid, said armature will be withdrawn from said dog and permitted to fall in contact with said tripping mechanism, substantially as described.

6. An automatic circuit-breaker, comprising a break-lever, a solenoid, an armature actuated by said solenoid, and a dog pivoted above said armature, the latter having a spring-catch to engage said dog, and said dog being provided with a weight adjustable thereon to counterbalance said armature, a detent normally engaging said lever and holding it in closed position, and tripping mechanism in the path of said armature and connected with and to trip said detent, whereby upon a predetermined excitation of said solenoid, said armature will be withdrawn from said dog and permitted to fall in contact with said tripping mechanism, said lever having means tending to restore said armature to its engaged position with said dog, substantially as described.

7. A circuit-breaker, comprising a break-lever, automatic actuating mechanism therefor, separated contacts adapted to be opened and closed by said break-lever, a resistance device between said contacts, a main circuit including said actuating mechanism and normally made by the closing of said lever with said contacts, a second circuit normally broken, and means closing said second circuit by the full opening movement of said lever, said resistance preventing destructive sparking at said contacts by the opening movement of said lever while the lever is moving from closed position to fully-open position, substantially as described.

8. Tripping apparatus for automatic circuit-breakers comprising the combination with two or more automatic circuit-breakers and their circuits, of means responding to the opening of any one of the automatic circuit-breakers and operating to positively trip the other or others, substantially as described.

9. A plurality of circuit-breakers, each provided with its own independently-movable lever having their releasing devices coupled together by insulated sections whereby electrical action in one produces corresponding mechanical action in all, substantially as described.

10. The combination with a constant-current circuit, of a break in said circuit, and automatic break-operating means responding instantly to the initial rise in potential in the circuit due to a break or other accident therein, substantially as described.

11. The combination with a constant-current circuit, of a break in said circuit, and a shunt across and in direct, uninterrupted connection with said circuit and including the break, said break being responsive to said shunt for cutting out the said circuit, substantially as described.

12. The combination with a constant-current circuit, of a circuit-breaker in said circuit, short-circuit connections from the terminals of said circuit to said circuit-breaker and normally broken thereat, and automatic means to operate said circuit-breaker responsive to rise in potential in the circuit due to a break or other accident therein, said short-circuit connections being closed by the said automatic operation of the circuit-breaker, substantially as described.

In testimony whereof I have signed my name to this specification in the presence of two subscribing witnesses.

LEONARD L. ELDEN.

Witnesses:
GEO. H. MAXWELL,
FREDERICK L. EMERY.