OPIC
Office de la propriété intellectuelle du Canada

CIPO
Canadian Intellectual Property Office

(12) (19) (CA) **Demande-Application**

(21) (A1) **2,305,421**
(86) 1998/09/29
(87) 1999/04/22

(72) SORENSEN, ERLAND, SE
(72) LEIJON, MATS, SE
(71) ABB AB, SE

(51) Int.Cl.[6] H02K 11/00, H02K 19/36
(30) 1997/09/30 (9703553-9) SE

(54) **MACHINE SYNCHRONE**
(54) **SYNCHRONOUS MACHINE**

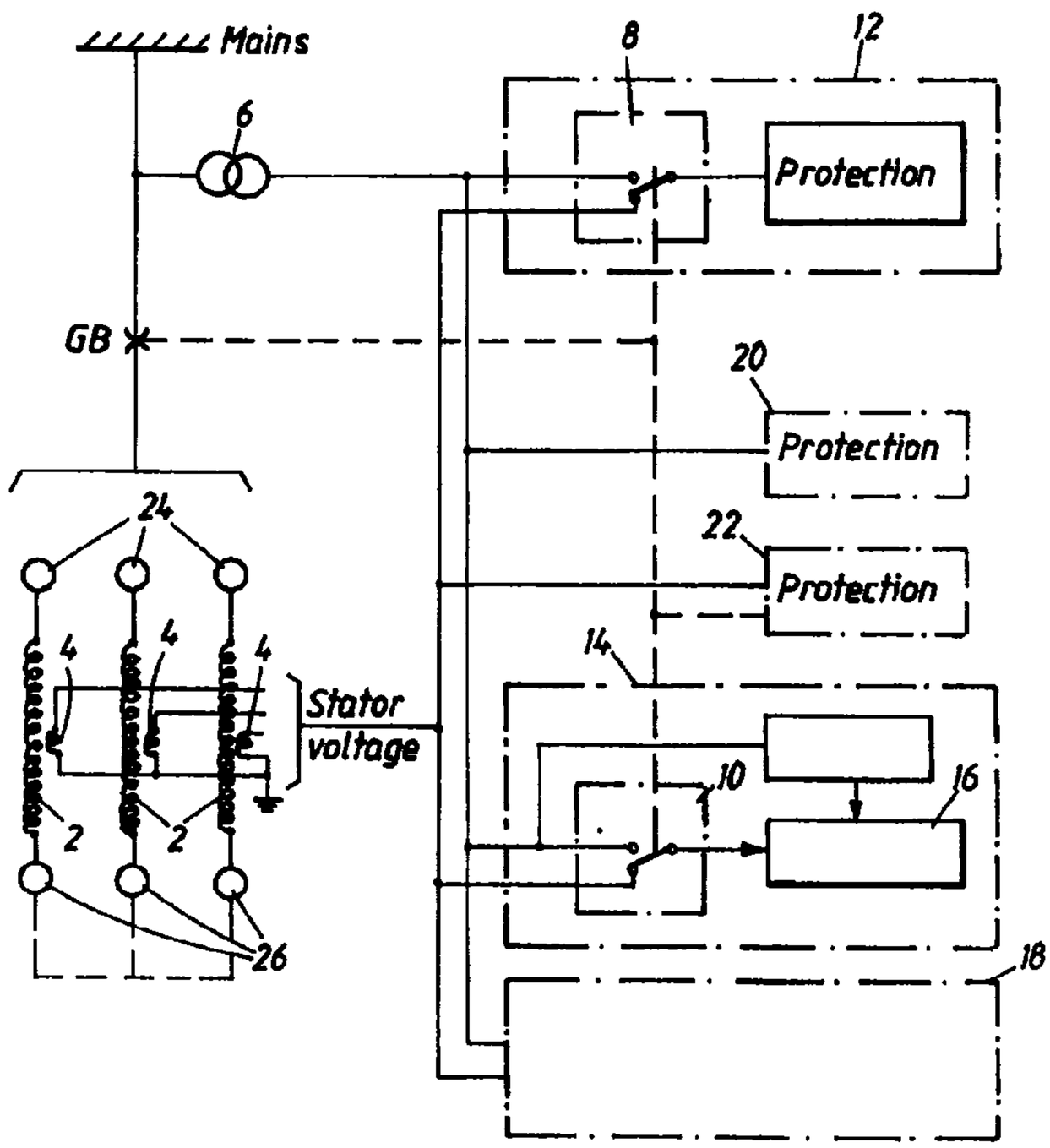

(57) Cette machine synchrone est conçue pour être directement connectée à un réseau de distribution ou de transmission. Un enroulement du stator (2) au moins comprend au moins un conducteur électrique, une première couche à propriétés semi-conductrices entourant le conducteur, une couche isolante solide

(57) A synchronous machine is intended for direct connection to a distribution or transmission network. At least one stator winding (2) of the machine comprises at least one electric conductor, a first layer with semiconducting properties surrounding the conductor, a solid insulating layer surrounding the first layer, and a

OPIC
Office de la propriété intellectuelle du Canada

CIPO
Canadian Intellectual Property Office

(21) (A1) **2,305,421**
(86) 1998/09/29
(87) 1999/04/22

entourant cette première couche et une seconde couche à propriétés semi-conductrices entourant la couche isolante. Cette machine est également pourvue de dispositifs de mesure (4) destiné à analyser la tension existant dans l'enroulement du stator. Selon une technique de mesure de la tension existant dans l'enroulement du stator de cette machine, on décale la phase du signal mesuré afin de la faire coïncider avec la position de phase de la tension totale de l'enroulement du stator.

second layer with semiconducting properties surrounding the insulating layer. Measuring means (4) are also arranged to sense the voltage in the stator winding. In a method for measuring the voltage in the stator winding of such a machine, the phase of the measured signal is shifted to coincide with the phase position of the total voltage of the stator winding.

PCT WORLD INTELLECTUAL PROPERTY ORGANIZATION
International Bureau

INTERNATIONAL APPLICATION PUBLISHED UNDER THE PATENT COOPERATION TREATY (PCT)

(51) International Patent Classification 6 : H02K 11/00, 19/36 — A1

(11) International Publication Number: WO 99/19968

(43) International Publication Date: 22 April 1999 (22.04.99)

(21) International Application Number: PCT/SE98/01739

(22) International Filing Date: 29 September 1998 (29.09.98)

(30) Priority Data:
9703553–9 30 September 1997 (30.09.97) SE

(71) Applicant *(for all designated States except US)*: ASEA BROWN BOVERI AB [SE/SE]; S–721 83 Västerås (SE).

(72) Inventors; and
(75) Inventors/Applicants *(for US only)*: SÖRENSEN, Erland [SE/SE]; Gudruns väg 32, S–723 55 Västerås (SE). LEIJON, Mats [SE/SE]; Hyvlargatan 5, S–723 35 Västerås (SE).

(74) Agent: HOPFGARTEN, Nils; L.A. Groth & Co.KB, P.O. Box 6107, S–102 32 Stockholm (SE).

(81) Designated States: AL, AM, AT, AU, AZ, BA, BB, BG, BR, BY, CA, CH, CN, CU, CZ, CZ (Utility model), DE, DE (Utility model), DK, DK (Utility model), EE, ES, FI, FI (Utility model), GB, GE, GH, GM, HR, HU, ID, IL, IS, JP, KE, KG, KP, KR, KZ, LC, LK, LR, LS, LT, LU, LV, MD, MG, MK, MN, MW, MX, NO, NZ, PL, PT, RO, RU, SD, SE, SG, SI, SK, SK (Utility model), SL, TJ, TM, TR, TT, UA, UG, US, UZ, VN, YU, ZW, ARIPO patent (GH, GM, KE, LS, MW, SD, SZ, UG, ZW), Eurasian patent (AM, AZ, BY, KG, KZ, MD, RU, TJ, TM), European patent (AT, BE, CH, CY, DE, DK, ES, FI, FR, GB, GR, IE, IT, LU, MC, NL, PT, SE), OAPI patent (BF, BJ, CF, CG, CI, CM, GA, GN, GW, ML, MR, NE, SN, TD, TG).

Published
With international search report.
In English translation (filed in Swedish).

(54) Title: SYNCHRONOUS MACHINE

(57) Abstract

A synchronous machine is intended for direct connection to a distribution or transmission network. At least one stator winding (2) of the machine comprises at least one electric conductor, a first layer with semiconducting properties surrounding the conductor, a solid insulating layer surrounding the first layer, and a second layer with semiconducting properties surrounding the insulating layer. Measuring means (4) are also arranged to sense the voltage in the stator winding. In a method for measuring the voltage in the stator winding of such a machine, the phase of the measured signal is shifted to coincide with the phase position of the total voltage of the stator winding.

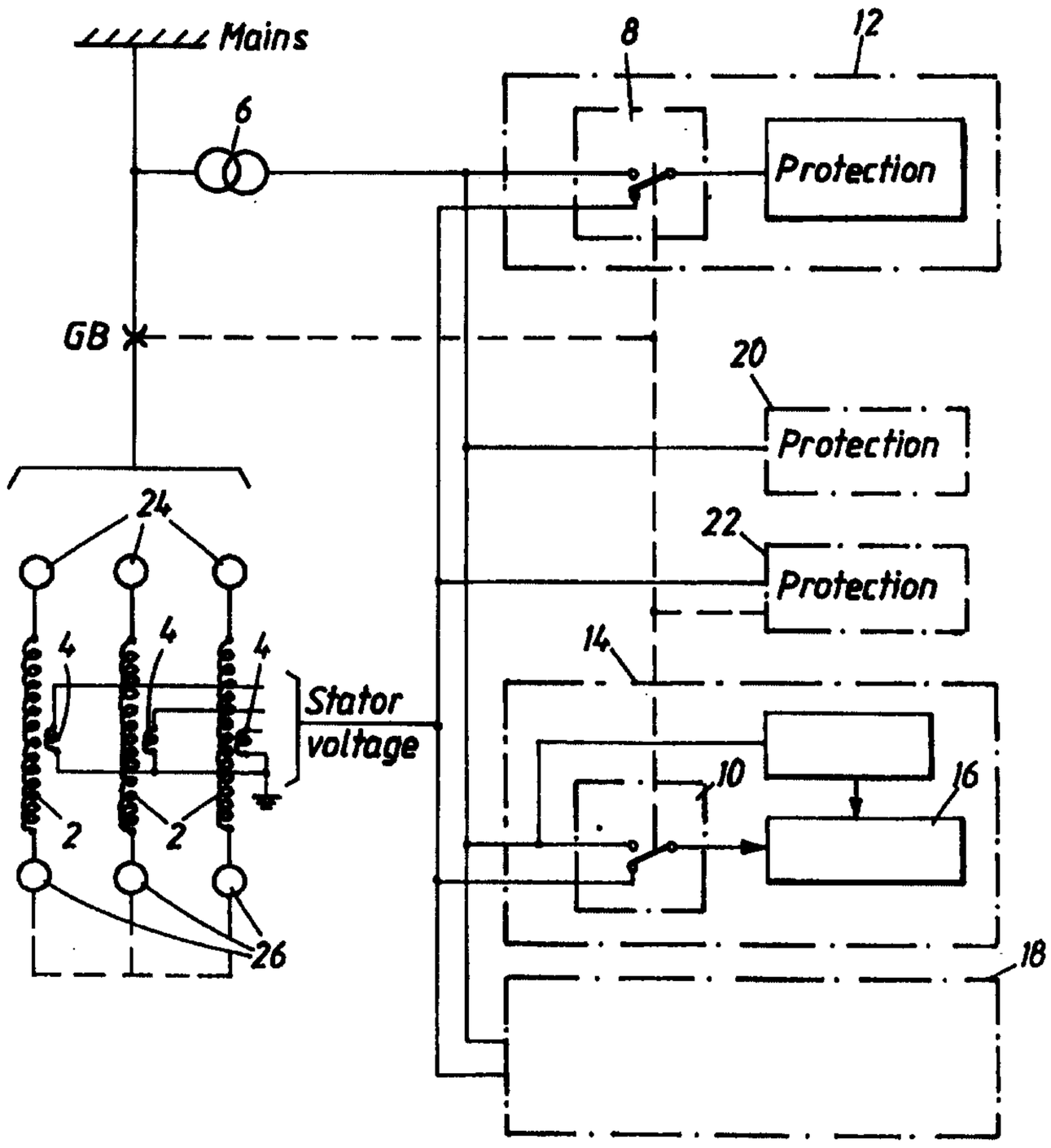

SYNCHRONOUS MACHINE

Technical field

The present invention relates to a synchronous machine intended for direct connection to a distribution or transmission network. The invention also relates to a method for measuring the voltage in the stator winding of such a machine.

Background art

In order to connect electric machines to distribution or transmission networks, in the following commonly called power networks, transformers have previously been used to step up the voltage to the level of the network, i.e. to the range of 130-400 kV.

Generators having a rated voltage of up to 36 kV are described by Paul R. Siedler in an article entitled "36 kV Generators Arise from Insulation Research", Electrical World, 15 October 1932, pages 524-527. These generators comprise windings of high-voltage cable in which the insulation is divided into various layers having different dielectric constants. The insulating material used consists of various combinations of the three components mica-foil-mica, varnish and paper.

It has now been discovered that by manufacturing windings of the machine out of an insulated high-voltage electric conductor with solid insulation of a type similar to cables for power transmission, the voltage of the machine can be increased to such levels that the machine can be connected directly to any power network without an intermediate transformer. A typical operating range for these machines is 30 to 800 kV.

In the case of large synchronous machines three-phase measurement of stator current and stator voltage is normally used nowadays for protection, measuring and control purposes. In certain cases three-phase measurement of corresponding quantities is also used on incoming lines. The cost of performing these measurements is considerable for high voltage levels and the demands for voltage measurement vary depending a.o. on the protection philosophy in question for the relevant machine or the relevant equipment.

The object of the present invention is thus to provide a synchronous machine designed for direct connection to power networks in which measurement of the terminal voltage of the unloaded machine is possible without the use of external measuring transformers.

Summary of the invention

This object is achieved with a synchronous machine as defined in claim 1.

The insulating conductor or high-voltage cable used in the present invention is flexible and is of the type described in more detail in WO 97/45919 and WO 97/45847. The insulated conductor or cable is described further in WO 97/45918, WO 97/45930 and WO 97/45931.

Thus, in the device in accordance with the invention the windings are preferably of a type corresponding to cables having solid, extruded insulation, like those currently used for power distribution, such as XLPE-cables or cables with EPR-insulation. Such a cable comprises an inner conductor composed of one or more strands, an inner semiconducting layer surrounding the conductor, a solid insulating layer surrounding this inner semiconducting layer, and an outer semiconducting layer surrounding the insulating layer. Such cables are flexible, which is an important property in this context since the technology for the machine according to the invention is based primarily on winding systems in which the winding is formed from conductors which are bent during assembly. The flexibility of a XLPE-cable normally corresponds to a radius of curvature of approximately 20 cm for a cable 30 mm in diameter, and a radius of curvature of approximately 65 cm for a cable 80 mm in diameter. In the present application the term "flexible" is used to indicate that the winding is flexible down to a radius of curvature in the order of four times the cable diameter, preferably eight to twelve times the cable diameter.

The winding should be constructed to retain its properties even when it is bent and when it is subjected to thermal or mechanical stress during operation. It is vital that the layers retain their adhesion to each other in this context. The material properties of the layers are decisive here, particularly their elasticity and relative coefficients of thermal expansion. In a XLPE-cable, for instance, the

insulating layer consists of cross-linked, low-density polyethylene, and the semiconducting layers consist of polyethylene with soot and metal particles mixed in. Changes in volume as a result of temperature fluctuations are completely absorbed as changes in radius of the cable and, thanks to the comparatively slight difference between the coefficients of thermal expansion in the layers in relation to the elasticity of these materials, the radial expansion can take place without the adhesion between the layers being lost.

The material combinations stated above should be considered only as examples. Other combinations fulfilling the conditions specified and also the condition of being semiconducting, i.e. having resistivity within the range of 10^{-1}-10^{6} ohm-cm, e.g. 1-500 ohm-cm, or 10-200 ohm-cm, naturally also fall within the scope of the invention.

The insulating layer may consist, for example, of a solid thermoplastic material such as low-density polyethylene (LDPE), high-density polyethylene (HDPE), polypropylene (PP), polybutylene (PB), polymethyl pentene (PMP), cross-linked materials such as cross-linked polyethylene (XLPE), or rubber such as ethylene propylene rubber (EPR) or silicon rubber.

The inner and outer semiconducting layers may be of the same basic material but with particles of conducting material such as soot or metal powder mixed in.

The mechanical properties of these materials, particularly their coefficients of thermal expansion, are affected relatively little by whether soot or metal powder is mixed in or not - at least in the proportions required to achieve the conductivity necessary according to the invention. The insulating layer and the semiconducting layers thus have substantially the same coefficients of thermal expansion.

Ethylene-vinyl-acetate copolymer/nitrile rubber, butylymp polyethylene, ethylene-acrylate-copolymers and ethylene-ethyl-acrylate copolymers may also constitute suitable polymers for the semiconducting layers.

Even when different types of material are used as base in the various layers, it is desirable that their coefficients of thermal expansion are of the same order of magnitude. This is the case with the combination of the materials listed above.

The materials listed above have relatively good elasticity, with an E-modulus of E<500 MPa, preferably <200 MPa. The elasticity is sufficient for any minor differences between the coefficients of thermal expansion for the materials in the layers to be absorbed in the radial direction of the elasticity so that no cracks or other damages appear and so that the layers are not released from each other. The material in the layers is elastic, and the adhesion between the layers is at least of the same order of magnitude as in the weakest of the materials.

The conductivity of the two semiconducting layers is sufficient to substantially equalize the potential along each layer. The conductivity of the outer semiconducting layer is sufficiently large to contain the electrical field in the cable, but at the same time sufficiently small not to give rise to significant losses due to currents induced in the longitudinal direction of the layer.

Thus, each of the two semiconducting layers essentially constitutes one equipotential surface, and the winding with these layers will substantially enclose the electrical field within it.

There is, of course, nothing to prevent one or more additional semiconducting layers being arranged in the insulating layer.

With the synchronous machine according to the invention, thus, a machine is achieved which can be connected to any power network and in which voltage measurement on the unloaded machine is possible without the use of separate measuring transformers.

According to an advantageous embodiment of the machine in accordance with the invention the measuring means for sensing the voltage comprise one measuring winding per phase, arranged in the stator winding of the machine. The measuring winding is insulated from the actual stator winding and can be realised in an advantageous manner with a separate measuring cable per phase built into the machine. Measuring with a separate measuring winding is possible as long as the machine is not connected to the network, i.e. as long as it is unloaded.

According to another advantageous embodiment of the machine in accordance with the invention the measuring means comprise at least one branch-off in a stator winding for determining the machine voltage from a

measured signal drawn off. This embodiment also allows measurement of the machine voltage even when the machine is loaded.

With the machine according to the invention, therefore, expensive measuring transformers are unnecessary since measurement is first performed with the aid of a measuring winding, after which the signal is transferred to a transformer at a later stage.

According to yet another advantageous embodiment of the machine according to the invention current transformers for low voltage and designed for cable lead-through are placed on the upper and lower side of the stator windings for current measuring. This enables faults in the winding to be detected. This embodiment is particularly simple to realise in a machine according to the invention in which the winding is formed of an insulated conductor as described above, the outer surface of which is at very low potential.

According to yet another advantageous embodiment of the invention in accordance with the invention, in which the machine is connected to the network via a circuit breaker, a switching module controlled by the signals from the breaker is arranged, depending on the position of the circuit breaker, to switch between a position for measuring the measuring voltage on the stator windings and a position for measuring the network voltage, for forwarding the voltages in question to subsequent equipments. The necessary adjustment to subsequent protection and control equipments is thus achieved.

Brief description of the drawings

To further explain the invention, embodiments of the invention selected by way of example will be described in more detail with reference to the accompanying drawings in which

Figure 1 shows a cross section through an insulated conductor intended for use in the windings of the machine according to the invention,

Figure 2 shows an embodiment of the invention illustrating voltage measurement on the stator windings of a synchronous machine, with the aid of measuring windings,

Figure 3 shows an embodiment of the invention illustrating voltage measurement on the stator windings of a synchronous machine, via branch-offs on the windings,

Figures 4 and 5 illustrate two principles for realising the correct phase angle between the voltages of the stator winding and of the measuring winding in the embodiment illustrated in Figure 2,

Figures 6 and 7 illustrate in corresponding manner two principles for realising the correct phase angle between the voltages of the stator winding and of the measuring winding in the embodiment illustrated in Figure 3,

Figure 8 shows an embodiment in which the voltage measurement is performed with the aid of two voltage transformers, one on each side of the generator breaker,

Figure 9 shows an embodiment in which the voltage measurement is performed with the aid of three voltage transformers, one on one side of the generator breaker and two on the other side,

Figure 10 illustrates determination of the angular position between two main voltages in the embodiments according to Figures 8 and 9,

Figure 11 shows the angular difference between two main voltages when the generator breaker is open and at constant frequency difference, and

Figure 12 illustrates a phasing function in the machine according to the invention.

Description of preferred embodiments of the invention

Figure 1 shows a cross section through an insulated conductor 11 intended for use in the windings of the machine in accordance with the invention. The insulated conductor 11 thus comprises a number of strands 35 made of copper, for instance, and having circular cross section. These strands 35 are arranged in the middle of the insulated conductor 11. Around the strands 35 is a first semiconducting layer 13. Around the first semiconducting layer 13 is an insulating layer 37, e.g. XLPE insulation. Around the insulating layer 37 is a second semiconducting layer 15. The insulated conductor or cable is flexible and this property is retained throughout its service life. Said three layers 13, 37, 15 are

such that they adhere to each other even when the insulated conductor is bent. The insulated conductor has a diameter within the interval 20-250 mm and a conducting area within the interval 80-3000 mm^2.

Figure 2 illustrates a principle for measuring the voltage on the stator windings 2 of a synchronous machine with the aid of three measuring windings 4 and signal interfaces for protection, measuring and control purposes. These separate measuring windings 4 are built in to the machine according to the invention, insulated from the stator windings. The measuring windings can be realised, for instance, with a separate measuring cable per phase. The measured signals can be voltage-adapted with the aid of suitable subsequent transformer connection, see Figure 4 below. The network voltage on the upper side of the generator breaker GB is also measured with the aid of a measuring transformer 6.

Switching between measuring modes is achieved with the aid of switching modules 8, 10 controlled by the ON/OFF signals of the generator breaker GB. One such switching module 8 is arranged in a relay protection 12 and another switching module 10 for the control system 14 for excitation of the machine, so that the voltage regulator 16 of the system is controlled depending on the stator and network voltages measured.

In similar manner the phasing equipment/turbine regulator 18 can be controlled depending on stator and network voltages measured.

Alternatively separate protection means 20, 22 for unloaded and loaded machine, respectively, may be arranged to be blocked or unblocked, respectively, by the ON/OFF signals of the generator breaker GB.

The machine in accordance with the invention also comprises current transformers 24, 26 with cable lead-through for current measurement on each side of the stator windings 2. Manufacturing the stator windings 2 out of the insulated conductor described above in conjunction with Figure 1 enables the current transformers 24, 26 to be threaded over the insulated conductors in a simple manner since the potential on the outer surfaces is close to earth. The cost of these current transformers 24, 26 is thus greatly reduced. Faults in the stator windings 2 can be detected with the aid of such low-voltage current transformers on the upper and lower sides of the stator windings.

Figure 3 illustrates the principle of voltage measurement on the stator winding of a synchronous machine with the aid of three branch-offs 28 and signal interfaces 30, 32, 34 for protection, measuring and control purposes. In a corresponding manner to the embodiment shown in Figure 2, the measuring and control equipment comprises a control system 32 with a voltage regulator 36 for the excitation system of the machine and a phasing equipment/turbine regular 34 controlled depending on the stator and measured voltage values recorded.

Limitation of the short-circuiting effect in the event of a fault is achieved with the aid of PTC material, and galvanic separation from the stator windings 2 is achieved with the aid of transformer connections 38 which must be dimensioned to manage the voltages drawn off. Alternatively this galvanic separation could be achieved using airgap reactors if phase angle compensation is necessary.

Current transformers 24, 26 with cable lead-throughs for current measurement are provided in this embodiment also.

While measurement with a separate measuring winding in accordance with Figure 2 is only possible when the machine is unloaded, measurement via branch-offs in accordance with Figure 3 offers the advantage that the machine voltage can also be measured when the machine is loaded.

Measurement by drawing off signals from one or more coil groups, as described in more detail below, is suitably effected via non-linear current-limiting resistors as a safety measure.

For measurement of the stator voltage with separate measuring windings as illustrated in Figure 2 the phase position must be the same for the voltage across the stator winding and across the measuring winding. Figure 4, ALTERNATIVE 1, shows an example in which a separate measuring winding is arranged in five coil groups, a transformer being arranged for voltage adjustment so that a measured signal of suitable magnitude is obtained, representing the stator voltage.

For this measurement the phase position for the total voltage of the stator winding, equal to Σphase voltages in Figure 5, ALTERNATIVE 1, which thus consists of the sum of the part voltages across the five coil groups, coincides with the resultant phase position of the measured signal, said measured signal

similarly being composed of five part voltages from each of the five coil groups, see Figure 5.

Figure 4, ALTERNATIVE 2, illustrates an alternative measuring procedure whereby the measuring winding is arranged in only one coil group, coil group 3, in which the phase position of the voltage coincides with the phase position of the total voltage of the stator winding. In this case also, therefore, the phase position of the measured signal will be the same as the phase position of the total voltage of the stator winding, as illustrated in Figure 5, ALTERNATIVE 2. In the embodiment according to Figure 4, ALTERNATIVE 2 the measuring winding is arranged in the coil group 3 in the middle of the stator winding.

With this embodiment with a separate measuring winding, the same phase position between stator voltage and measured signal can only be achieved when the machine is unloaded. An advantage with the embodiment according to Figure 4, with simple measuring windings and subsequent transformers to transfer the signal, is that the costs of expensive measuring transformers is eliminated.

Figures 6 and 7 illustrate measurements corresponding to those in Figures 4 and 5, performed by drawing off measured signals from the stator windings, cf. Figure 3. Figure 6, ALTERNATIVE 1, thus illustrates drawing off signals from a stator winding with five coil groups via measurement terminal 40, comprising non-linear current-limiting resistors 42, provided for safety reasons, and transformer 44. A total measured signal is thus obtained, representing the stator voltage across all five coil groups.

In this case also, the phase position, Σphase voltage, of the total stator voltage, constituting the sum of the part voltages across the coil group(s), must coincide with the phase position of the measured signal, the measured signal also being composed of five part voltages from each of the coil groups 1-5, see Figure 7, ALTERNATIVE 1.

Figure 6, ALTERNATIVE 2, shows an embodiment in which measurement is performed by drawing off on only one coil group, coil group 3, a fixed voltage having the same phase position as the phase position of the total voltage, Σphase voltage, of the stator winding, see Figure 7, ALTERNATIVE 2. In the embodiment shown in Figure 6, ALTERNATIVE 2, the coil group 3 consists of the middle one

of the coil groups 1-5 and measurement is performed via a measurement terminal 46 with current-limiting resistors 48 and transformer 50 in the same way as in Figure 6, ALTERNATIVE 1.

Figure 8 illustrates voltage measurement with the aid of two voltage transformers 52, 54, one on each side of the generator breaker GB. The voltages measured, together with the ON/OFF signal from the generator breaker GB, are used for relay protection, control and synchronizing purposes 56, 58 in analogous manner to that described in conjunction with Figures 2 and 3.

The main voltage UB is measured by the transformer 52 and the main voltage UA by the transformer 54. With the voltages UB and UA known, the third main voltage UC is also known, as illustrated at 60 in Figure 8.

With the breaker GB closed a traditional V-connection is obtained, i.e. the two measured voltages UB and UA are linked to each other, whereas with the breaker GB open measurements are performed separately on each side of the breaker GB. In this latter case, therefore, access is only available to main voltages on either side of the generator breaker GB. The ON and OFF signals from the generator breaker GB are thus used for switching between measuring modes.

At 62 the stator windings are shown with separate measuring windings 64, by which the stator voltages are sensed and corresponding measured signals withdrawn via transformers 65 as described above.

Figure 9 shows a modification of the embodiment shown in Figure 8, in which voltage measurement is performed with the aid of three voltage transformers 66, 68, 70, one voltage transformer 66 on one side of the generator breaker GB and two voltage transformers 68, 70 on the other side of the generator breaker GB. ON/OFF signals from the generator breaker GB are used for switching between measuring modes in this case also. With the generator breaker GB closed a three-phase connection is obtained for voltage measurement, see at 72 in the figure, and with the generator breaker GB open a V-connected measuring group is obtained. Thus in this embodiment the signal from the generator breaker GB is utilized for switching between a V-connected measuring mode and a measuring mode based on three main voltages.

In other respects this embodiment agrees with the embodiment shown in Figure 8.

Figure 10 shows the course of time for the two main voltages UA and UB according to Figures 8 and 9. φ illustrates the angle between these voltages UA, UB and an angle difference of φ = 120 electrical degrees indicates that the phase voltages on either side of the generator breaker GB have similar phase positions and phasing, i.e. closing of the generator breaker GB may be effected.

φ is suitably determined by time measurement, e.g. by pulse counting with the use of a crystal-controlled clock. Time measurement is activated, for instance, upon passage of zero and positive flank on the voltage UA and ceases upon passage of zero and positive flank on the voltage UB. The time measured, measured as number of pulses as above, is related to the number of pulses for the whole time period for UA, whereupon calculation to electrical degrees or radians is performed.

Figure 11 shows the angular difference φ as a function of the time while the breaker is open, the frequency difference between the voltages UA and UB is constant and UA is used as reference. The frequency of voltage UA is designated fa and the frequency of UB fb. For fa greater than fb the angle φ increases in the beat time T, whereas for fa smaller than fb the angle φ decreases in the beat time T, as shown in the figure. To compensate for the breaker's moving time, t_d, switching in of the breaker should occur at a calculated connect angle, $\varphi_{connect}$ so as to take into consideration the above circumstances.

Figure 12 illustrates the phasing function based on measured signals representing the main voltages UA and UB phase-shifted 120 electrical degrees. The measured main voltages UA and UB are thus supplied to an input step 74 in which the frequencies fa, fb and the phase angle φ between UA and UB are determined.

In block 76 the frequencies fa and fb are compared and the magnitude x_{td} for compensation of the breaker switching time t_d is calculated with the aid of simple trigonometric proportioning. x_{td} is thus obtained from

$$x_{td} = 360^{o} \times t_d/T = 360 \times t_d \times | fa - fb |$$

where T = frequency-dependent beat time = 1/(|fa-fb|).

The connect angle $\varphi_{connect}$ is thus continuously determined and updated for adjustment to variations in frequency and thus also variations in beat time T.

The connect angle $\varphi_{connect}$ continuously updated in the units 80 is compared in the comparator 78 with the angle φ between voltages UA and UB measured in the input step 74.

In addition to the output signal from the comparator 78, a signal from a circuit 84 for monitoring the derivative of fa, fb and φ and also from a circuit 86 for monitoring frequency and voltage levels measured in the input step 74, are supplied to an AND gate 82. The conditions for breaker switching $\varphi = \varphi_{connect}$ are fulfilled if the signals are within permissible limits.

The present invention enables a reduction of the number of voltage transformers necessary for protection, control (= synchronization) and control of a synchronous machine.

Numerous modifications and variations of the embodiments described above are of course possible within the scope of the invention. For instance, the measurements can be performed on an optional coil group, e.g. the first coil group, and necessary phase shift of the measured signal can be achieved with the aid of reactors or electronic filters, for instance.

The Swedish Patent Office
PCT International Application

PCT/ SE 98/ 01739
27 -12- 1999

AMENDED CLAIMS

1. A rotating synchronous machine intended for direct connection to a distribution or transmission network, **characterized** in that at least one stator winding of the machine comprises at least one electric conductor (35), a first layer (13) with semiconducting properties surrounding the conductor, a solid insulating layer (37) surrounding the first layer, and a second layer (15) with semiconducting properties surrounding the insulating layer, and in that measuring means are arranged to sense the voltage in the stator winding.

2. A machine as claimed in claim 1, **characterized** in that the potential of the first layer is substantially similar to the potential of the conductor.

3. A machine as claimed in claim 1 or claim 2, **characterized** in that the second layer is arranged to form a substantially equipotential surface surrounding the conductor.

4. A machine as claimed in claim 3, **characterized** in that the second layer is connected to a predetermined potential.

5. A machine as claimed in claim 4, **characterized** in that said predetermined potential is earth potential.

6. A machine as claimed in any of the preceding claims, **characterized** in that at least two adjacent layers of the machine winding have substantially the same coefficients of thermal expansion.

7. A machine as claimed in any of the preceding claims, **characterized** in that the conductor comprises a number of strands, at least some of which are in electrical contact with each other.

AMENDED SHEET

8. A machine as claimed in any of the preceding claims, **characterized** in that each of said three layers is firmly joined to adjacent layers along substantially its whole contact surface.

9. A machine as claimed in any of the preceding claims, **characterized** in that said layers are arranged to adhere to each other even when the insulated conductor is bent.

10. A rotating synchronous machine intended for direct connection to a distribution or transmission network, **characterized** in that at least one stator winding of the machine is formed of a cable comprising one or more current carrying conductors, each conductor having a number of strands, an inner semiconducting layer arranged around each conductor, an insulating layer of solid insulating material arranged around said inner semiconducting layer, and an outer semiconducting layer arranged around the insulating layer, and in that measuring means are arranged to sense the voltage in the stator winding.

11. A machine as claimed in claim 10, **characterized** in that said cable comprises a sheath.

12. A machine as claimed in any of the preceding claims, **characterized** in that the measuring means comprise one measuring winding per phase, arranged in the stator winding of the machine.

13. A machine as claimed in any of the preceding claims, **characterized** in that the measuring means are connected to signal interfaces for protection, measuring and control equipments for the machine.

14. A machine as claimed in any of the preceding claims, **characterized** in that the measuring means comprise at least one branch-off in a stator winding for determining the machine voltage from a measured signal drawn off.

The Swedish Patent Office
PCT International Application

PCT/SE98/01757
27 -12- 1999

15. A machine as claimed in claim 13, **characterized** in that one branch-off is arranged for each phase.

16. A machine as claimed in claim 13 or claim 14, **characterized** in that the branch-offs are connected to signal interfaces for protection, measuring and control equipments for the machine, transformer connections or airgap reactors being arranged to galvanically separate the branch-offs from said equipments.

17. A machine as claimed in any claims 14-16, **characterized** in that a reactor is connected to each branch-off in order to shift the phase of the measured signal to coincide with the phase position of the total voltage of the stator winding.

18. A machine as claimed in any of claims 14-16, **characterized** in that electronic filters are arranged to shift the phase of the measured signals to coincide with the phase position of the total voltage of the stator winding.

19. A machine as claimed in any of claims 14-18, **characterized** in that the branch-offs comprise non-linear current limiting resistors.

20. A machine as claimed in any of the preceding claims, **characterized** in that the measuring means comprise at least one measuring winding arranged to measure the voltage across all coil groups of the stator winding, the measuring winding being connected to a transformer for voltage adjustment of the measured signal.

21. A machine as claimed in any of claims 1-19, **characterized** in that the measuring means comprise at least one measuring winding arranged to measure the voltage across one coil group of the stator winding, the voltage of said coil group having the same phase position as the total voltage of the stator winding.

AMENDED SHEET

The Swedish Patent Office
PCT International Application

22. A machine as claimed in any of claims 14-19, **characterized** in that the branch-off is arranged to draw off the voltage across all coil groups of the stator winding.

23. A machine as claimed in any of claims 14-19, **characterized** in that the branch-off is arranged to draw off the voltage across one coil group of the stator winding, the voltage of said coil group having the same phase position as the total voltage of the stator winding.

24. A machine as claimed in any of the preceding claims, **characterized** in that current transformers for low voltage and designed for cable lead-through are placed on the upper and lower side of the stator windings for current measuring.

25. A machine as claimed in any of the preceding claims, the machine being connected to the network via a circuit breaker, **characterized** in that a switching module controlled by the signals from the breaker is arranged, depending on the position of the circuit breaker, to switch between a position for measuring the measuring voltage on the stator windings and a position for measuring the network voltage for forwarding the voltages in question to subsequent equipments.

26. A machine as claimed in claim 25, **characterized** in that the measuring means comprise a measuring transformer connected between different main voltages on each side of the circuit breaker.

27. A machine as claimed in claim 25 or claim 26, **characterized** in that the switching module is arranged, depending on the ON/OFF signal of the circuit breaker, to switch the measuring mode of protection and control equipments connected to the measuring transformers between a V-connected measuring mode and a measuring mode based on the main voltage.

AMENDED SHEET

The Swedish Patent Office
PCT International Application

PCT/ SE 9 8 / 0 1 7 3 9
2 7 -12- 1999

28. A machine as claimed in any of claims 25-27, **characterized** in that the measuring means comprise three measuring transformers connected between different main voltages in order to measure them, two measuring transformers being arranged on one side of the circuit breaker and the third measuring transformer on the other side of the breaker.

29. A machine as claimed in claim 28, **characterized** in that a switching module is arranged, depending on the ON/OFF signal of the circuit breaker, to switch the measuring mode of protection and control equipments connected to the measuring transformers between a V-connected measuring mode and a measuring mode based on three main voltages.

30. A machine as claimed in any of claims 26-29, **characterized** in that means are provided to determine the angular position between two main voltages for determining the connect angle at which the circuit breaker shall be switched in.

31. A machine as claimed in claim 30, **characterized** in that said means comprise chronometric members for determining the time between a predetermined point in the two main voltages.

32. A machine as claimed in any of claims 26-31, **characterized** in that a unit is arranged to determine a connect angle ($\varphi_{connect}$) from two measured main voltages at which the circuit breaker shall be switched in at frequency variations compensated for by the breaker's switching time, which unit is arranged to adaptively adjust the connect angle ($\varphi_{connect}$) by means of trigonometric proportioning.

33. A method for measuring the voltage in the stator winding of a rotating synchronous machine intended for direct connection to a distribution or transmission network, wherein at least one stator winding of the machine comprises at least one electric conductor (35), a first layer (13) with semiconducting properties surrounding the conductor, a solid insulating layer (37)

surrounding the first layer, and a second layer (15) with semiconducting properties surrounding the insulating layer, and wherein measuring means are arranged to sense the voltage in the stator winding, **characterized** in that the phase of a measured signal is shifted to coincide with the phase position of the total voltage of the stator winding.

34. A method as claimed in claim 33, **characterized** in that the voltage is measured across all coil groups of the stator winding.

35. A method as claimed in claim 33, **characterized** in that the voltage is measured across one coil group of the stator winding, the voltage of which having the same phase position as the total voltage of the winding.

Fig. 1

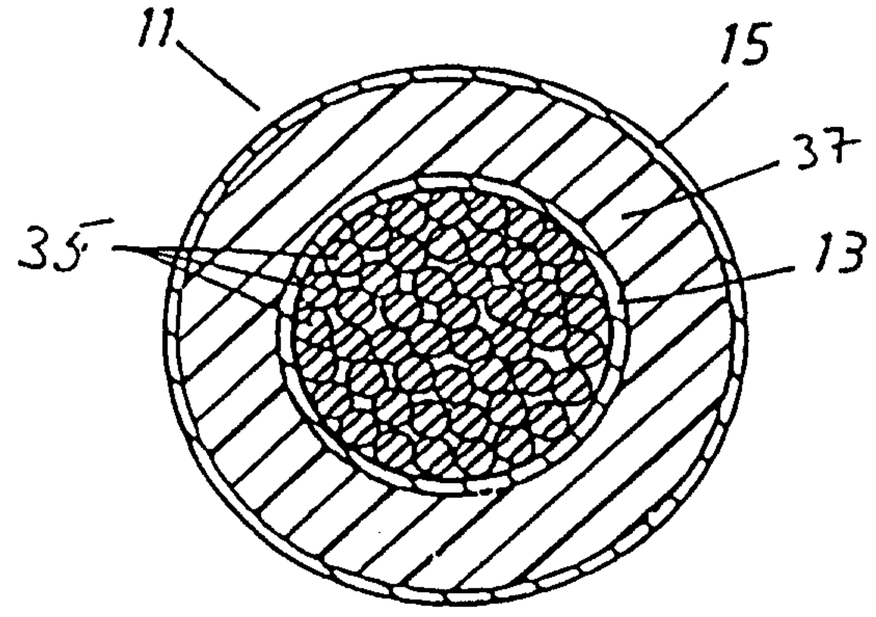

Fig. 2

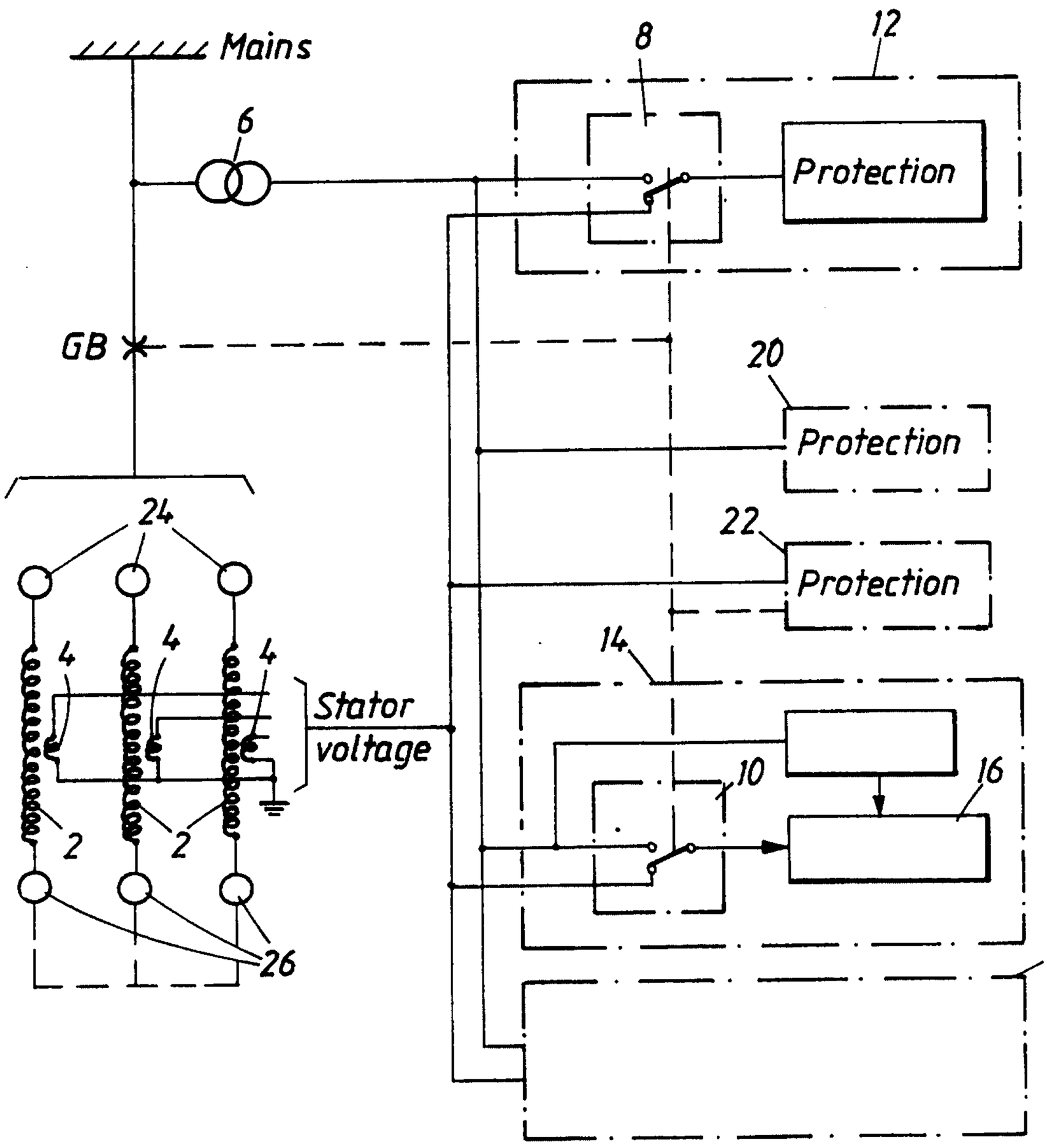
Mains
6
GB
24
4
4
4
2
2
26
Stator voltage
8
12
Protection
20
Protection
22
Protection
14
10
16
18

Fig. 3

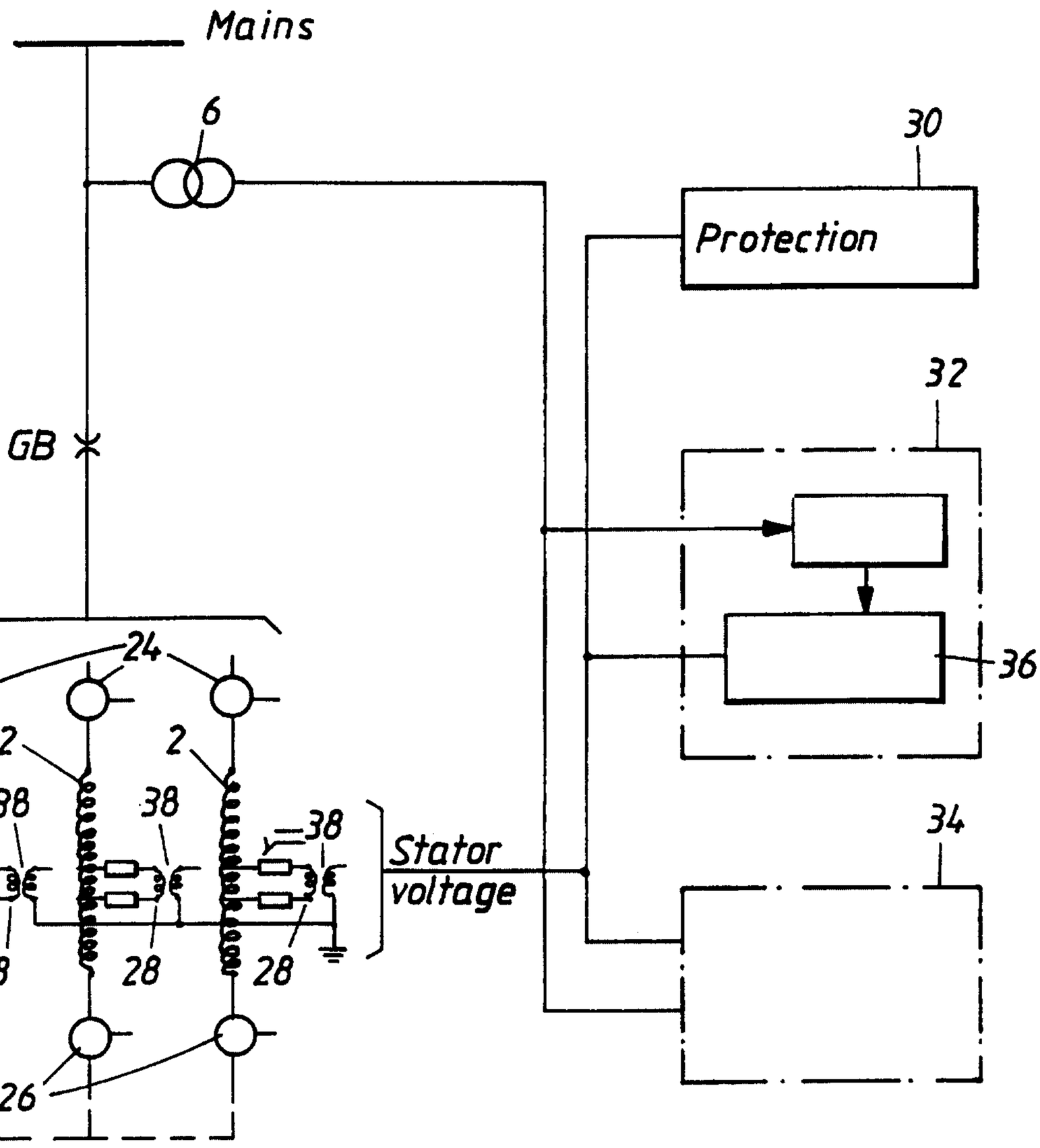
Mains
6
GB
24
2
2
38
38
38
28
28
28
26
Stator voltage
30
Protection
32
36
34

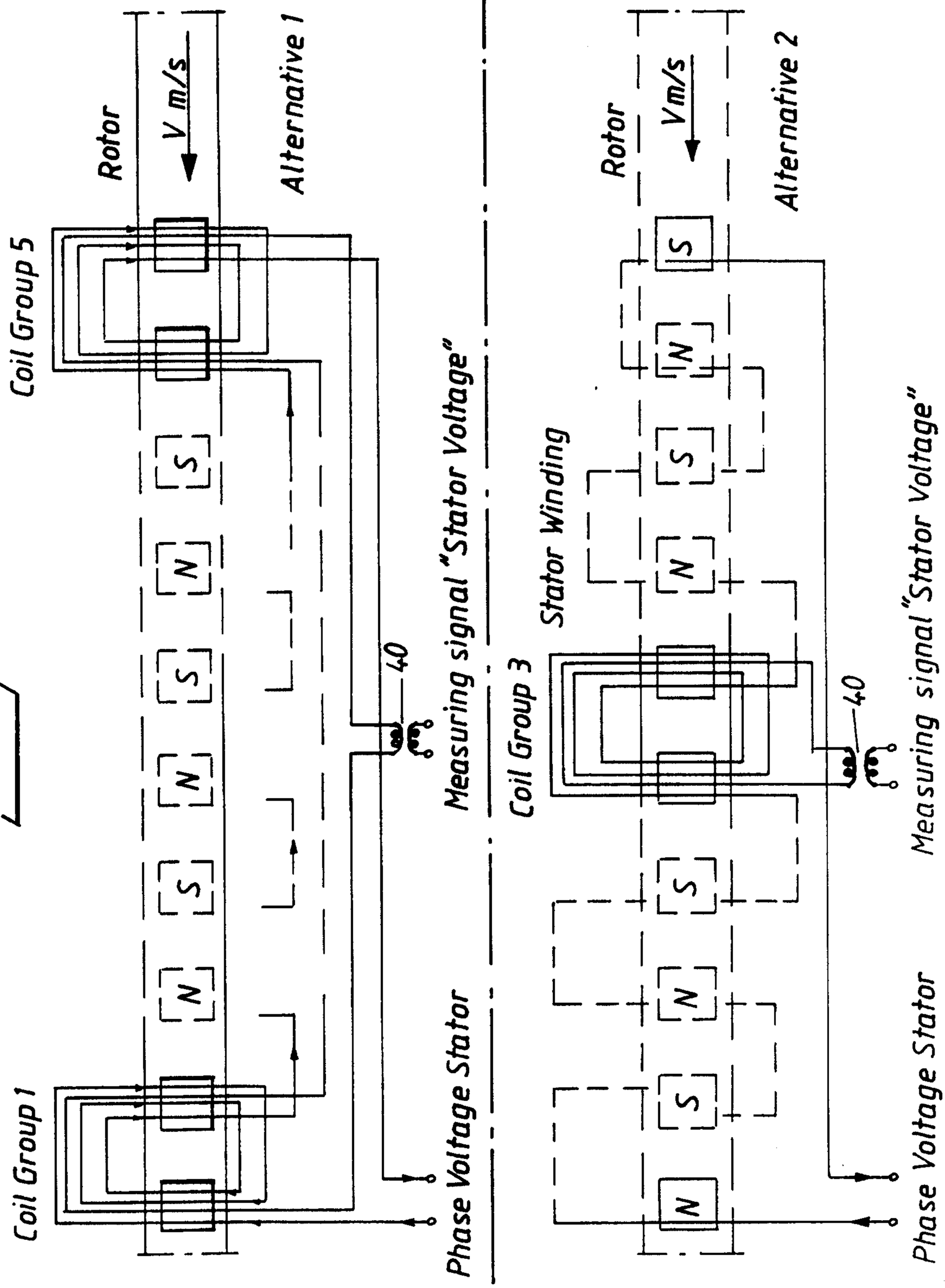
Coil Group 5
Rotor
V m/s
Alternative 1
S
N
S
N
S
N
40
Measuring signal "Stator Voltage"
Coil Group 1
Phase Voltage Stator
Coil Group 3
Stator Winding
Rotor
V m/s
Alternative 2
S
N
S
N
S
N
40
Measuring signal "Stator Voltage"
Phase Voltage Stator

Fig 4

Fig. 5

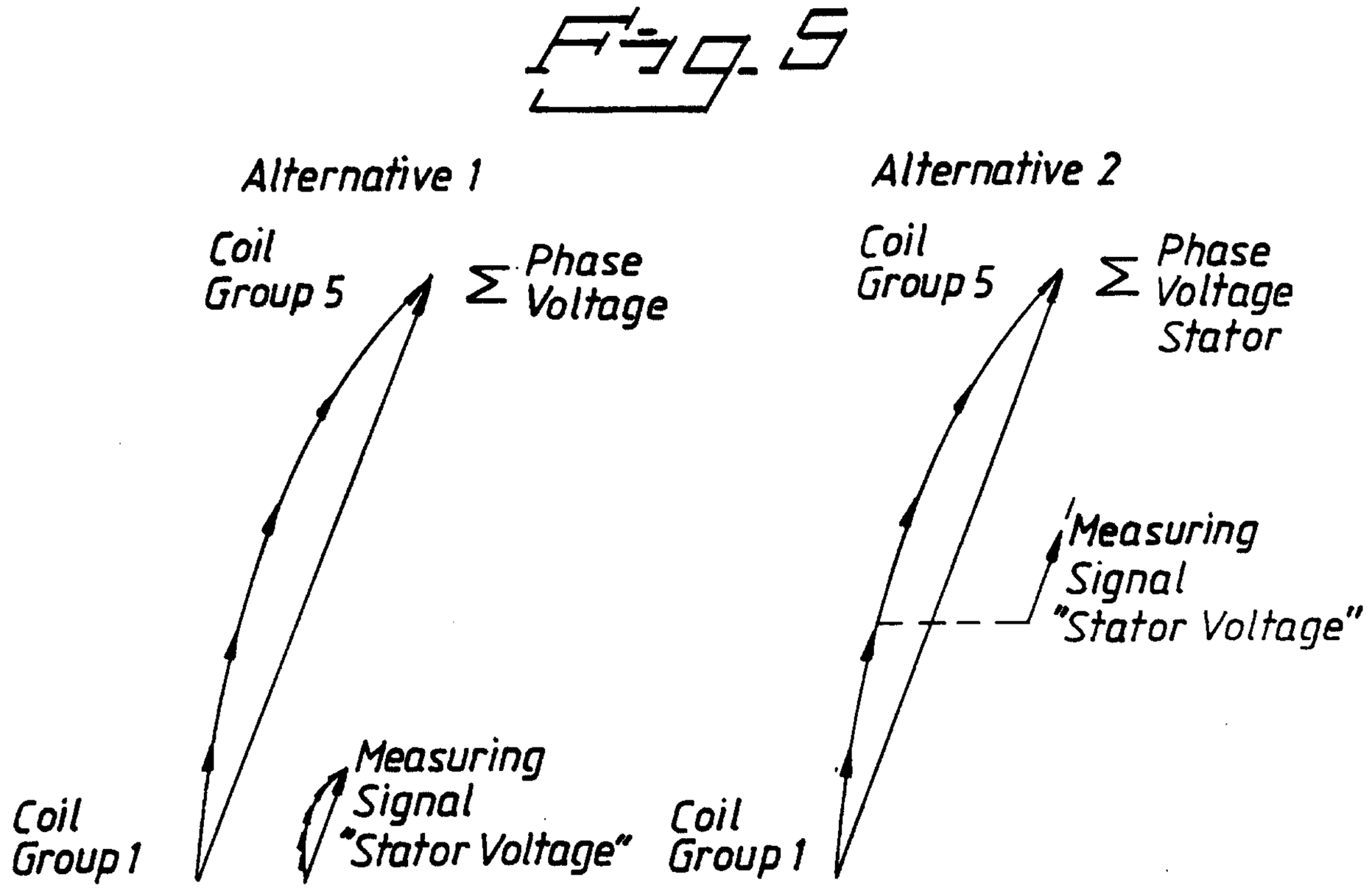
Alternative 1
Coil Group 5
Σ Phase Voltage
Measuring Signal "Stator Voltage"
Coil Group 1
Alternative 2
Coil Group 5
Σ Phase Voltage Stator
Measuring Signal "Stator Voltage"
Coil Group 1

Fig. 7

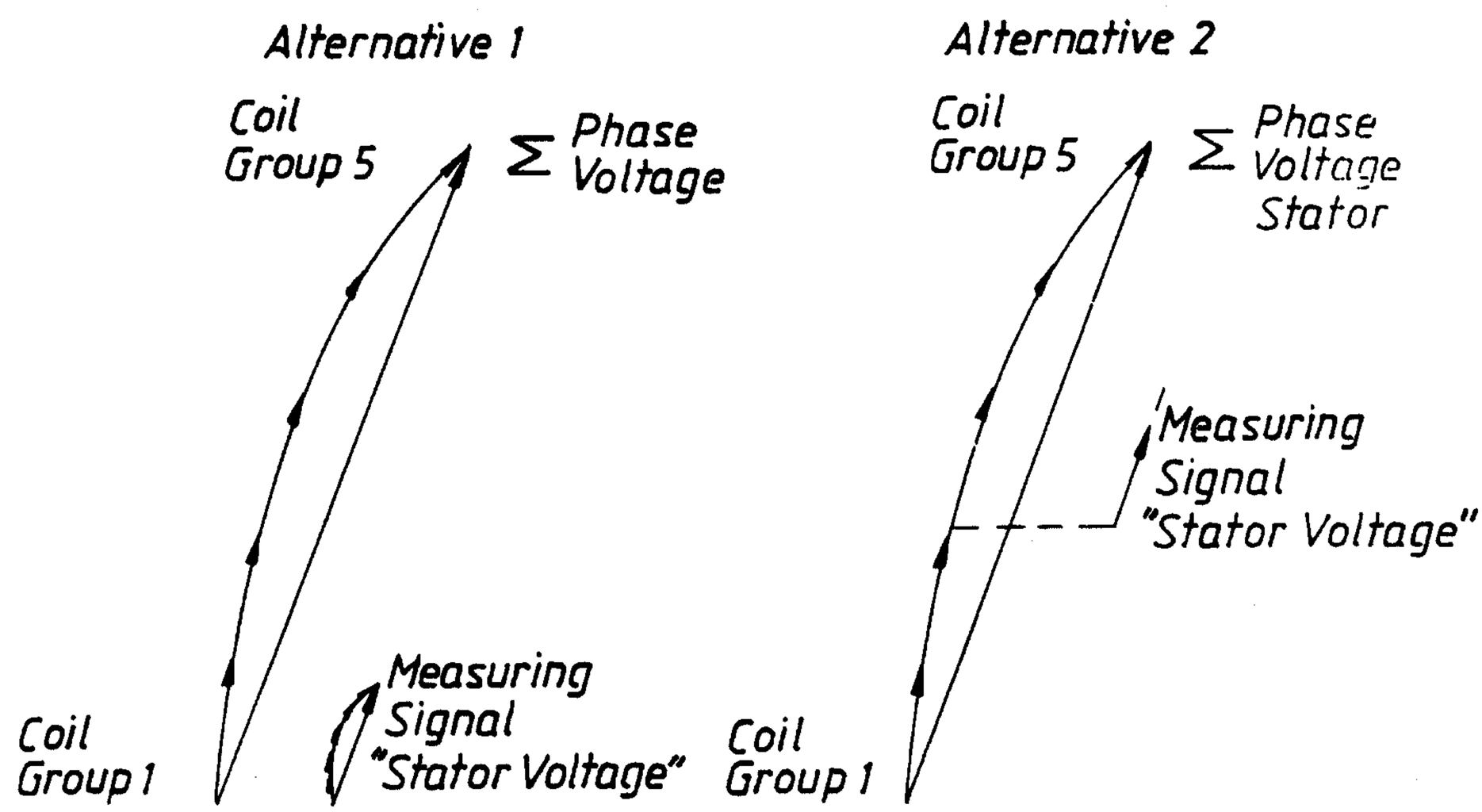
Alternative 1
Coil Group 5
Σ Phase Voltage
Measuring Signal "Stator Voltage"
Coil Group 1
Alternative 2
Coil Group 5
Σ Phase Voltage Stator
Measuring Signal "Stator Voltage"
Coil Group 1

Fig. 6

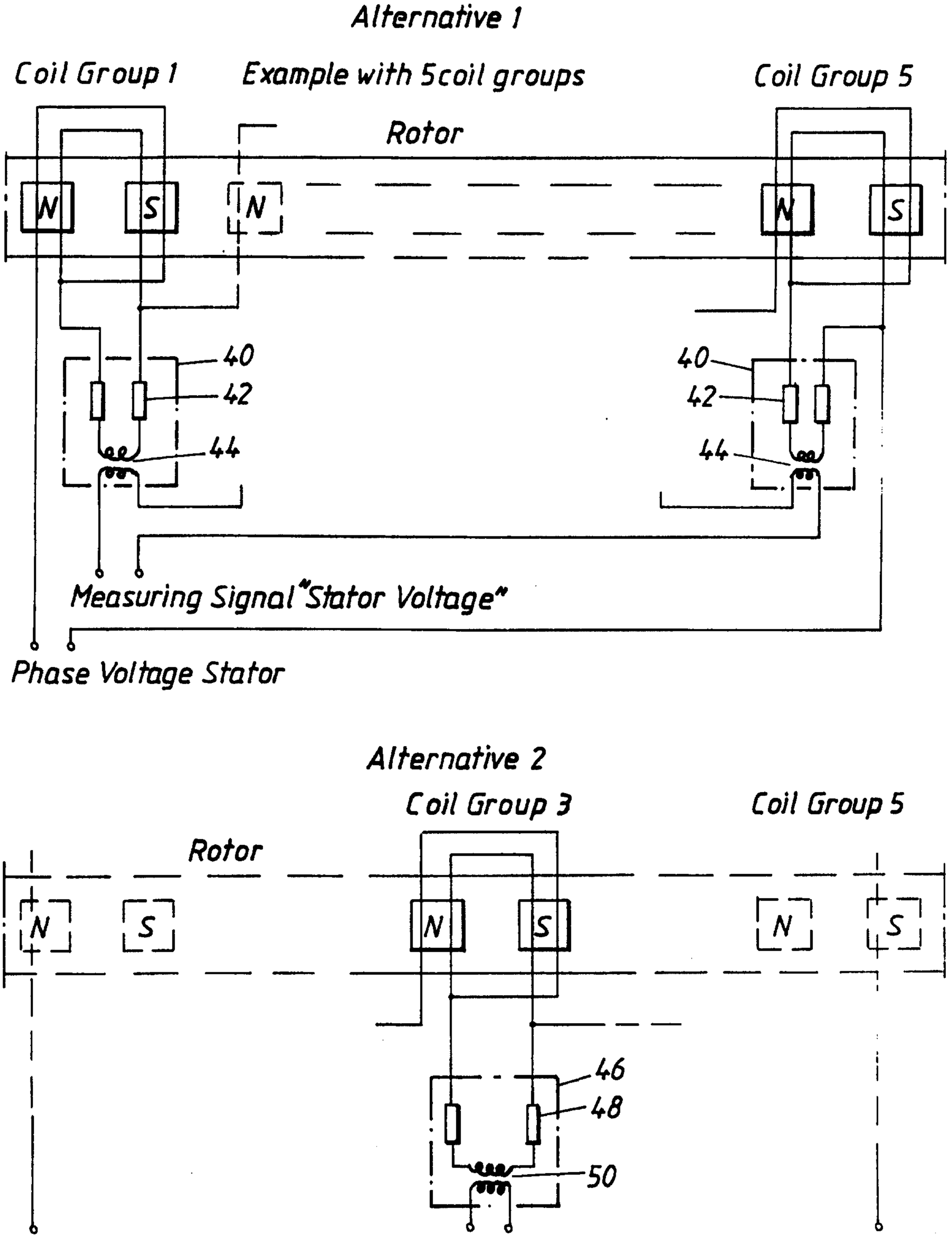
Alternative 1
Coil Group 1
Example with 5coil groups
Coil Group 5
Rotor
N
S
N
N
S
40
42
44
40
42
44
Measuring Signal "Stator Voltage"
Phase Voltage Stator
Alternative 2
Coil Group 3
Coil Group 5
Rotor
N
S
N
S
N
S
46
48
50
Phase Voltage Stator
Measuring signal "Stator Voltage"

Fig. 8

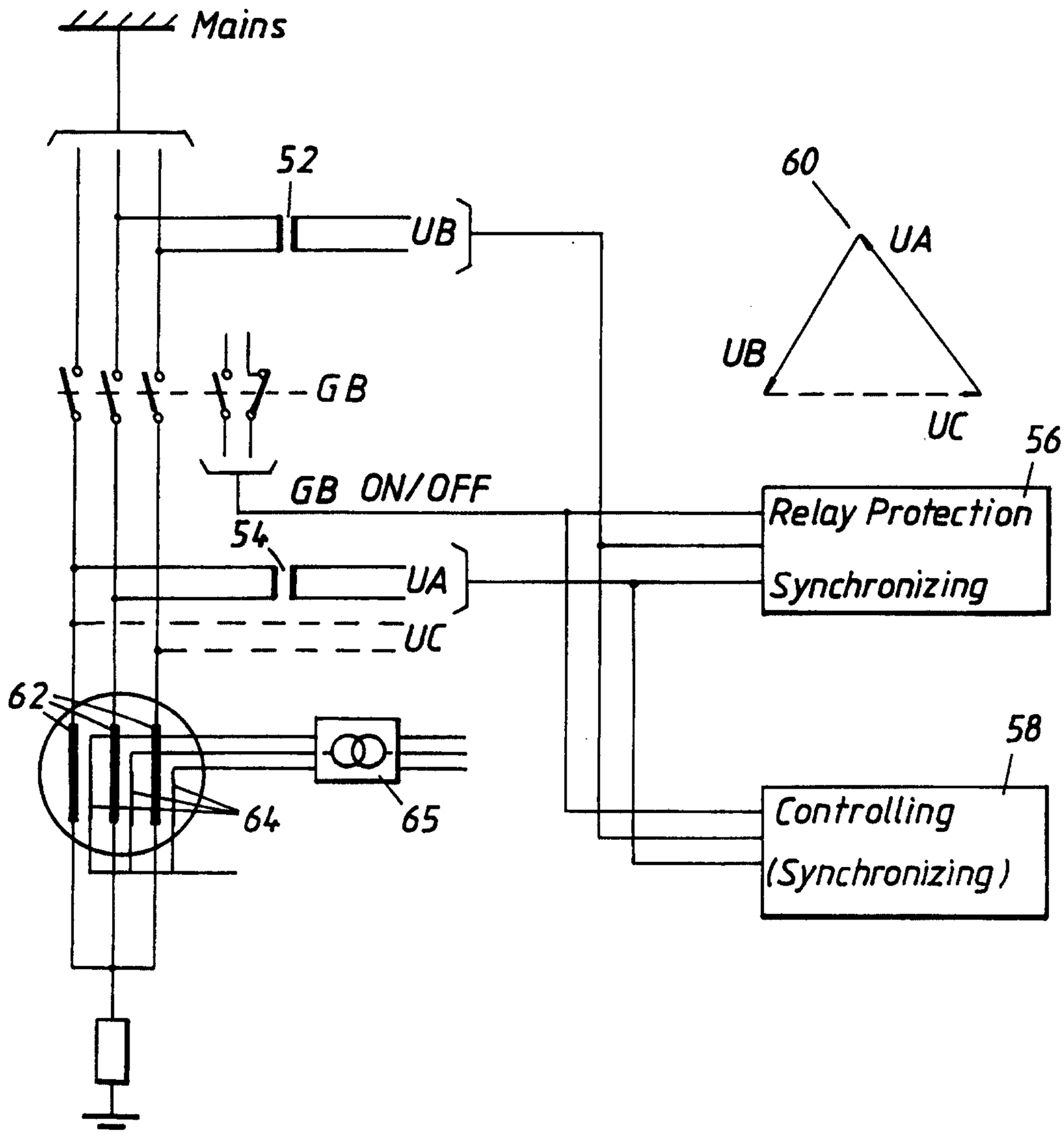
Mains
52
UB
60
UA
UB
UC
GB
GB ON/OFF
56
Relay Protection
Synchronizing
54
UA
UC
62
64
65
58
Controlling
(Synchronizing)

Fig. 9

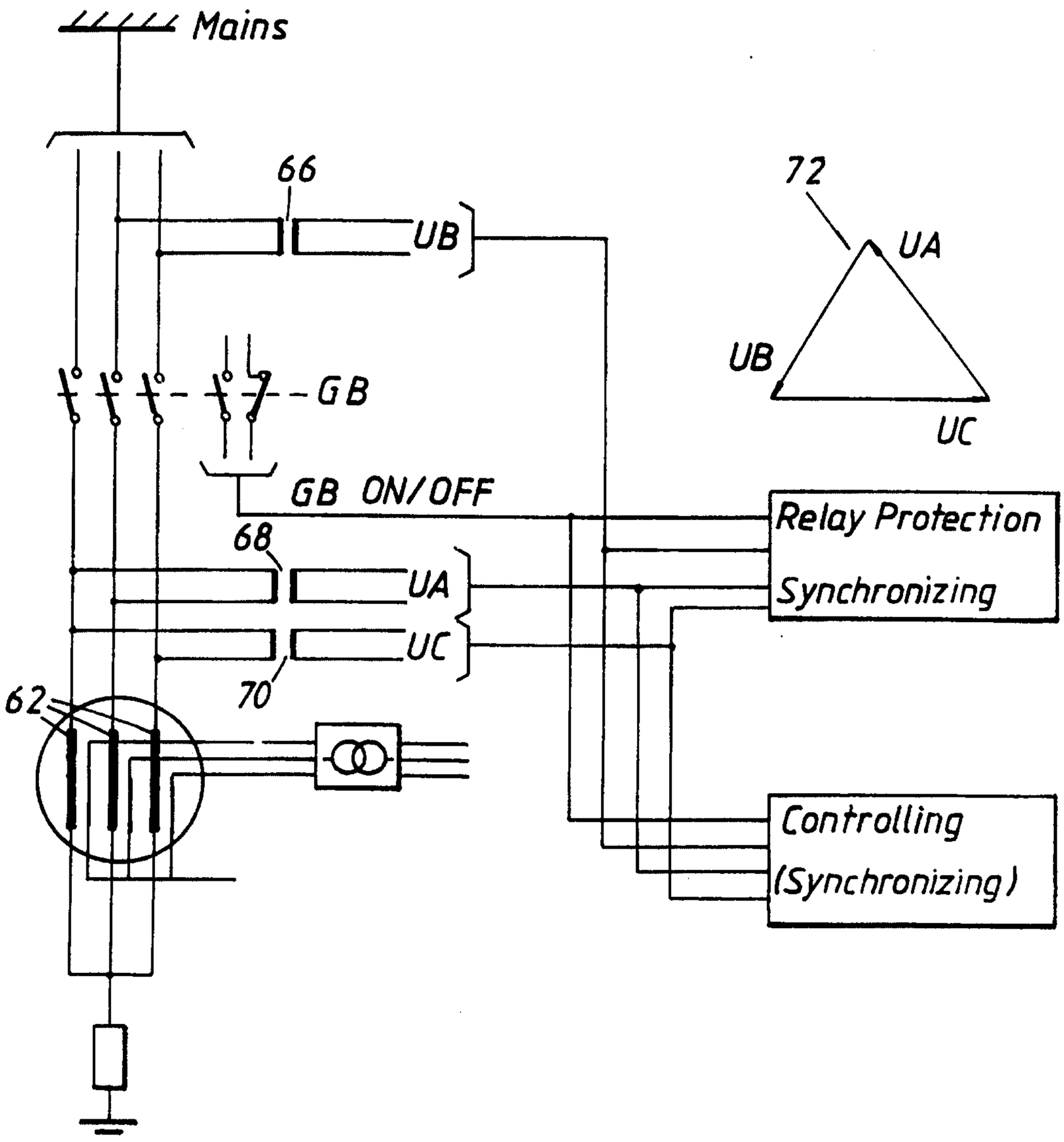
Mains
66
UB
GB
GB ON/OFF
68
UA
UC
70
62
72
UA
UB
UC
Relay Protection
Synchronizing
Controlling
(Synchronizing)

Fig. 10

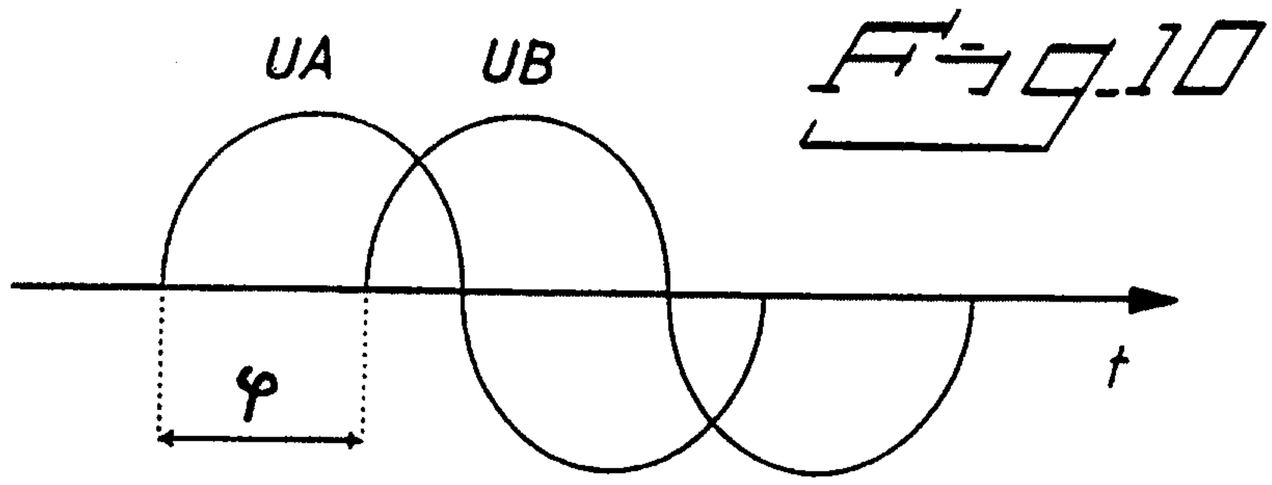

Fig. 11

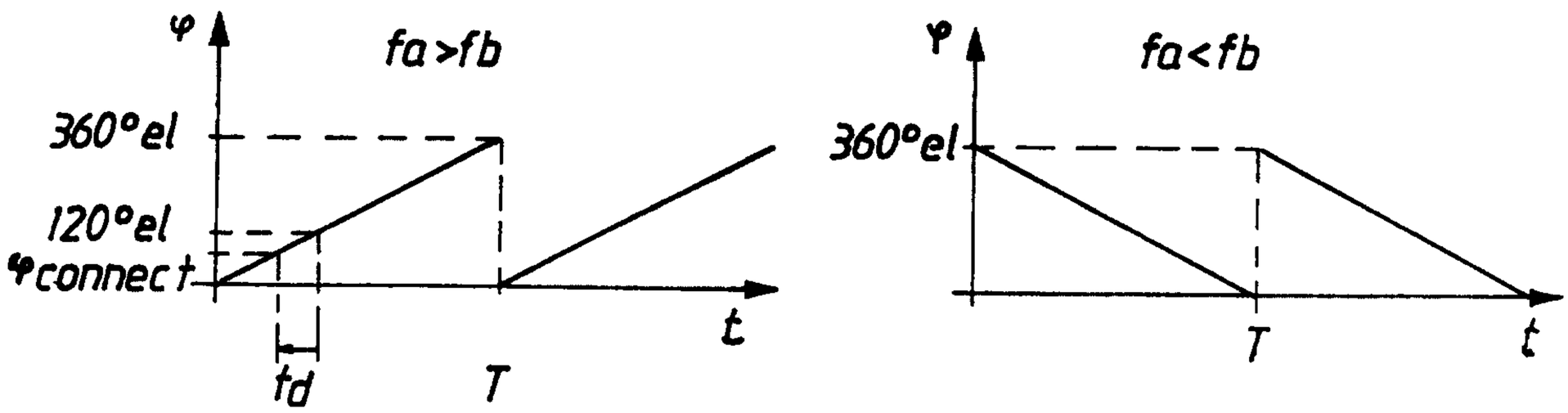

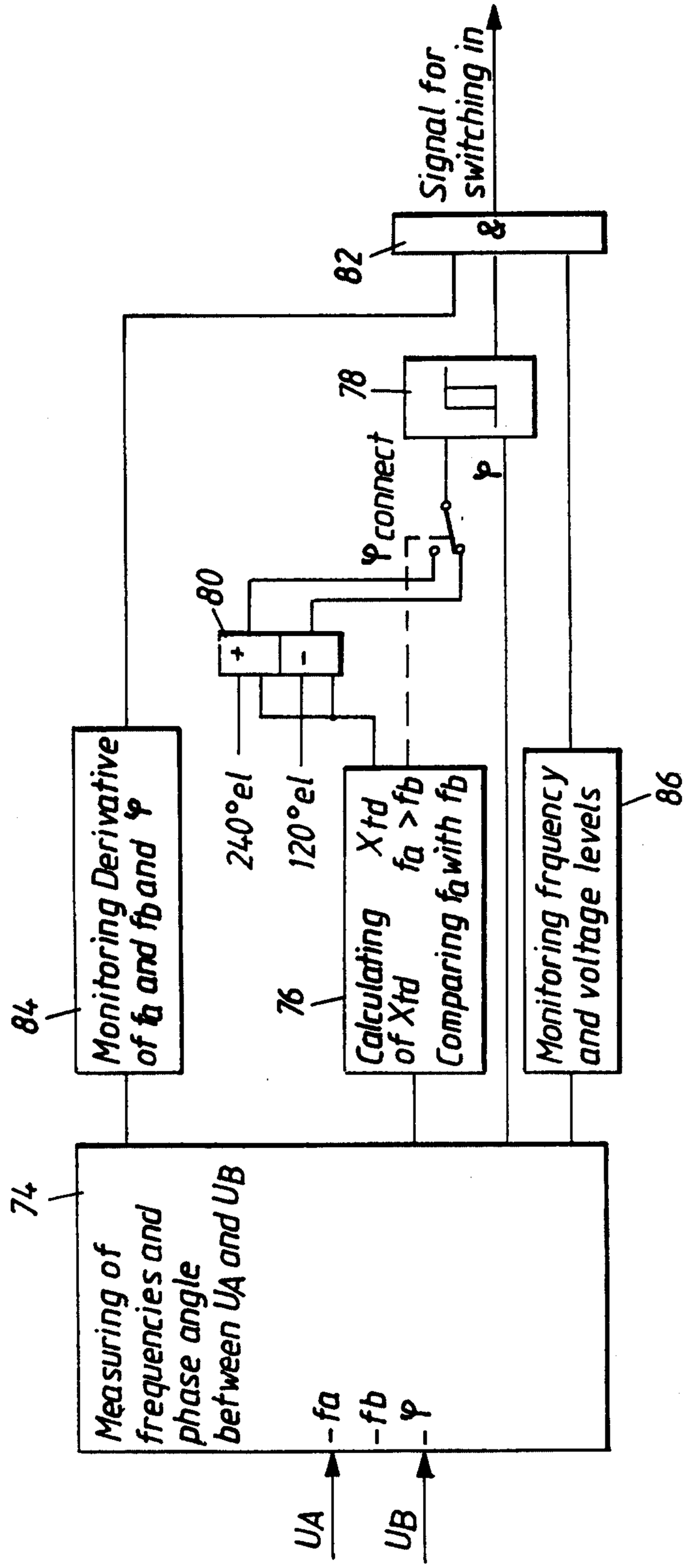
Signal for switching in
82
&
78
P
Pconnect
80
+
-
240°el
120°el
84
Monitoring Derivative of fa and fb and P
76
Calculating Xtd
Xtd fa > fb
Comparing fa with fb
Monitoring frquency and voltage levels
86
74
Measuring of frequencies and phase angle between UA and UB
- fa
- fb
- P
UA
UB

Fig. 12