No. 731,185. PATENTED JUNE 16, 1903

H. W. HORST & C. J. WEBER.

WINDOW OPERATING DEVICE.

APPLICATION FILED OCT. 9, 1902.

NO MODEL. 2 SHEETS—SHEET 1.

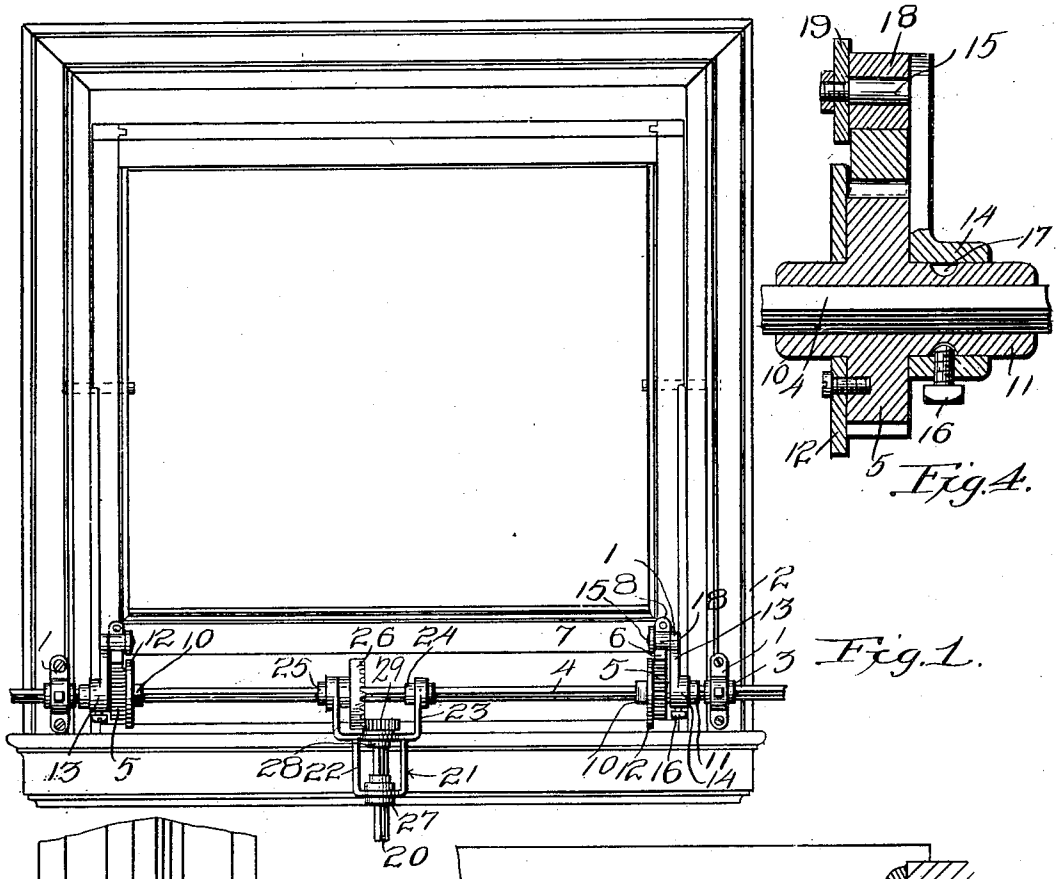

Fig. 1.

Fig. 4.

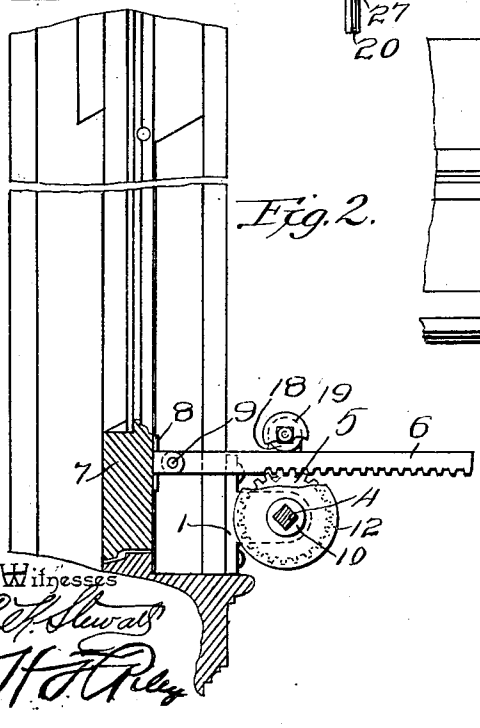

Fig. 2.

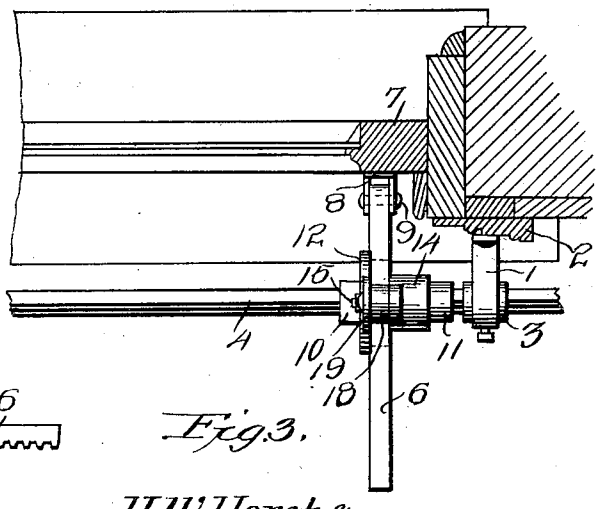

Fig. 3.

Witnesses
E. C. Stewart
H. A. Riley

H. W. Horst and C. J. Weber,
Inventors.
by C. A. Snow & Co
Attorneys

THE NORRIS PETERS CO., PHOTO-LITHO., WASHINGTON, D. C.

No. 731,185. PATENTED JUNE 16, 1903.

H. W. HORST & C. J. WEBER.

WINDOW OPERATING DEVICE.

APPLICATION FILED OCT. 9, 1902.

NO MODEL. 2 SHEETS—SHEET 2.

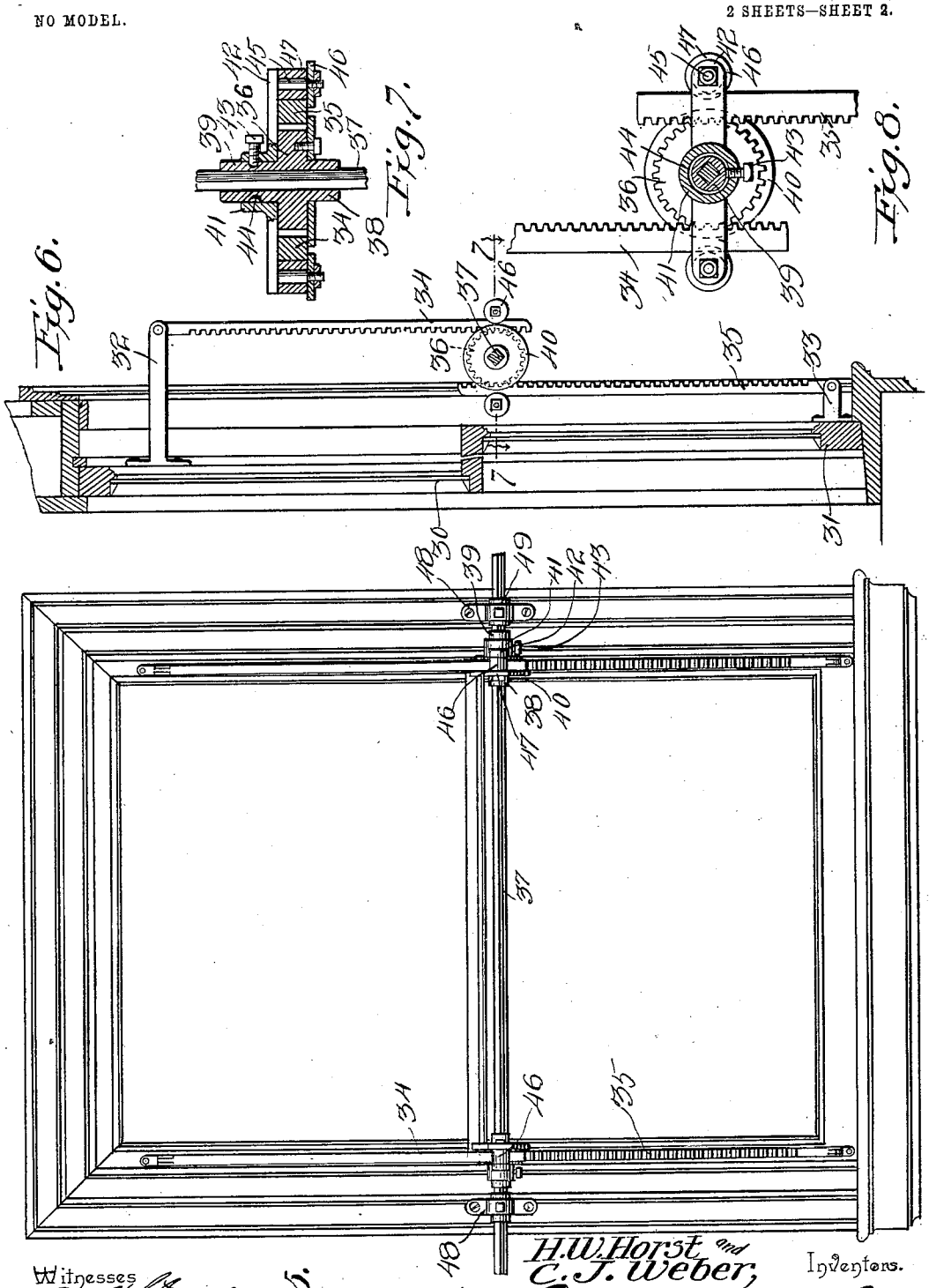

Witnesses
E. K. Stewart
H. F. Riley

H. W. Horst and C. J. Weber, Inventors.
by C. A. Snow & Co.
Attorneys

THE NORRIS PETERS CO., PHOTO-LITHO., WASHINGTON, D. C.

No. 731,185. Patented June 16, 1903.

UNITED STATES PATENT OFFICE.

HARRY WEAVER HORST AND CYRUS JEFFREY WEBER, OF MIDDLETOWN, PENNSYLVANIA.

WINDOW-OPERATING DEVICE.

SPECIFICATION forming part of Letters Patent No. 731,185, dated June 16, 1903.

Application filed October 9, 1902. Serial No. 126,611. (No model.)

To all whom it may concern:

Be it known that we, HARRY WEAVER HORST and CYRUS JEFFREY WEBER, citizens of the United States, residing at Middletown, in the county of Dauphin and State of Pennsylvania, have invented a new and useful Window-Operating Device, of which the following is a specification.

The invention relates to improvements in window-operating devices.

The object of the present invention is to improve the construction of window-operating mechanisms and to provide simple and comparatively inexpensive gearing of great strength and durability adapted to be readily applied to a window and capable of operating pivoted, slidable, and other movable sashes.

The invention consists in the construction and novel combination and arrangement of parts hereinafter fully described, illustrated in the accompanying drawings, and pointed out in the claims hereto appended.

In the drawings, Figure 1 is an elevation of a window provided with operating mechanism constructed in accordance with this invention and showing the same applied to a pivoted sash. Fig. 2 is a vertical sectional view of the same. Fig. 3 is a horizontal sectional view of one side of the window. Fig. 4 is an enlarged detail sectional view illustrating the manner of mounting the gearing on the squared chair. Fig. 5 is an elevation of a window, showing the operating mechanism applied to vertically-movable sashes. Fig. 6 is a vertical sectional view of the same. Fig. 7 is a sectional view on the line 7 7 of Fig. 6. Fig. 8 is an enlarged detail view of the gear-wheel and the opposite rack-bars.

Like numerals of reference designate corresponding parts in all the figures of the drawings.

1 1 designate suitable bearing-brackets mounted on a window-frame 2 at opposite sides thereof and provided with circular openings for the reception of bearing-sleeves 3 of a transverse shaft 4, which is square, as clearly illustrated in Fig. 2 of the drawings, but which may be of any other polygonal form. The sleeve 3, which may be secured to the shaft in any suitable manner, has its opening conforming to the configuration of the same, and it may be retained in the bearing-opening of the bracket 1 by any suitable means, such as a set-screw and an annular groove or the like.

Mounted on the squared shaft are gear-wheels 5, located at opposite sides of the window and meshing with rack-bars 6, which are connected with a pivoted sash 7 and which are adapted to be reciprocated by the gear-wheels to swing the sash for opening and closing the window. The sash is provided at opposite sides with suitable brackets 8, having perforated ears arranged in pairs and receiving the adjacent ends of the rack-bars, which are connected with the ears by suitable pivots 9. Each gear-wheel is provided with opposite hub extensions 10 and 11, and it has a squared opening to conform to the configuration of the shaft 4. The hub extension 10 is squared or rectangular in cross-section and receives a disk or collar 12, secured to the polygonal extension 10 by any suitable means and projecting outward beyond the teeth of the gear-wheel to hold the adjacent rack-bar against lateral movement to prevent the same from becoming displaced. The other hub extension 11 of the gear-wheel is cylindrical to receive a guide-arm 13, provided at its inner end with an eye 14 and having a pivot 15 at its outer end. The eye of the guide has a threaded perforation for the reception of a set-screw 16, which passes one side of the eye and extends inward through the same for engaging an annular groove 17 of the cylindrical hub extension of the gear-wheel. An antifriction-roller or gear-wheel 18 is mounted on the pivot 15 for engaging the smooth upper face of the rack-bar, which is provided at its lower face with teeth, and a disk or washer 19 is secured to the outer end of the pivot to form a projecting flange for engaging the adjacent side face of the rack-bar; but a grooved wheel or roller may be employed, if desired. The gear-wheels are readily adjusted longitudinally of the squared transverse shaft, and it is unnecessary to perforate the gear-wheels or socket or perforate the shaft for fixing the gear-wheels to the shaft, and the construction is

much stronger than those devices in which the gearing is secured to the shaft by a clamping screw or key.

The shaft is operated by a short shaft 20, arranged at right angles to the transverse shaft and mounted in a bracket 21, consisting of an approximately rectangular portion 22 and L-shaped arms 23. The L-shaped arms 23 are provided with bearing-openings to receive a sleeve 24 and a hub extension 25 of the gear-wheel 26, the sleeve and the gear-wheel being provided with square openings to conform to the configuration of the transverse shaft. The rectangular portion 22 is provided with bearing-openings for the reception of a sleeve 27 and a hub extension 28 of a pinion 29, which meshes with the gear-wheel 26. The gear-wheel 26 is provided at one of its faces with teeth to mesh with the teeth of the pinion. The pinion has its teeth arranged at its outer side, as shown in Fig. 1. The gear-wheel is provided at the inner portion of its hub extension with a shoulder for engaging the inner face of the adjacent arm of the bearing-bracket 21, and the pinion is also provided with a similar shoulder for engaging the inner end of the rectangular portion of the bearing-bracket, the outer end of the rectangular portion of the bracket being engaged by a shoulder of the sleeve. The short operating-shaft may be rotated by the operation of a crank or any other suitable means, and the gearing (shown in Fig. 1) may be mounted at any other desired point for operating the pivoted sash or a similar pivoted element.

In Fig. 5 of the drawings is illustrated an operating device for simultaneously raising and lowering upper and lower sashes 30 and 31, provided with upper and lower arms 32 and 33, formed integral with plates or brackets and arranged in pairs, as shown in Figs. 5 and 6. The outer ends of the arms of the brackets are connected by suitable fastening devices with upper and lower rack-bars 34 and 35, located at opposite sides of gear-wheels 36 and adapted to be reciprocated when the same are rotated. The gear-wheels are mounted on a squared transverse shaft 37 and are provided with hub extensions 38 and 39, constructed similar to those before described. The hub extension 38 is squared to receive a disk or collar 40, and the other hub extension 39 is cylindrical to receive an eye 41 of a guide 42, which is provided with oppositely-disposed arms having pivots at their outer ends. The eye has a threaded perforation to receive a set-screw 43, which engages an annular groove 44 of the hub extension. The pivots 45 at the outer ends of the arms receive antifriction rollers or wheels 46 for engaging the rack-bars to retain the same in mesh with the gear-wheels. The pivots are also provided with disks or washers 47 for engaging the adjacent side faces of the rack-bars.

The transverse shaft is journaled in suitable bearings of brackets 48 by means of sleeves 49, having squared openings to receive the shaft and arranged in circular openings of the bearing-brackets. The sleeves 49 may be retained in the openings of the bearing-brackets by means of set-screws, annular grooves, or any other suitable means. When the transverse shaft is rotated, the rack-bars will be reciprocated and the upper and lower sashes will be simultaneously raised and lowered. Any suitable means may be provided for rotating the transverse shaft.

It will be seen that the window-operating device is exceedingly simple and inexpensive in construction, that it possesses great strength and durability, and that it is adapted to be readily applied to a window.

What is claimed is—

1. In a device of the class described the combination with a rack-bar, of a polygonal shaft, a gear-wheel having a polygonal opening to receive the shaft and provided with opposite hub extensions, one of the hub extensions being polygonal, and the other being cylindrical and having an annular groove, a washer mounted on the polygonal hub extension, and a guide arranged on the cylindrical hub extension and having means for engaging the said annular groove, said guide being also provided with an antifriction roller or wheel for engaging the rack to hold the same in mesh with the gear-wheel, substantially as described.

2. In a device of the class described the combination with a rack-bar, of a polygonal shaft, a gear-wheel having a polygonal opening to receive the shaft and provided with a cylindrical hub extension having an annular groove, a guide having an eye to receive the hub extension and provided with an antifriction device for engaging the rack-bar to hold the same in mesh with the gear-wheel, and a fastening device mounted on the eye of the guide and engaging the eye of the groove of the hub extension, substantially as described.

3. In a device of the class described the combination of bearing-brackets, sleeves journaled in the bearing-brackets and provided with polygonal openings, a polygonal shaft fitted in the sleeves, gear-wheels having polygonal openings and mounted on the shaft and provided with hub extensions, guides journaled on the hub extensions and having projecting arms provided with antifriction devices, rack-bars meshing with the gears and interposed between the same and the antifriction devices, substantially as described.

In testimony that we claim the foregoing as our own we have hereto affixed our signatures in the presence of two witnesses.

HARRY WEAVER HORST.
CYRUS JEFFREY WEBER.

Witnesses:
C. A. SELTZER,
S. L. YETTER.