Aug. 29, 1967 J. P. CONNER ET AL 3,339,161

ELECTROMAGNETIC CONTACTOR

Original Filed May 25, 1964 6 Sheets-Sheet 1

Fig. 1.

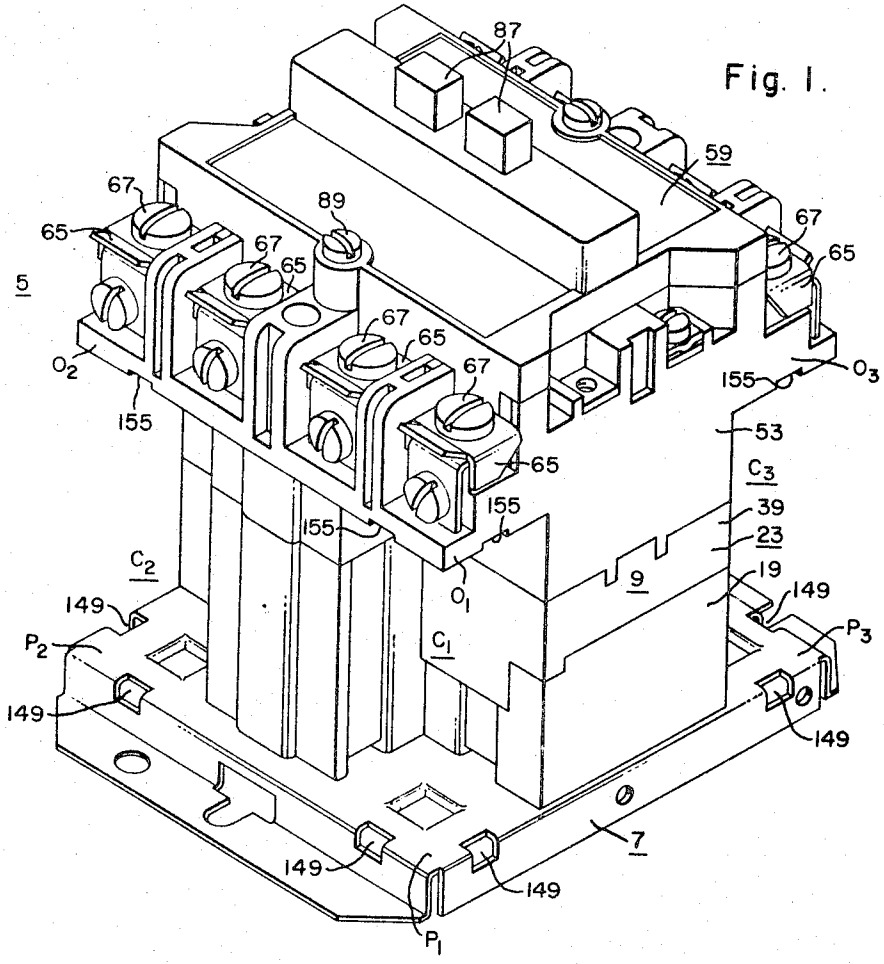

Fig. 3.

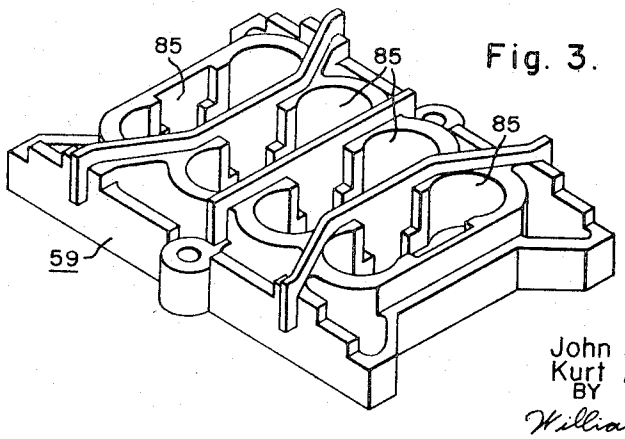

INVENTORS
John P. Conner and
Kurt A. Grunert
BY
William a Elchik
ATTORNEY

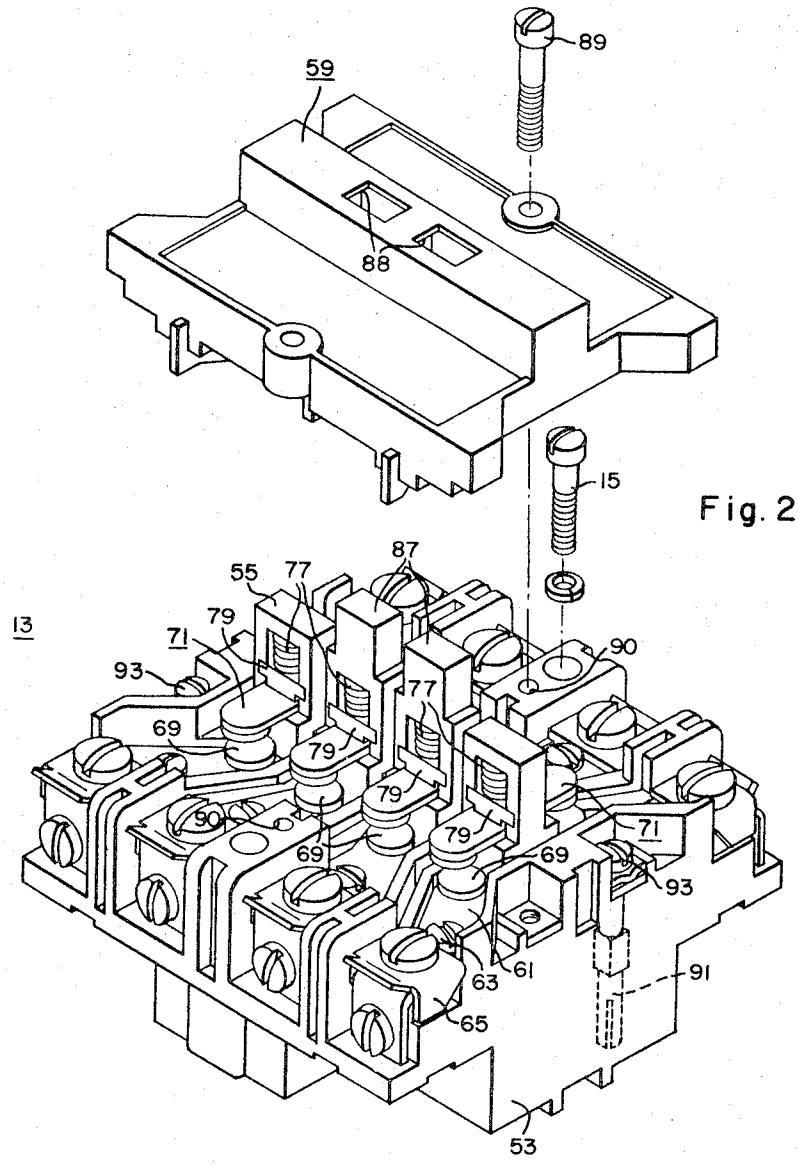

Fig. 2A.

ELECTROMAGNETIC CONTACTOR

Original Filed May 25, 1964 6 Sheets-Sheet 3

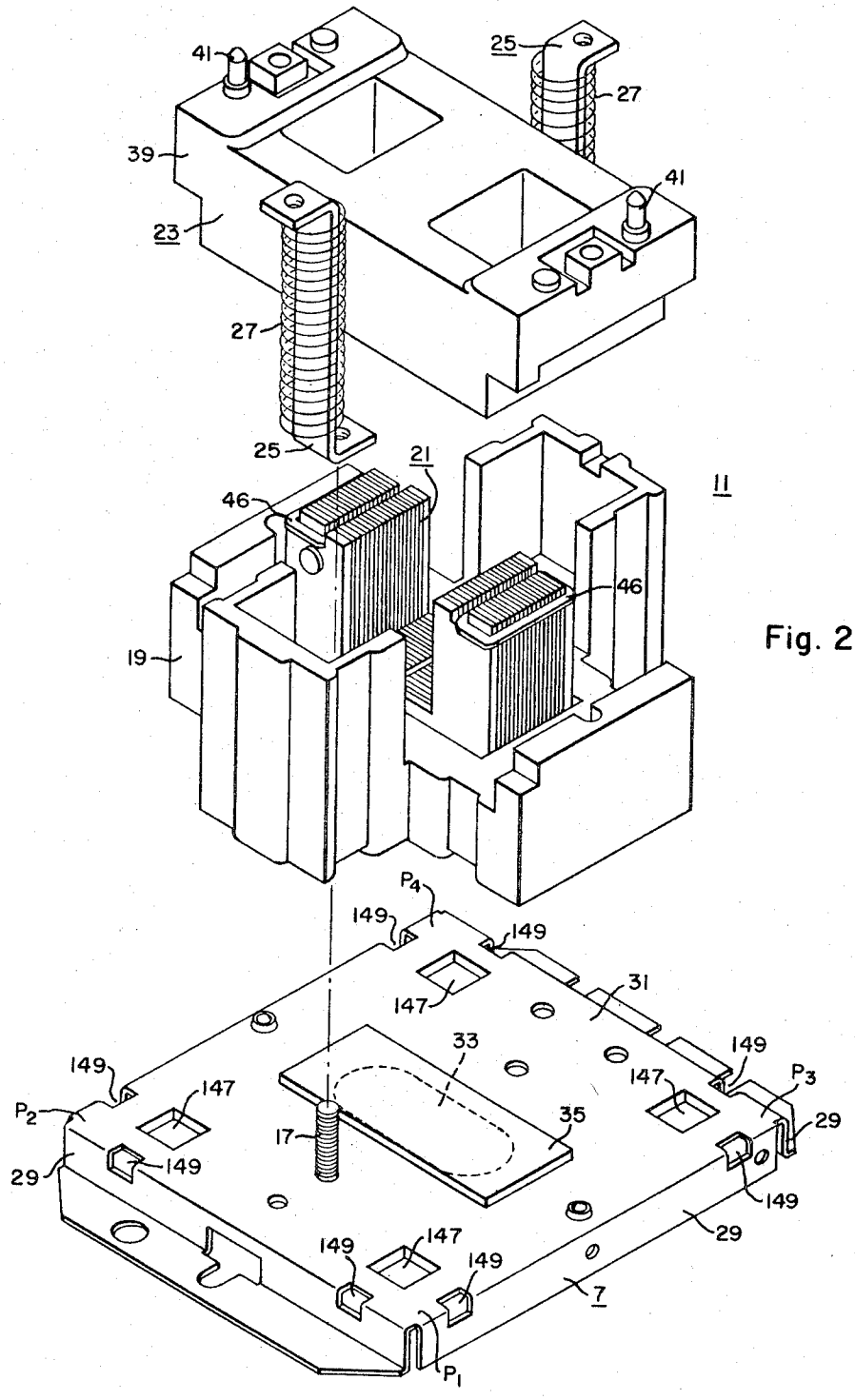

Fig. 2B.

ELECTROMAGNETIC CONTACTOR

Original Filed May 25, 1964 6 Sheets-Sheet 4

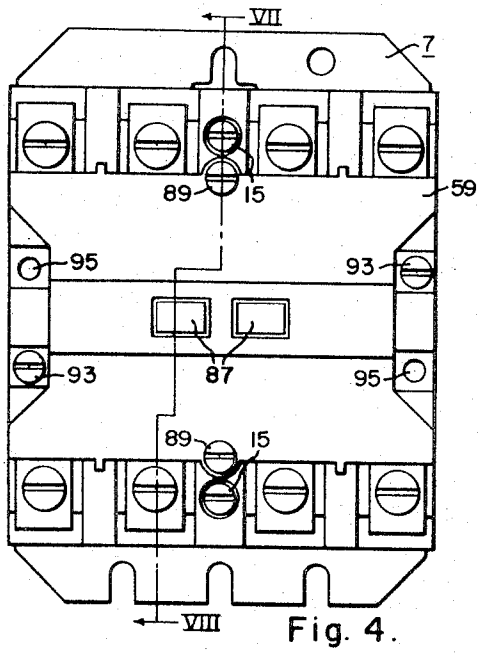

Fig. 4.

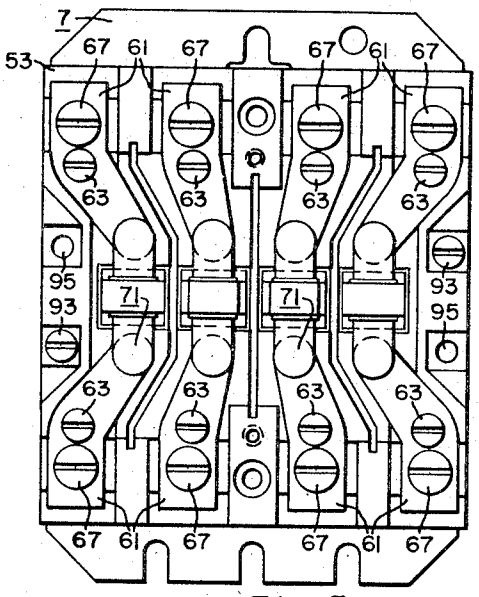

Fig. 5.

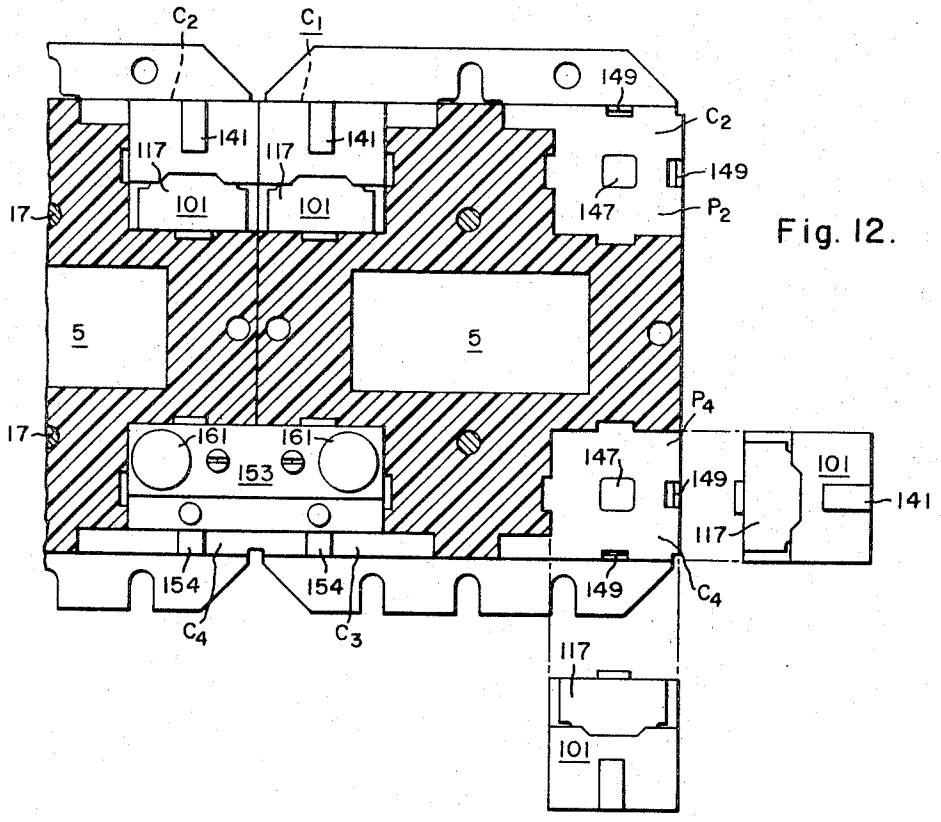

Fig. 12.

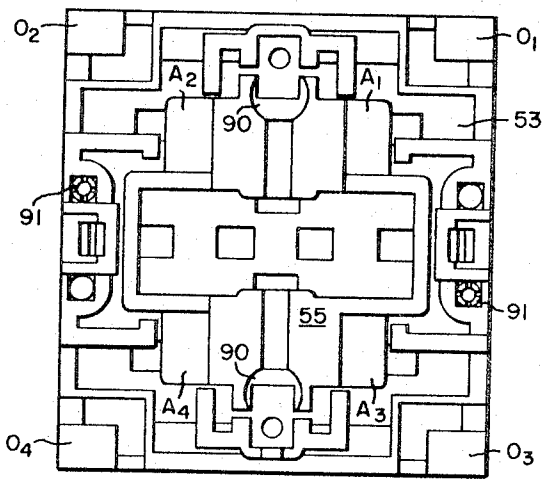

Fig. 6.

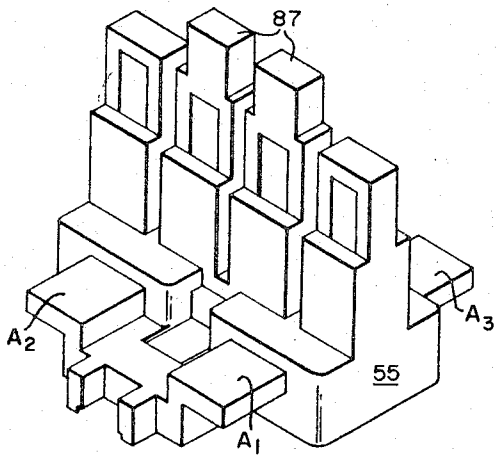

Fig. 14.

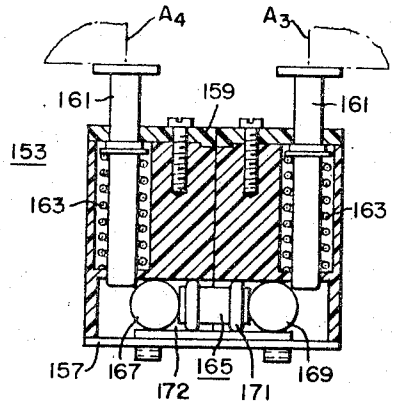

Fig. 13.

Fig. 7.

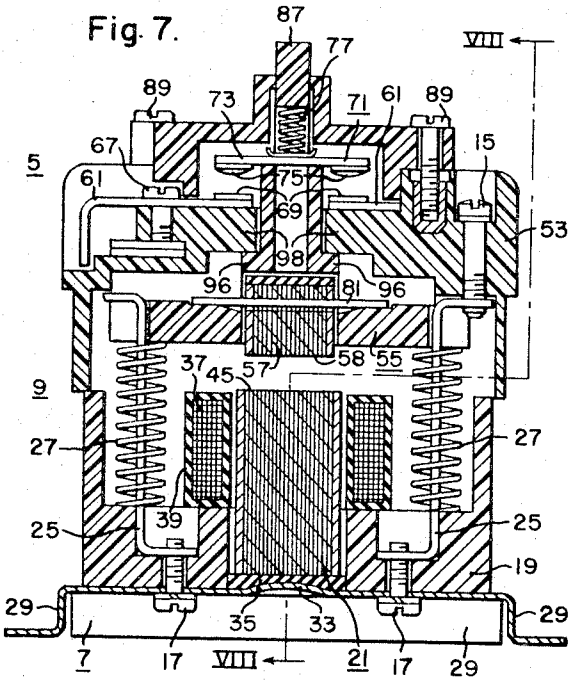

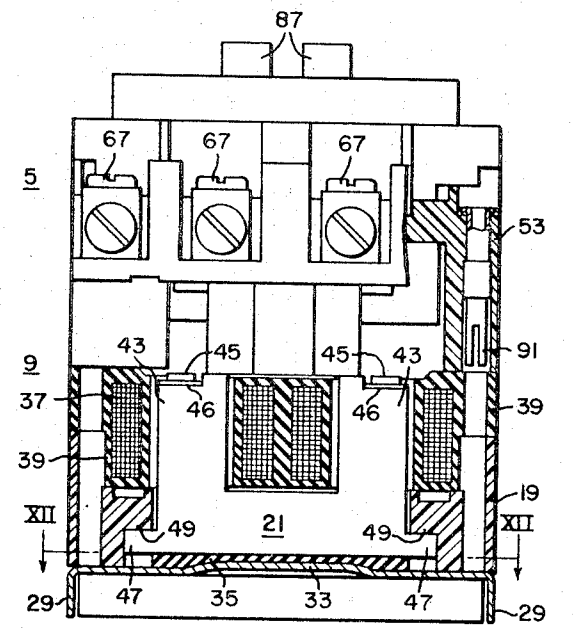

Fig. 8.

Fig. 9

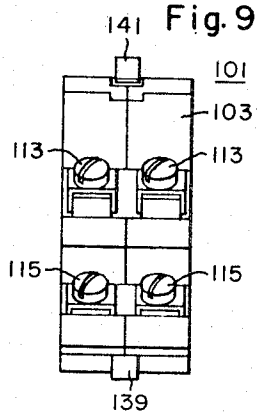

Fig. 10.

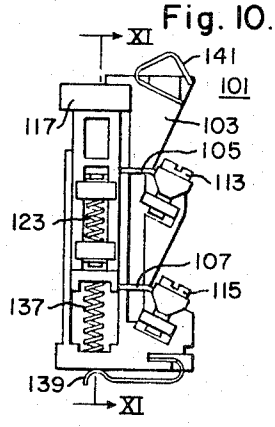

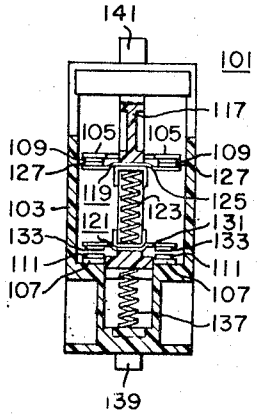

Fig. 11.

United States Patent Office 3,339,161
Patented Aug. 29, 1967

3,339,161

ELECTROMAGNETIC CONTACTOR

John P. Conner and Kurt A. Grunert, Beaver, Pa., assignors to Westinghouse Electric Corporation, Pittsburgh, Pa., a corporation of Pennsylvania

Original application May 25, 1964, Ser. No. 369,715. Divided and this application Aug. 10, 1966, Ser. No. 571,582

9 Claims. (Cl. 335—131)

ABSTRACT OF THE DISCLOSURE

A contactor comprises a plurality of conducting paths with each conducting path comprising a pair of terminals, a pair of spaced stationary contacts and a bridging contact member bridging the spaced stationary contacts. The terminals comprise two generally parallel rows with the rows extending widthwise across the contactor. The plurality of conducting paths converge from the two generally parallel rows of terminals to the plurality of bridging contact members to provide a widthwise dimension across the conducting paths at the bridging contact members that is less than the widthwise dimension across the conducting paths at each of the two rows of terminals. The contactor also comprises improved means for supporting the various parts thereof on a base plate.

This is a division of our patent application Ser. No. 369,715, filed May 25, 1964, now Patent No. 3,296,567.

This invention relates generally to electric control devices and more particularly to electric control devices such, for example, as contactors or relays that are operated by means or electromagnetic operating means.

In order to provide the industrial market with less expensive installations that take up less plant space without sacrificing power ratings, effeciency or utility, engineers in the electrical control art often devote a considerable amount of time and effort developing compactly constructed control devices. These compact control devices are not only less expensive to manufacture; but they also save space in panelboards. Thus, panelboard and control panel builders can manufacture and assemble smaller and less expensive installations for the industrial market.

Accordingly, an object of this invention is to provide an improved compactly constructed electric control device.

Another object of this invention is to provide an improved contactor having a plurality of conducting paths extending therethrough in such a manner that the available space in the contactor is utilized to the best advantage.

Another object of this invention is to provide an improved contactor having improved means for supporting the core member of the contactor electromagnet in place.

A further object of this invention is to provide an improved contactor with improved core-aligning and shock-absorbing mounting means mounting the core member of the electromagnet in position.

A more general object of this invention is to provide an improved electric control device that is relatively easy to assemble and inexpensive to manufacture.

The invention, both as to construction and operation, together with additional objects and advantages thereof, will be best understood from the following detailed description when read in conjunction with the accompanying drawings, in which:

FIGURE 1 is a isometric view of an electric control device constructed in accordance with principles of this invention;

FIG. 2A is an exploded isometric view of the front part of the control device seen in FIG. 1;

FIG. 2B is an exploded isometric view of the back part of the control device seen in FIG. 1;

FIG. 3 is an isometric view of the arc-hood device seen in FIGS. 1 and 2A, with the device being turned over from the position in which it appears in FIGS. 1 and 2A;

FIG. 4 is a top plan view of the control device seen in FIG. 1;

FIG. 5 is a plan view with the arc-hood removed, of the control device of FIG. 4;

FIG. 6 is a bottom plan view of the front part (the part seen in FIG. 2A) of the control device of FIG. 1;

FIG. 7 is a sectional view taken generally along the line VII—VII of FIG. 4;

FIG. 8 is a sectional view taken generally along the line VIII—VIII of FIG. 7;

FIG. 9 is a side elevational view of an auxiliary contact device;

FIG. 10 is a left side elevational view of the auxiliary contact device seen in FIG. 9;

FIG. 11 is a sectional view taken generally along the line XI—XI of FIG. 10;

FIG. 12 is a sectional view taken generally along the line XII—XII of FIG. 8 of two identical control devices, of the type herein described, mounted in a substantially abutting side-by-side relationship with four auxiliary contact devices and a mechanical interlock are shown in plan view in this figure;

FIG. 13 is a side sectional view of the mechanical interlock seen in FIG. 12; and

FIG. 14 is an isometric view of the insulating contact carrier seen in FIGS. 2A and 7.

Referring to the drawings, there is shown in FIG. 1, an electric control device or contactor **5** comprising a metallic base plate **7** and a contactor structure **9**. The contactor structure **9** comprises a back part **11** (FIG. 2B) and a front part **13** (FIG. 2A) which parts are connected together by means of two screws **15** (only one screw being shown in FIG. 2A). The contactor structure **9** is secured to the base plate **7** by means of two screws **17** (only one screw **17** being shown in FIG. 2B) which connect the back part **11** to the base plate **7** in a manner to be hereinafter specifically described.

As can be seen in FIG. 2B, the back part **11** of the contactor structure **9** comprises a back insulating housing part **19**, a generally U-shaped magnetic core member **21**, a coil structure **23**, two generally Z-shaped supports **25** and two spring members **27** disposed over the supports **25**.

As is best seen in FIGS. 2B, 7 and 8, the mounting plate **7** comprises a sheet metal plate member bent over at the four sides thereof to form four leg portions **29** that support the generally rectangular upper supporting plate part **31**. The upper plate part **31** comprises a generally planar supporting surface having a hump **33** formed therein, which, as can be seen in FIGS. 7 and 8, is a generally convex surface that serves to support the core member **21** in a manner to be hereinafter specifically described. A shock-absorbing resilient elastomeric or rubber member **35** is disposed on the plate **7** over the hump **33**. A member **35** comprising a neoprene rubber member has been successfully tested in a control device of the type herein described.

The coil structure **23** comprises a conducting coil **37** (FIGS. 7 and 8) encapsulated in an insulating shell **39**. Two stab-type terminal conductors **41** (FIG. 2B) extend from the insulating shell **39** to enable connection of the coil **37** in an electric circuit. As can be seen in FIGS. 2B, 7 and 8, the coil structure **23** has two openings therein which receive the two legs of the generally U-shaped magnetic core member **21**. The magnetic core member **21** comprises a plurality of laminations forming two leg

parts 43 (FIG. 8) that extend upward to provide two pole faces 45 having shading coils 46 supported therein. The core member 21 also comprises two extensions 47 (FIG. 8). During assembly of the contactor 5, the shock absorbing pad 35 (FIG. 2B) is first placed on the supporting part 31 of the plate 7 just over the hump 33. The magnetic core member 21 is then set down on top of the pad 35. Thereafter, the insulating housing part 19 is placed down over the core 21 with the core protruding through an opening in the housing part 19 and with two ledges 49 (FIG. 8) being disposed just over the extensions 47 of the core 21. The Z-shaped supports 27 are then placed in position and the screws 17 are passed up from the bottom of the plate 7 through suitable openings in the insulating housing part 19 and threaded into tapped openings in the lower legs of the supports 25 in the manner disclosed in FIG. 7. Thus, the screws 17 draw the supports 25 and insulating housing part 19 toward the plate 7. This movement, because of the engagement of the ledges 49 (FIG. 8) of the housing part 19 with the extensions 47 of the core member 21, pulls the magnetic core member 21 against the resilient pad 35 to thereby mount the core 21 on the hump portion 33 of the plate 7.

Referring to FIGS. 1, 2A, 7 and 8, the top or front part 13 of the contactor structure 9 comprises an upper housing part 53 of molded insulating material, a molded insulating contact carrier 55, a generally U-shaped magnetic armature 57 and an insulating arc-hood device 59. The generally U-shaped armature 57 has a separate pole face 58 (FIG. 7) at the outer end of each of the two leg portions thereof. As is best seen in FIGS. 2A and 5, four pairs of conducting straps 61 are secured to the insulating housing top part 53 by means of screws 63. A separate terminal plate 65 (FIGS. 1 and 2A; not shown in FIGS. 4, 5 and 7 for the purpose of clarity) is connected to the outer end of each of the conducting straps 65 by means of a terminal screw 67. A stationary contact 69 (FIGS. 2A and 7) is brazed or otherwise suitably secured to the inner end of each of the conducting straps 61. A separate bridging contact member 71 is provided to bridge each pair of separated stationary contacts 69. As can be seen in FIG. 7, each of the bridging contact members 71 comprises a conductor 73 and two stationary contacts 75 secured to opposite ends of the conductor 73. As is best seen in FIG. 2A, the insulating contact carrier 55 has four window openings therein. Each of the bridging contact members 71 is supported on the contact carrier 55 in a separate one of the window openings. In each of the openings a separate compression spring 77 biases a spring support 79 against the associated bridging contact member 71 to retain the member 71 in place and to provide for resilient contact engagement. As can be seen in FIG. 7, the insulating contact carrier 55 has an opening therein and a generally U-shaped laminated magnetic armature 57 is supported in the opening on the contact carrier 55 by means of a supporting pin 81 that passes through a suitable opening in the bight portion of the U-shaped armature 57 and is supported on ledges on a surface of the insulating contact carrier 55. A generally resilient shock absorbing pad 82 is mounted between the armature 57 and contact carrier 55. During assembly of the upper or front part 13 of the contact structure 9, the insulating contact carrier 55 and the magnetic armature 57 are moved up through an opening from the bottom of the insulating housing part 53 and, thereafter, the bridging contact members 71 are mounted in position in the window openings of the contact carrier 55 to thereby secure the insulating contact carrier 55 and armature 57 along with the bridging contact members 71 in position on the upper housing part 53. As can be seen in FIG. 3, the arc-hood device is a molded insulating member having four arc chambers 85 formed therein to extinguish the arcs drawn between the separating contacts of the four poles of the contactor 5. The insulating contact carrier 55 is provided with two upper extensions 87 that protrude through two openings 89 (FIG. 2A) in the arc-hood device 59 to provide alignment of the contact carrier 55. The arc-hood device 59 is secured to the upper part 53 of the insulating housing by means of two screws 89 (FIGS. 1 and 2A) that are screwed into tapped openings 91 (FIG. 2A) in the upper housing part 53. The front or upper part 13 (FIG. 2A) is secured to the back or lower part 11 (FIG. 2B) of the contactor structure 9 by means of two screws 15, only one of which is shown in FIGS. 2A and 7. Each of the two screws 15 is threaded into an upper tapped opening in a different one of the two supports 25. The two screws 15 connect the top part (FIG. 2A) with the bottom part 11 (FIG. 2B) of the contactor structure 9. The two springs 27 engage the contact carrier 55 at 90 (FIG. 6) to bias the contact carrier 55, armature 57, and bridging contact members 71 to the upper unattracted position seen in FIG. 7. Tubular conducting socket members 91 (FIGS. 2A, 6 and 8) are suitably supported at opposite sides of the insulating housing part 53 to cooperate with the two stab members 41 (FIG. 2B). A separate terminal screw 93 (FIG. 2A) is connected to each of the tubular socket members 91 to enable connection of the tubular sockets 91 in an electric circuit. When the top part 13 (FIG. 2A) is connected to the bottom part 11 (FIG. 2B), the two conducting stabs 41 that are electrically connected to the energizing coil 37 (FIG. 7) are forced into the openings of the tubular conducting sockets 91 to connect the terminals 93 to the coil 37 whereby when conductors (not shown) are connected to the terminals 93 the coil 37 will be connected in the electric circuit of the conductor.

As can be seen in FIG. 5, the contactor that is herein disclosed is a four-pole contactor with four separate controlled conducting paths extending lengthwise through the contactor. The contactor is herein described as having a length and width; but is to be clearly understood that the word length is not necssarily limited to a dimension that is longer or as long as the width of the contactor. As can be seen in FIG. 5, the conductors 61 are shaped to provide that the plurality of conducting paths converge from each of the two opposite ends thereof toward the center to thereby provide additional space at each of the two opposite sides of the plurality of conducting paths for the terminals 93. Additional openings 95 are provided in the housing part 53 to receive additional conducting sockets 91 and terminal screws 93 when a dual voltage coil is utilized in the contactor. As is seen in FIGS. 1 and 2A, each of the four conducting paths is separated and electrically insulated from the adjacent paths by means of insulating barriers that are molded integral with the housing part 53.

With the provision of the conducting paths converging from the terminals toward the bridging contact members, the terminals can be separated to provide adequate electrical clearance between adjacent terminals and adjacent wires that would be connected to the terminals, and the contactor is still provided with four conducting paths across the top thereof along with room at each of the two opposite sides of the four conducting paths for the coil terminals 91, 93.

Although the relay contactor that is herein described provides four normally open contact positions, it can be understood that the shape and form of these contacts can be changed in order to provide normally closed operation in a manner that is well known in the contactor art. It is also to be understood that the contactor can be constructed with more or less than four poles.

Referring to FIG. 7, the contactor 5 is shown therein with the contact carrier and armature biased to the upper unattracted position by means of the springs 27. When the contact carrier 55 is in this position, the four bridging contact members 71 are in the upper position separated from the stationary contacts 69 so that the four poles of the contactor are normally opened. Upon energization of the coil 37, the armature 57 is pulled, against

the bias of the springs **27**, into engagement with the generally U-shaped magnetic core member **21**. This movement is limited by engagement of the two pole faces **58** of the generally U-shaped armature **57** with the adjacent two pole faces **45** of the generally U-shaped core member **21**. During this movement, the springs **27** are compressed and charged an the four bridging contact members **71** are moved down into engagement with the contacts **69** whereby each of the bridging contact members **71** closes a circuit between the associated stationary contacts **69**. Each of the springs **77** is compressed slightly during the closing operation to provide contact pressure between the closed contacts. With the armature **57** is engagement with the magnet yoke **21**, and with the contact carrier **55** in the lower position charging the springs **27**, when the coil **37** is deenergized, the charged springs **27** will expand moving the insulating contact carrier **55** upward to the position seen in FIG. 7 to move the armature **57** and the four bridging contact members **71** upward to the unattracted position. This movement is limited by engagement of shoulder portions **96** (FIG. 7) on the insulating contact carrier with ledge portions **98** on the insulating housing part **53**. The contactor can then be again operated in the same manner by energization of the coil **37**.

During each closing operation of the contactor **5**, the shock absorbing pads **35** and **82** reduce the shock of the impact between the armature **57** and core **21**. The core **21**, being disposed over the hump **33** of the mounting plate **7**, can move universally to a limited extent in any direction to provide automatic alignment of the pole faces **45** of the core **21** with the pole faces **58** of the armature **57**. This cushioning dampens shocks from armature impacts not only in its own contactor assembly but also in adjacent units to thereby reduce contact bounce and wear between the contacts and also between the pole faces of the magnet yoke and armature. The self-aligning feature comprising the core mounting means saves wear on the parts and it also contributes to provide for a quieter operation of the contactor. Moreover, with the provision of a metallic mounting plate **7** comprising a raised supporting part **31** and four feet **29**, the raised supporting part **31** will flex slightly during each closing operation and some of the energy of the impact of the armature against the yoke will be absorbed due to internal strain energy in the mounting plate. Thus, the particular mounting arrangement of the magnet yoke **21** serves to aid in reducing: contact bounce and contact wear, magnet yoke-armature pole face wear, fatigue in the structural members, and the noise level of the operation of the contactor.

There is shown in FIGS. 9–11, three views of an electrical interlock or auxiliary contact device **101**. The auxiliary contact device **101** comprises an insulating housing **103** having two upper conductors **105** supported therein and two lower conductors **107** supported therein. A separate stationary contact **109** (FIG. 11) is welded or otherwise secured to each of the conductors **105** and a separate stationary contact **111** is welded or otherwise suitably secured to the conductors **107**. The conductors **105** extend out through openings at the side of the insulating housing **103** and a separate terminal screw **113** is supported at the outer end of each of these conductors to enable connection of the contacts **109** in an electric circuit. The conductors **107** extend out through the side of the insulating housing and a separate terminal screw **115** is provided at the outer end of each of these conductors to enable connection of the contacts **111** in an electric circuit. An insulating operating member and contact **117** is mounted for reciprocal rectilinear vertical movement in the insulating housing **103**. The member **117** is provided with a window opening therein and two bridging contact members **119** and **121** are supported in the opening by means of a spring **123**. The bridging contact member **119** comprises a conducting member **125** and two contacts **127** welded or otherwise secured to the opposite ends of the member **125**. The bridging contact member **121** comprises a conductor **131** and two contacts **133** welded or otherwise secured to the opposite ends of the member **131**. An operating spring **137** biases the member **117** and therefore the two bridging contact members **119** and **121** to the upper position shown in FIG. 11. A lower resilient spring steel clip member **139** is secured to the housing **103** and an upper resilient spring steel clip member **141** is secured to the upper part of the housing **103**. The auxiliary contact device **101** is operated by depression of the member **117** which movement charges the operating spring **137**. This downward (FIG. 11) movement of the member **117** moves the upper bridging contact member **119** from the normally closed to an open position. This movement of the member **117** also moves the lower bridging contact member **121** from the normally open to a closed position. Upon release of the depressed operating member **117**, the operating spring **137** will move the operating member **117** back up to the position seen in FIG. 11 wherein the upper bridging contact member **119** is in the upper normally closed position and the lower bridging contact member **121** is in the lower normally open position. It is to be understood that these contacts can also be mounted to provide two normally open sets or two normally closed sets of contacts in a manner well known in the art.

Referring to FIG. 1, it will be noted that the insulating housing part **19**, the insulating cover **39** of the coil structure **23** and the insulating housing part **53** mate and cooperate, along with the insulating arc-hood device **59** to form the insulating housing structure of the contactor structure **9**. The insulating parts **19**, **39** and **53** are formed to provide four cavities, one at each of the back four corners of the contactor structure. The cavities are identified as C_1, C_2, C_3 and C_4. The cavity C_4, which cannot be seen in FIG. 1, is seen in FIG. 12. Each of the four cavities is either identical or symmetrically identical to each of the three other of the four cavities. The insulating housing part **53** overhangs the four cavities C_1, C_2, C_3 and C_4 at the four corners O_1, O_2, O_3 and O_4 thereof (FIGS. 1 and 6) respectively. The four corners P_1, P_2, P_3 and P_4 (FIGS. 1, 2B and 12) of the mounting plate **7** serve as the four bases of the cavities C_1, C_2 C_3 and C_4 respectively. The mounting plate, at each of the four corners thereof, is formed with a depression **147** stamped therein, the two openings **149** that are provided one at each of the two opposite edges of each corner. Referring to FIG. 12, there is shown therein, in section, one of the control devices **5** and part of another of the control devices **5**, which devices are mounted in a substantially abutting side-by-side relationship. As can be seen in FIG. 12, the contactor **5** (on the right) is provided with an electric interlock **101** in the cavity C_1, an open cavity at C_2, one-half of a mechanical interlock indicated generally at **153** in the cavity C_3 and an open cavity C_4. Two auxiliary contact devices **101** are disposed outside of the cavity C_4 and dot-and-dash lines are drawn into the cavity C_4 in order to indicate that either of these electrical control devices could be mounted in the cavity C_4 by means of a rectilinear movement into the mounted position. Thus, it is to be noted that an electrical interlock can be mounted in any of the four cavities of the contactor in either of the two positions indicated at the cavity C_4 in FIG. 12. When one of the auxiliary contact devices **101** is moved into the mounted position in the associated cavity, the lower spring clip **139** (FIGS. 9–11) passes through the associated opening **149** and the clip is additionally spring charged when the end part thereof engages the lower depression **147** to provide increased frictional support. The upper spring **141** engages in an associated notch **155** (FIGS. 1 and 6) and is spring charged against the overhang in the notch **155** to provide spring pressure whereby the springs **139**, **141** of the auxiliary contact device maintain the contact device **101** in the mounted position in the cavity. Referring to FIG.

6, it will be noted that the insulating contact carrier **55** is provided with four corners A_1, A_2, A_3 and A_4 molded as integral parts of the contact carrier. Each of the corners A_1, A_2, A_3 and A_4 serves as an actuating part moving in the associated cavity rectilinearly in a vertical (FIGS. 7 and 8) direction with the insulating contact carrier to thereby engage and actuate the operating member **117** of an auxiliary contact device if the auxiliary contact device is disposed in the cavity. The auxiliary contact **101** will be actuated by the associated actuating part of the contact carrier **55** in either of the two possible mounted positions (see C_4 of FIG. 12). It will be noted that the operating member **117** of the auxiliary contact device is wide enough so that it will be disposed in the inside corner portion of the cavity just under the actuating part of the contact carrier regardless of the direction of mounting (see C_4 of FIG. 12) of the auxiliary contact device in the cavity. With the auxiliary contact device in position, the terminals **113** and **115** (FIG. 9) are accessible for connection of the associated contacts in an electric circuit. As can be seen in FIG. 12, when the auxiliary contact device **101** is mounted in the cavity (the auxiliary contact device being shown fully mounted in the cavity C_1) the contact device **101** does not extend past the length and width dimensions of the insulating housing parts **19**, **39**, **53** (FIG. 1) and, since the base plate **7** serves as the base of the cavity and because the insulating member **53** overhangs the associated cavity space, it can be understood that the auxiliary contact device is disposed such that it will not take up additional space in a panelboard or control center. The auxiliary contact device **101** is readily removably mounted in position by merely being moved into the mounted position with the spring clips **139**, **141** serving to retain the auxiliary contact device in position. If desired, additional attaching means such as screws could be used to secure the auxiliary contact device in position. It is to be noted that the operating member **117** of the auxiliary contact device is automatically operatively connected to the contact carrier of the contactor merely by means of the mounting operation.

For certain applications, it is desirable to prevent simultaneous operation of two control devices that may be mounted in a side-by-side relationship. The mechanical interlock **153** (FIG. 13) is provided for this purpose. As can be seen in FIG. 13, the interlock **153** comprises a base member **157**, an insulating housing structure **159**, two operating members **161** supported for rectilinear vertical movement in the housing structure **159**, two compression springs **163** supported to bias the operating members **161** to the upper position shown, and a blocking structure indicated generally at **165**. The blocking structure **165** comprises two ball bearings **167** and **169** separated by means of a spacer **171**. The blocking structure **165** reciprocates horizontally (FIG. 3) in a track **172**. The blocking structure **165** interlocks the operating members **161** so that they cannot be simultaneously depressed. If one of the members **161** is depressed, the blocking structure **165** will be moved horizontally in the track **173** to engage the lower end of the other member **161** to prevent depression of the other member. The spacing contact members to provide a widthwise dimension across of the blocking structure **165** is such that both of the members **161** if they are moved simultaneously will be blocked from movement by engagement thereof with the ball bearings **167** and **169**. Thus, the interlock **153** provides that the operating member **161** cannot be moved to the lower operating positions at the same time. The details and operation of the interlock **153** are more specifically described in the copending application of John P. Conner et al., Ser. No. 369,716, filed May 25, 1964, and assigned to the assignee of the instant application.

Referring to FIG. 12, it will be noted that when the two control devices **5** are mounted in a substantially abutting side-by-side relationship, the adjacent cavities C_3 and C_4 of the two devices provide a common pocket into which the mechanical interlock **153** can be disposed. The interlock **153** may be removably secured in the mounted position by means of spring clips **154** (similar to the clips **139** of FIGS. 9–11). As can be seen in FIG. 12, the mechanical interlock **153** is disposed within the confines of the associated pocket that comprises the adjacent cavities C_3, C_4 so that the interlock does not take up additional panelboard space. It is to be understood that a mechanical interlock **153** could also be similarly mounted in the upper adjacent cavities C_1, C_2. It is noted in FIG. 12, that the two operating members **161** are disposed at the inside corners of the associated cavities C_3, C_4 so that each of the members **161** would be disposed under the associated actuating part A_3 or A_4 of the insulating contact carrier. Thus, with the members **161** disposed under the contact carriers of the adjacent contactors, the blocking structure **165** (FIG. 13) will operate to interlock the contact carriers, in the same manner hereinbefore described, to prevent the contactors from being operated to the actuating position at the same time. It is also to be noted that the operating members **161** are automatically operatively connected to the insulating contact carriers of the adjacent contactors merely by means of the mounting operation of the mechanical interlock.

From the foregoing, it will be understood that there is provided by this invention an improved compactly constructed electric control device. The invention comprises an improved construction of conducting paths through the contactor with adequate insulation between adjacent terminals and with the conducting paths converging toward the center to provide space at each of two opposite sides of the plurality of conducting paths for terminal means to enable front external connection of the contactor coil in an electric circuit.

The invention also comprises improved means for mounting the core member in the assembly. The core member is mounted to provide for self-alignment between the pole faces of the core member and the armature, and also to provide for absorption of the force of impact between the core member and armature during operation of the contactor. This mounting provision provides quieter, smoother operation that is less destructive to the contactor parts.

Since numerous changes may be made in the above-described construction and different embodiments of the invention may be made without departing from the spirit and scope thereof, it is intended that all matter contained in the foregoing description or shown in the accompanying drawings shall be interpreted as illustrative and not in a limiting sense.

We claim as our invention:

1. A contactor comprising an insulating housing and having a length, a width, and a height, conducting means forming a plurality of conducting paths extending lengthwise through said contactor, each of said conducting paths comprising a pair of terminals, one terminal at each of two opposite ends of the conducting path, each of said conducting paths comprising two spaced stationary contacts between the associated pair of terminals and a bridging contact member for bridging the spaced stationary contacts, said terminals comprising two generally parallel rows of terminals supported with said rows extending widthwise across said contactor, and said plurality of conducting paths converging from said two generally parallel rows of terminals to said plurality of bridging contact members to provide a widthwise dimension across said conducting paths at said bridging contact members that is less than the widthwise dimension across said conducting paths at each of said rows of terminals.

2. A contactor according to claim **1**, said contactor comprising an electromagnet supported generally within said insulating housing, said electromagnet comprising a coil member, upon energization of said coil member said

electromagnet operating to operate said plurality of bridging contact members from one to another operating position, a coil terminal at each of two widthwise sides of said plurality of bridging contact members, said two coil terminals being provided to enable connection of said coil member in an electric circuit, and the total widthwise dimension of said two coil terminals and said plurality of bridging contact members being not substantially greater than the widthwise dimension of each of said rows of terminals.

3. A contactor according to claim 2, said insulating housing comprising an insulating arc-hood structure removably mounted at the top of said insulating housing and covering said plurality of bridging contact members, said coil terminals being positioned at the top of said insulating housing on opposite sides of said insulating arc-hood structure and being accessible for operation by means of a screw-driver type tool from the top of said contactor when said arc-hood structure is in the mounted position.

4. A contactor comprising a base plate, an insulating housing comprising a back insulating housing part having an opening therein and ledge means in proximity to said opening, a magnetic core member comprising a pole piece and a support part, spring support means, securing means between said base plate and said spring support means drawing said spring support means toward said base plate capturing said back insulating housing part between said spring support means and said base plate with said pole piece extending through said opening and with said support part captured between said ledge means and said base plate whereby said securing means secures said spring support means said back insulating housing part said core member and said base plate together as a unit, said contactor comprising a movable structure comprising a magnetic armature and an insulating contact carrier, and spring means on said spring support means biasing said movable structure away from said magnetic core member to an unattracted position.

5. A contactor according to claim 4, said base plate having a generally planar supporting surface and a hump therein at said generally planar supporting surface, a shock absorbing member, said core member being captured in place on said hump with said shock absorbing member being sandwiched between said core member and said hump whereby said core member is mounted on said base plate for limited generally universal movement.

6. A contactor according to claim 4, said core member comprising a member having a support part at each of two opposite sides thereof in proximity to the back thereof and leg portions extending upwardly from the back thereof to provide pole faces, said back insulating housing part being secured to said base plate with said core member disposed such that the two support parts thereof are under said ledge means of said back insulating housing part whereby said core member is captured between said back insulating housing part and said base plate, and a shock absorbing member sandwiched between the back of said core member and said base plate.

7. A contactor according to claim 4, said insulating housing comprising a front insulating housing part, and securing means between said front insulating housing part and said spring support means securing said front insulating housing part to said back insulating housing part.

8. A contactor according to claim 4, said spring support means comprising a pair of elongated spring support members, said securing means being secured between said base plate and the back ends of said spring support members, said spring means comprising a separate spring member on each of said spring support members, said insulating housing comprising a front insulating housing part, and another securing means secured between said front insulating housing part and the front ends of said spring support members drawing said front insulating housing part against said back insulating housing part to secure said front insulating housing part on said back insulating housing part.

9. A contactor according to claim 8, said base plate having a generally planar supporting surface and a hump therein at said generally planar supporting surface, a shock absorbing member, and said core member being secured in place on said hump with said shock absorbing member being sandwiched between said core member and said hump whereby said core member is mounted on said base plate for limited generally universal movement.

References Cited

UNITED STATES PATENTS

2,897,316	7/1959	Brauneck	335—131
3,088,058	4/1963	Jakel	335—277

BERNARD A. GILHEANY, *Primary Examiner.*

R. N. ENVALL, JR., *Assistant Examiner.*