(12) INTERNATIONAL APPLICATION PUBLISHED UNDER THE PATENT COOPERATION TREATY (PCT)

(19) World Intellectual Property Organization
International Bureau

(43) International Publication Date
25 January 2001 (25.01.2001)

PCT

(10) International Publication Number
WO 01/05525 A1

(51) International Patent Classification[7]: B08B 9/02

(21) International Application Number: PCT/CA00/00837

(22) International Filing Date: 17 July 2000 (17.07.2000)

(25) Filing Language: English

(26) Publication Language: English

(30) Priority Data:
2,277,525 16 July 1999 (16.07.1999) CA

(71) Applicant and
(72) Inventor: YEHIA, Victor [CA/CA]; 4107 Burkehill Road, West Vancouver, British Columbia V7V 3L9 (CA).

(74) Agent: YANG, Mark, M.; Clark, Wilson, 800-885 West Georgia Street, Vancouver, British Columbia V6C 3H1 (CA).

(81) Designated States *(national)*: AE, AG, AL, AM, AT, AU, AZ, BA, BB, BG, BR, BY, BZ, CH, CN, CR, CU, CZ, DE, DK, DM, DZ, EE, ES, FI, GB, GD, GE, GH, GM, HR, HU, ID, IL, IN, IS, JP, KE, KG, KP, KR, KZ, LC, LK, LR, LS, LT, LU, LV, MA, MD, MG, MK, MN, MW, MX, MZ, NO, NZ, PL, PT, RO, RU, SD, SE, SG, SI, SK, SL, TJ, TM, TR, TT, TZ, UA, UG, US, UZ, VN, YU, ZA, ZW.

(84) Designated States *(regional)*: ARIPO patent (GH, GM, KE, LS, MW, MZ, SD, SL, SZ, TZ, UG, ZW), Eurasian patent (AM, AZ, BY, KG, KZ, MD, RU, TJ, TM), European patent (AT, BE, CH, CY, DE, DK, ES, FI, FR, GB, GR, IE, IT, LU, MC, NL, PT, SE), OAPI patent (BF, BJ, CF, CG, CI, CM, GA, GN, GW, ML, MR, NE, SN, TD, TG).

Published:
— *With international search report.*
— *Before the expiration of the time limit for amending the claims and to be republished in the event of receipt of amendments.*

For two-letter codes and other abbreviations, refer to the "Guidance Notes on Codes and Abbreviations" appearing at the beginning of each regular issue of the PCT Gazette.

(54) Title: PIPE END PREPARATION TOOL

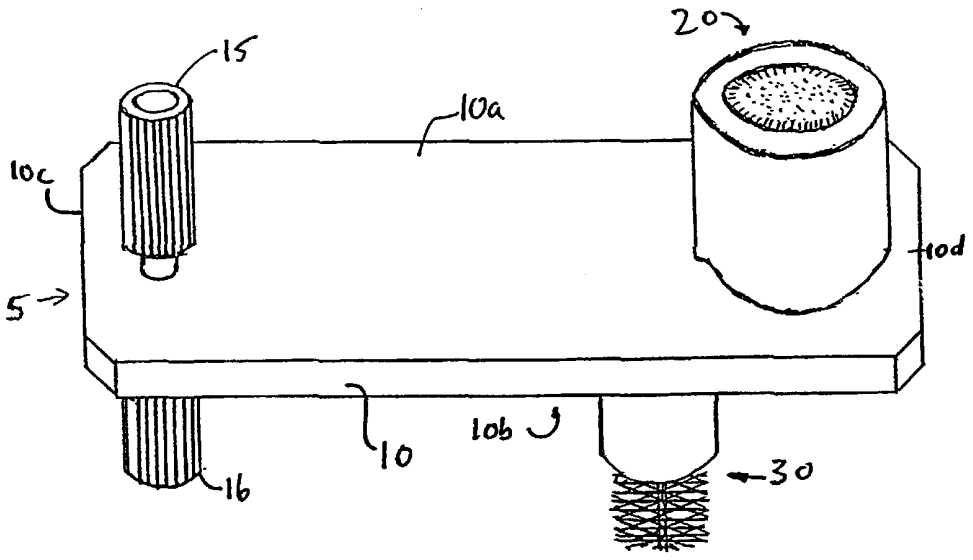

(57) Abstract: A hand tool (5) is provided wherein a pipe end engages a female (20) or male brush (30) at one end (10d) of the tool and the other end (10c) has a grippable member (15, 16) that allows a rotation bicycling motion to permit the easy cleaning of the pipe end. Variations include a hinge between such ends to allow cleaning the pipe end at an angle or a ratchet version.

WO 01/05525 A1

PIPE END PREPARATION TOOL

Field of Invention

This invention relates to tools for cleaning pipes for soldering.

Background of Invention

Previous attempts (such as US Patent #4,133,070; US Patent #5,566,416; US Patent #5,146,717; and Canadian Patent #1072709) to assist a workman clean pipes have suffered from certain defects (for example, requiring excessive twisting of the workman's wrist). The present invention addresses such defects.

Statement of Invention

There is provided a hand tool for cleaning the end of a pipe comprising: (a) a longitudinal member having first and second opposed end portions and first and second opposed longitudinal sides; (b) a first grippable member rotatably connected to said first end portion on said first longitudinal side; (c) first cleaning means connected to said second end portion on said second longitudinal side, for receiving the pipe end in a direction transverse to said longitudinal member and for cleaning a first surface of the pipe end.

Brief Description of Drawings

Advantages of the present invention will become apparent from the following detailed description taken in conjunction with preferred embodiments shown in the accompanying drawings, in which:

Fig. 1 is a front perspective view of the tool;

Fig. 2 is a perspective view of the tool of Fig. 1 rotated upside down;

Fig. 3 is the top plan view of the tool of Fig. 1;

Fig. 4 is the bottom plan view of the tool of Fig. 1;

Fig. 5 is a side view of the tool of Fig. 1;

Fig. 6 is a side view of another embodiment of the tool of Fig. 1;

Fig. 7 is a side view of another embodiment of the tool;

Fig. 8(a) is a partial sectional view of another embodiment of the female brush of the tool;

Fig. 8(b) is a partial sectional view of another embodiment of the male brush of the tool;

Fig. 8(c) is a top plan view of another embodiment of the male brush of the tool;

Fig. 9 is a partial side view of another embodiment of the tool;

Fig. 10 is a partial bottom plan view of another embodiment of the tool;

Fig. 11(a) is a partial sectional view of another embodiment of the female brush of the tool;

Fig. 11(b) is a partial sectional view of another embodiment of the male brush of the tool;

Fig. 12 is a partial side view of another embodiment

Fig. 13 is a top plan view of another embodiment of the male brush of the tool.

Detailed Description of the Preferred Embodiments

Herein, the term "pipe end" includes not only the end of a metallic pipe but also the end of a pipe connector (which is typically much shorter than the pipes it connects to).

Hand tool 5 has rigid member 10 which has two opposed sides 10a and 10b, and opposed end portions 10c and 10d. Side 10a at end portion 10c has rotatably attached member 15 to be gripped by the fingers of one hand. On the opposed side 10b, at

end portion 10d, male hard brush 30 is rigidly and undetachably disposed for receiving pipe end 1. One hand holds tool 5. Pipe end 1 is inserted over male brush 30 so that it abuts pedestal 31 (explained in detail below in conjunction with Fig. 5) and is disposed in a snug friction fit therewith and is held by the other hand. The inner surface of pipe end 1 is cleaned by a pedalling motion. One pedalling motion is achieved by gripping rotatable member 15 and holding end portion 10c stationary with one hand while rotating, with the other hand, pipe end 1 fitted over male brush 30, about end portion 10c. Another pedalling motion is achieved by gripping rotatable member 15 and moving end portion 10c with one hand, and gripping pipe end 1 fitted over male brush 30, with the other hand, and moving end portion 10c and pipe end 1 about each other. Either way, the effect of the pedalling motion is that male brush 30 will rotationally scrape and clean the inner surface of pipe end 1.

Similarly, on side 10b and at end portion 10c, rotatable member 16 is gripped by the fingers of one hand; and on the opposed side 10b and end portion 10d, there is rigidly and undetachably disposed female brush 20.

Brushes 20 and 30 are rigidly and undetachably attached to member 10 by conventional means such as bolts, soldering and the like (not shown). Alternatively, brushes 20 and 30 may be detachably attached to member 10 by conventional threaded mounting (brush 20 would be threaded to engage a corresponding threaded socket in member 10, not shown).

Female brush 20 is shown in more detail in Fig. 5. There is a circular wall 21 containing a cylindrical set of hard brush wires 22. There is an upper annular lip 24 to guide pipe end 1 into female brush 20. Brush wires 22 are directed in the same tangential direction and collectively define an internal diameter that is slightly less

than the outer diameter of pipe end 1. Lip 24 has an internal diameter which is slightly more than the outer diameter of pipe end 1. Accordingly, a firm friction fit is created when pipe end 1 is placed within female brush 20. Within female brush 20 is a central, frusto-conical guide projection 23, to facilitate the entrance and placement of pipe end 1 within female brush 20.

Male brush 30 and female brush 30 are disposed on the opposed sides of member 10. The outer diameter of male brush 30 is slightly larger than then inner diameter of pipe end 1. Male brush 30 has a pedestal 31 on which hard brush wires 32 are disposed. Abutting pedestal 31, the terminal of pipe end 1 is disposed a small distance from member 10. Pedestal 31 has a circular lip 33 to guide the manual placement of pipe end 1 onto pedestal 31. Brush wires 32 collectively have an outer diameter which is slightly larger than the internal diameter of pipe end 1.

Explained and shown in Figs. 1-5 is the version wherein hand tool 5 has one female brush and one male brush. In the simplest form of the invention (not shown), there is only one grippable member and one cleaning member (e.g. grippable member 15 is mounted at end portion 10c on surface 10a, and brush 20 or brush 30 mounted at end portion 10d on surface 10b).

In the above illustrated explanation, female brush 20 and male brush 30 are offset from each other in a direction transverse to member 10. One advantage of this configuration is that the thumb or other part of one hand can be placed on surface 10a proximate female brush 20 and opposite of brush 30 to provide stability as pipe end 1 is loaded onto brush 30. In another embodiment of tool 5 (shown in plan view in Fig. 6), female brush 20 and male brush 30 are aligned in a direction transverse to member 10.

It will be appreciated that different combinations of brushes 20 and/or 30 are possible. For example, instead of the illustrated female brush 20 and opposed male brush 30, end portion 10d may have two opposed female brushes 20 (not shown) or two opposed male brushes 30 (not shown). This permits two differently sized male brushes or two differently sized female brushes to be usefully available in certain applications.

Another embodiment of tool 5 is shown in Fig. 7, wherein end portion 10c is angularly movable with respect to end portion 10d by operation of intermediate hinge 50. This allows for a wider application of tool 5. For example, tool 5 of Fig. 7 permits the cleaning of pipe end 1 which is fixed in a crowded environment; e.g. an environment that does not permit complete rotation of end portion 10c about end portion 10d (whose male brush 30 is placed in pipe end 1) as contemplated by the versions shown in Figs. 1-6.

Another embodiment of tool 5 is shown in Figs. 8-11, wherein brushes 20 and 30 are detachable from member 10. In Figs. 8-11, reference numerals which are identical to those of Figs. 1-6 represent similar or identical elements, except where the context otherwise indicates. The main difference between brushes 20 and 30 of Figs. 1-6 and brushes 20 and 30 of Figs. 8-11 is their attachment to member 10. In Figs. 8-11, brushes 20 and 30 are detachably connectable to each other and to member 10 with a snap lock mechanism. Female brush 20 has stem 60 with annular lip 61. Male brush 30 has annular stem 70, which has annular lip 71 having a profile that is complementary to lip 61 to create a conventional snap lock and unlock mechanism. As shown in Fig. 9, member 10 has a through hole 80 profiled to receive snugly stems 60 and 70 when attached as described above. When attached, the result (in side

view) appears as shown in Fig. 6. Differently sized brushes of this detachable embodiment, may be employed to fit differently sized pipe ends 1. Optionally (as seen in Fig. 8(b) and 8(c) and in conjunction with Fig. 10, explained below), male brush 30 may have gear 110.

Another embodiment of tool 5 is shown in Fig. 10 to facilitate rotational movement of tool 5 about pipe end 1 which is fixed in a crowded environment (e.g. as contemplated by the embodiment shown in Fig. 7). As seen in Fig. 8(c), gear 110 is disposed on the outer surface of stem 70 and when brushes 20 and 30 are attached, as explained above, the teeth of gear 110 of male brush 30 are exposed above surface 10b. Steel clip 100 is disposed on surface 10b to engage gear 110 in a conventional ratchet-type mechanism. A variation is where female brush 20 has gear 110 (not shown).

In another embodiment of tool 5, female brush 20 has stem 65 with annular channel 66, and gear 67 (as shown in Fig. 11(a)) and male brush 30 has stem 75 with annular channel 76, and gear 77. As shown in Fig. 12, member 10 has blind hole 120 profiled to snugly receive stem 65 in a friction fit. Proximate to hole 120, there is embedded within surface 10a, an associated clip 100 to create a ratchet type mechanism (as explained for Fig. 11). Also shown in Fig. 12, member 10 has blind hole 121 profiled to snugly receive in a friction fit stem 75. Proximate to blind hole 121, there is embedded within surface 10b, an associated clip 100 to create a ratchet type mechanism. To lock stems 65 or 75 in place, member 10 has on its side, two blind holes profiled to receive U-shaped key 80 in a friction fit, to engage annular channel 66 or 76, as the case may be, and to prevent the escape of stems 65 or 75 from their respective blind holes 120 or 121, as shown in FIg. 13.

Tool 5 is made of rigid material (typically metal or plastic). Brushes 20 and 30 are conventionally made and attached to tool 5 as described above. Hinge 50 is conventional.

For a 1/2" pipe end, the following may be acceptable dimensions for tool 5. Female brush is about 1" high, and the diametrical separation from opposed brush wires (i.e. internal diameter defined) is about 1/2", and the internal diameter of lip 24 is slighter larger than that. Female brush is about 1" high. Male brush 30 is about 3/4" high and has diamater of out 5/8". Lip 33 is about 1/8" thick.

It will be appreciated that the dimensions given are merely for purposes of illustration and are not limiting in any way. The specific dimensions given may be varied in practising this invention, depending on the specific application.

While the principles of the invention have now been made clear in the illustrated embodiments, there will be immediately obvious to those skilled in the art, many modifications of structure, arrangements, proportions, the elements, materials and components used in the practice of the invention, and otherwise, which are particularly adapted for specific environments and operational requirements without departing from those principles. The claims are therefore intended to cover and embrace such modifications within the limits only of the true spirit and scope of the invention.

WHAT IS CLAIMED IS:

1. A hand tool for cleaning the end of a pipe comprising:

(a) a longitudinal member having first and second opposed end portions and first and second opposed longitudinal sides;

(b) a first grippable member rotatably connected to said first end portion on said first longitudinal side;

(c) first cleaning means connected to said second end portion on said second longitudinal side, for receiving the pipe end in a direction transverse to said longitudinal member and for cleaning a first surface of the pipe end.

2. The hand tool of claim 1, wherein said first cleaning means comprises a cylindrical female brush for snugly receiving the pipe end with a friction fit of the outer surface of the pipe end.

3. The hand tool of claim 2, further comprising guide means disposed centrally within said female brush for guiding the pipe end into and maintaining the pipe end in place relative to said female brush.

4. The hand tool of claim 3, wherein said guide means comprises a cylindrical projection with a slightly bevelled wall.

5. The hand tool of claim 2, wherein said female brush has a plurality of wires disposed in an annular configuration, and said wires are directed inwardly in the same direction away from the radial direction.

6. The hand tool of claim 1, wherein said first cleaning means comprises a cylindrical male brush dimensioned for snugly receiving the pipe end with a friction fit of the inner surface of the pipe end.

7. The hand tool of claim 6, wherein said first cleaning means comprises a pedestal to which said cylindrical brush is disposed.

8. The hand tool of claim 7, wherein said pedestal has a circular lip for guiding the outer surface of the pipe end over said brush.

9. The hand tool of claim 1, further comprising:

(a) a second grippable member rotatably connected to said first end portion on said second longitudinal side;

(b) second cleaning means connected to said second end portion on said first longitudinal side for receiving the pipe end in a direction transverse to said longitudinal member and for cleaning a surface of the pipe end.

10. The hand tool of claim 1, wherein said first cleaning means and said second cleaning means are coaxially aligned in a direction transverse to said longitudinal member.

11. The hand tool of claim 1, wherein said first cleaning means is axially offset from said second cleaning means in a direction transverse to said longitudinal member.

12. The hand tool of claim 9, wherein said first cleaning means and said second cleaning means are coaxially aligned in a direction transverse to said longitudinal member.

13. The hand tool of claim 9, wherein said first cleaning means is axially offset from said second cleaning means in a direction transverse to said longitudinal member.

14. The hand tool of claim 1, wherein said first cleaning means is detachably attached to said second longitudinal side.

15. The hand tool of claim 9, wherein said second cleaning means is detachably attached to said first longitudinal side.

16. The hand tool of claim 1, wherein said first cleaning means is rotatable in radial increments relative to said second longitudinal side by a ratchet mechanism.

17. The hand tool of claim 9, wherein said second cleaning means is rotatable in radial increments relative to said first longitudinal side by a ratchet mechanism.

18. The hand tool of claim 9, further comprising a conical pipe end shaper disposed at one of said first and second end portions.

19. The hand tool of claim 9, further comprising pivot means, disposed between said first and second end portions, for permitting said first and second end portions to be pivoted and disposed at an oblique angle to each other.

Fig 1

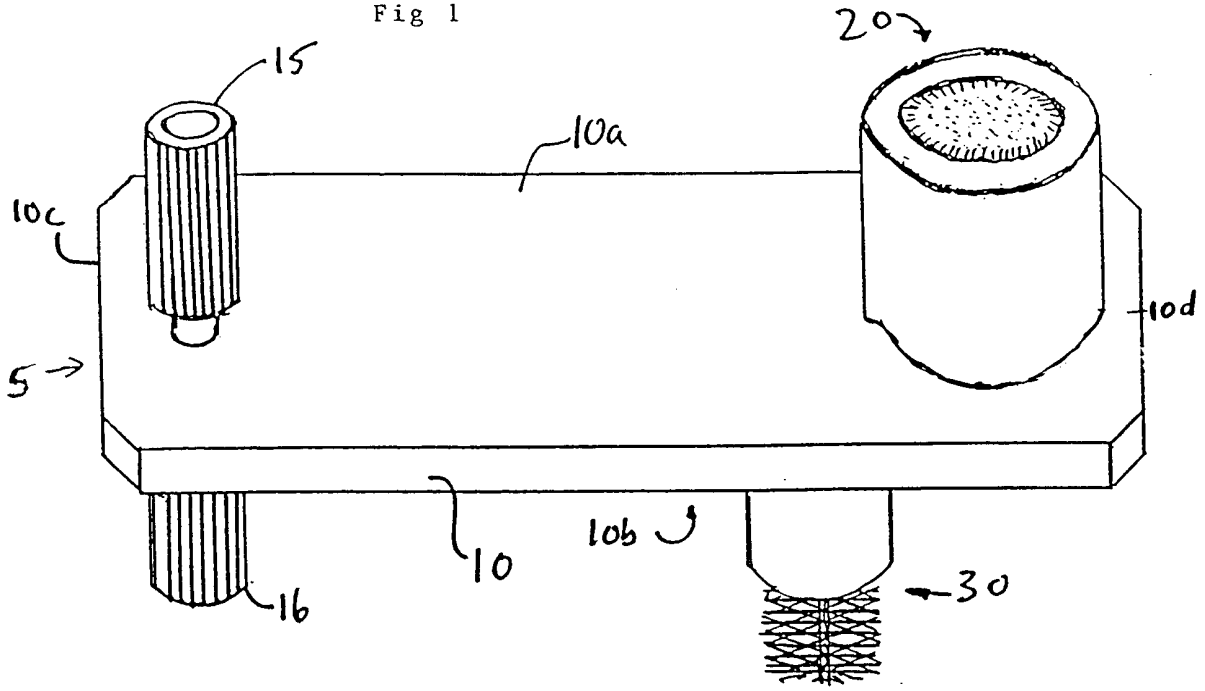

Fig. 2

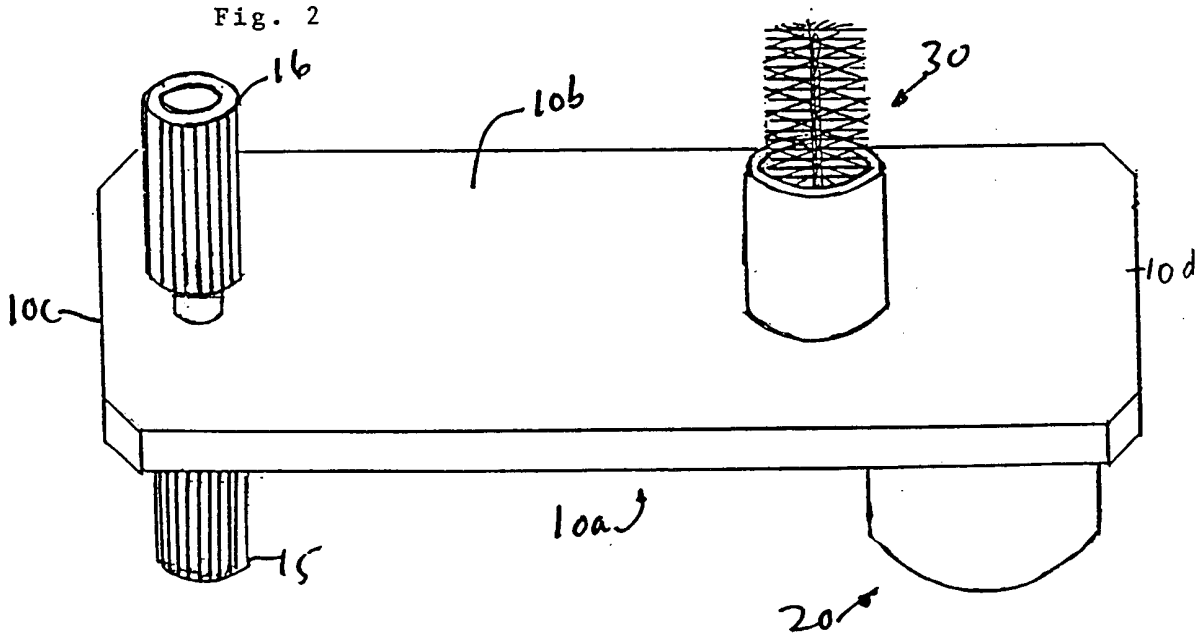

Fig. 3

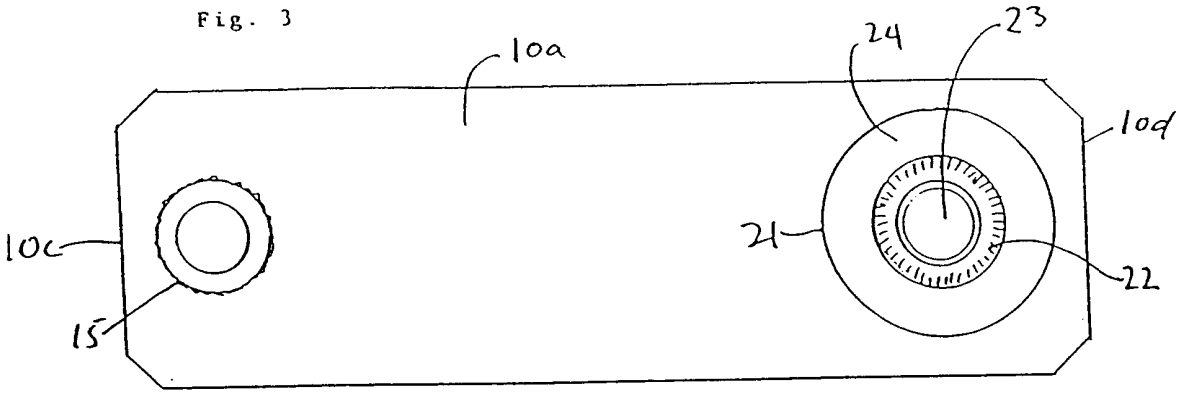

Fig. 4

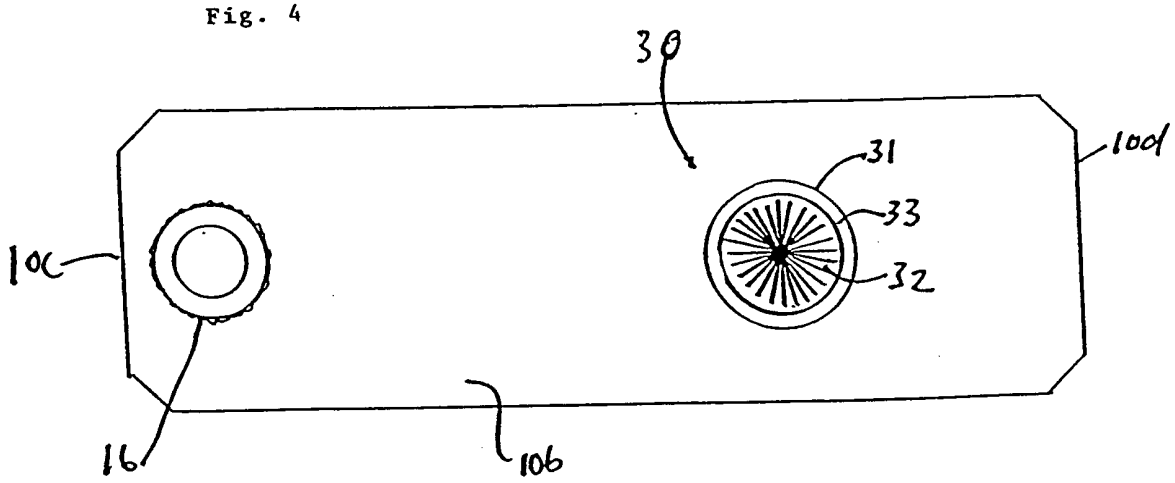

Fig. 5

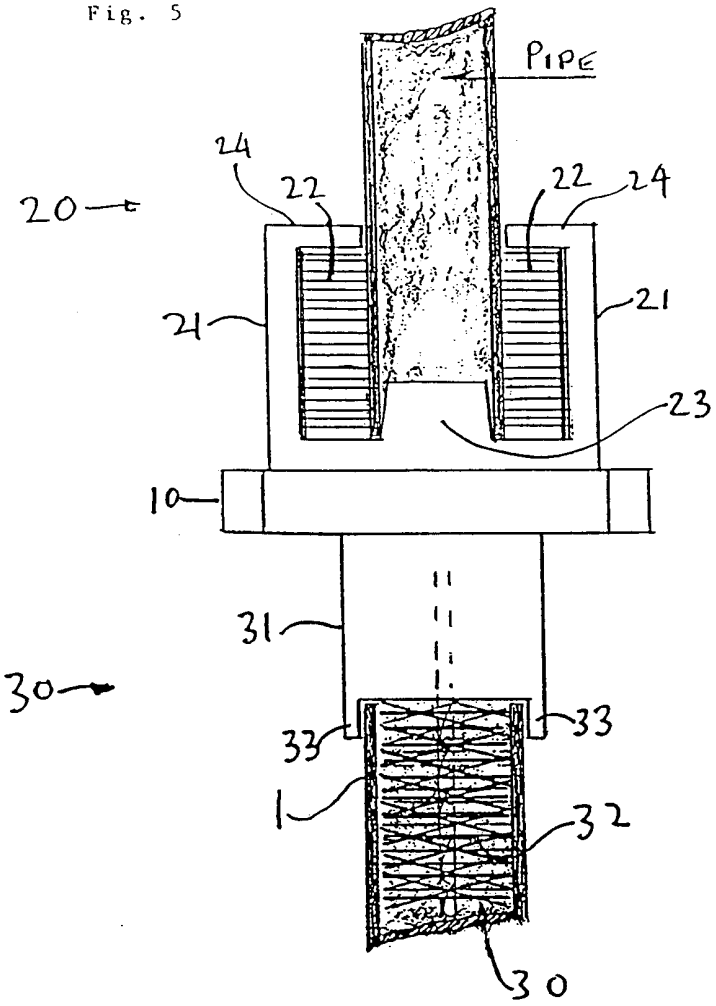
PIPE
24
22
22
24
20
21
21
23
10
31
30
33
33
1
32
30

Fig. 6

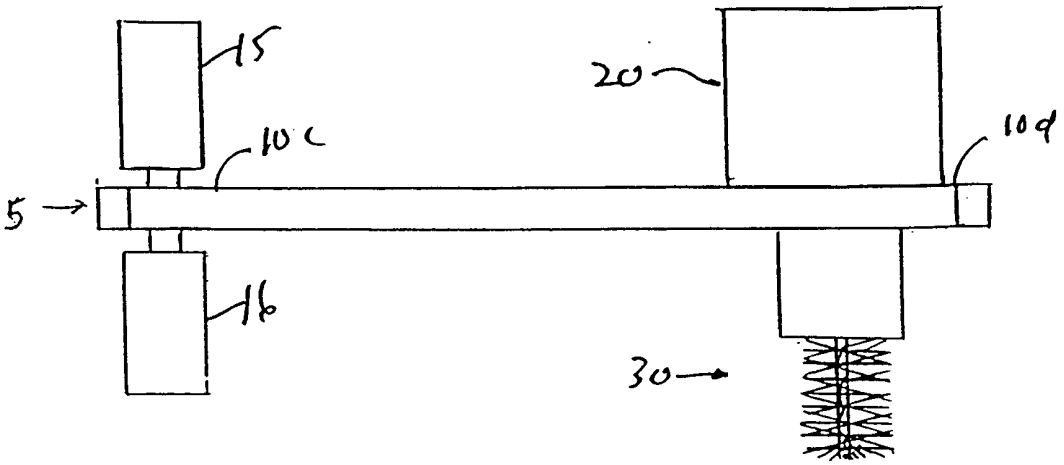
15
20
10c
10d
5
16
30

Fig. 7

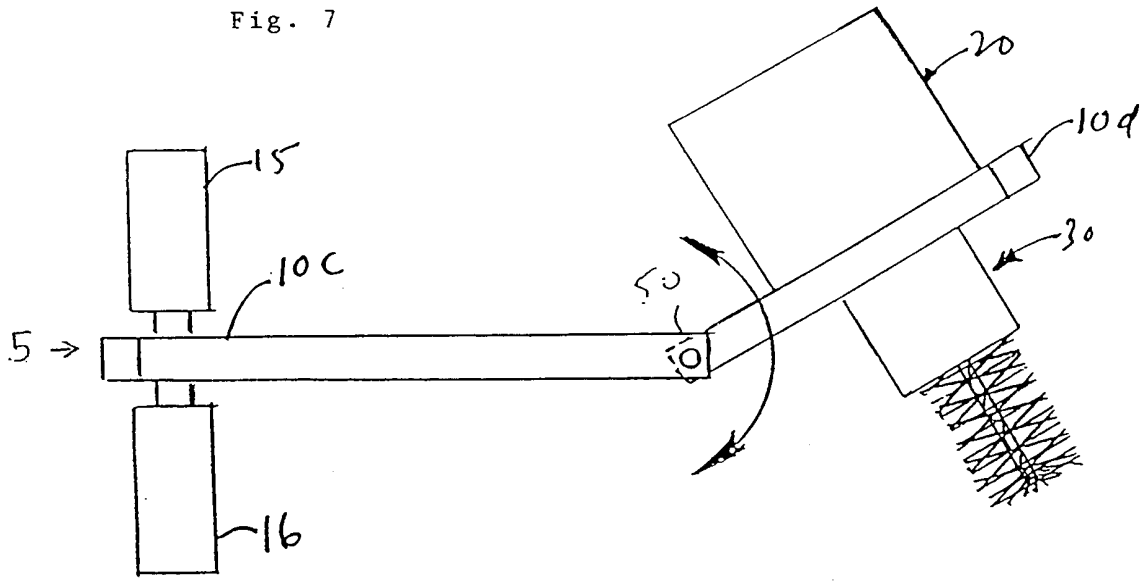

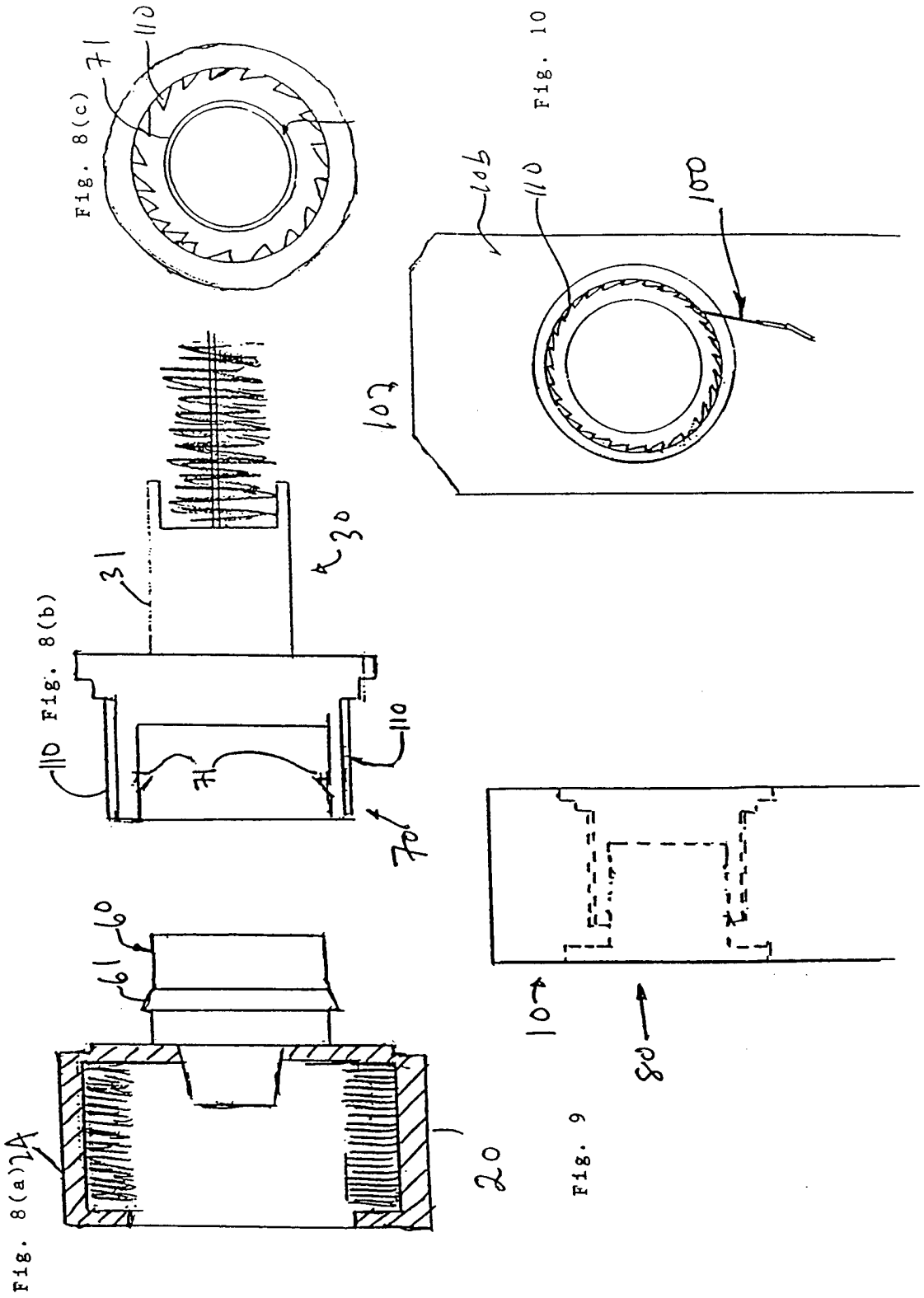
Fig. 8(c)
71
110
Fig. 10
105
110
100
107
31
30
Fig. 8(b)
110
71
70
60
61
Fig. 8(a)
24
20
107
80
Fig. 9

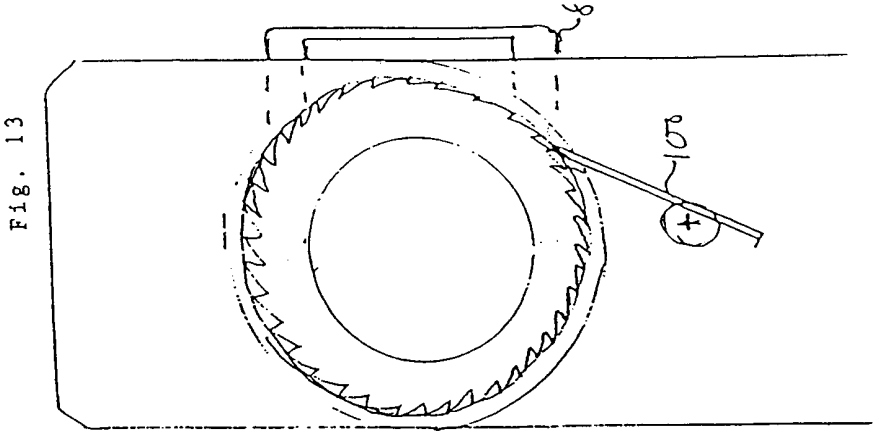

Fig. 13

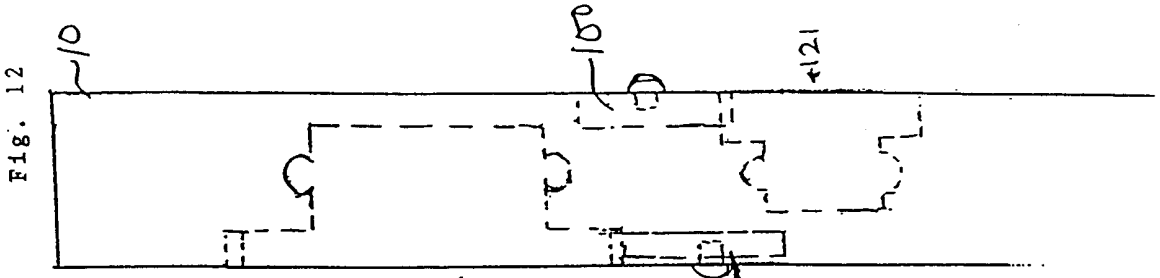

Fig. 12

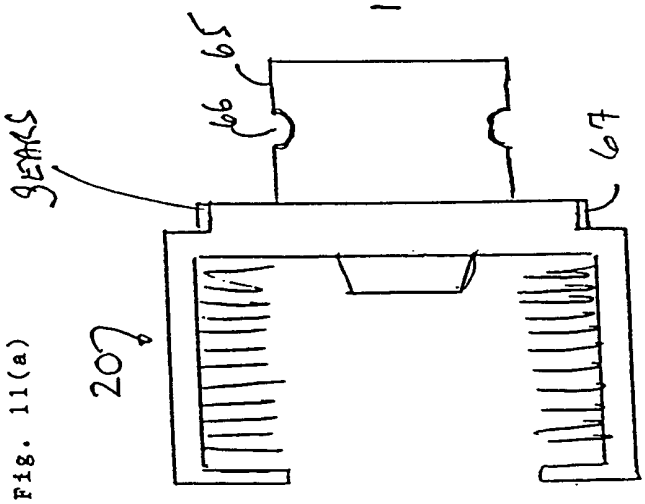

Fig. 11(a)

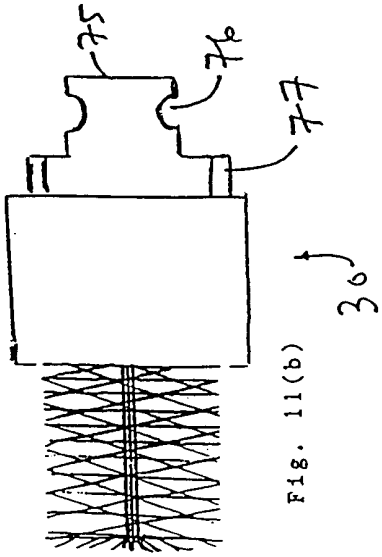

Fig. 11(b)

INTERNATIONAL SEARCH REPORT

Internationa plication No
PCT/CA 00/00837

A. CLASSIFICATION OF SUBJECT MATTER
IPC 7 B08B9/02

According to International Patent Classification (IPC) or to both national classification and IPC

B. FIELDS SEARCHED

Minimum documentation searched (classification system followed by classification symbols)
IPC 7 B08B A46B A47L B24B B23B

Documentation searched other than minimum documentation to the extent that such documents are included in the fields searched

Electronic data base consulted during the international search (name of data base and, where practical, search terms used)
EPO-Internal, WPI Data, PAJ

C. DOCUMENTS CONSIDERED TO BE RELEVANT

Category °	Citation of document, with indication, where appropriate, of the relevant passages	Relevant to claim No.
X	GB 2 241 450 A (F.J. GRUNDY) 4 September 1991 (1991-09-04) page 4, paragraph 3 page 5, paragraph 4 -page 6; figure 2 ---	1-3,14
X	DATABASE WPI Section PQ, Week 8445 Derwent Publications Ltd., London, GB; Class P43, AN 84-280842 XP002152267 & SU 1 077 668 A (VOLG TRACTOR COMP), 7 March 1984 (1984-03-07)	1,6
A	abstract --- -/--	9,19

[X] Further documents are listed in the continuation of box C.

[X] Patent family members are listed in annex.

° Special categories of cited documents :

"A" document defining the general state of the art which is not considered to be of particular relevance

"E" earlier document but published on or after the international filing date

"L" document which may throw doubts on priority claim(s) or which is cited to establish the publication date of another citation or other special reason (as specified)

"O" document referring to an oral disclosure, use, exhibition or other means

"P" document published prior to the international filing date but later than the priority date claimed

"T" later document published after the international filing date or priority date and not in conflict with the application but cited to understand the principle or theory underlying the invention

"X" document of particular relevance; the claimed invention cannot be considered novel or cannot be considered to involve an inventive step when the document is taken alone

"Y" document of particular relevance; the claimed invention cannot be considered to involve an inventive step when the document is combined with one or more other such documents, such combination being obvious to a person skilled in the art.

"&" document member of the same patent family

Date of the actual completion of the international search	Date of mailing of the international search report
8 November 2000	17/11/2000

Name and mailing address of the ISA	Authorized officer
European Patent Office, P.B. 5818 Patentlaan 2 NL - 2280 HV Rijswijk Tel. (+31-70) 340-2040, Tx. 31 651 epo nl, Fax: (+31-70) 340-3016	Leitner, J

1

Form PCT/ISA/210 (second sheet) (July 1992)

INTERNATIONAL SEARCH REPORT

Internatior \pplication No
PCT/CA 00/00837

C.(Continuation) DOCUMENTS CONSIDERED TO BE RELEVANT

Category °	Citation of document, with indication,where appropriate, of the relevant passages	Relevant to claim No.
X Y A	US 2 383 464 A (C.E. BROWN) 28 August 1945 (1945-08-28) the whole document	1,2,6,11 5,7,8, 10,14,16 9
Y	US 5 058 327 A (J. BUCHANAN) 22 October 1991 (1991-10-22) column 1, line 60 -column 2, line 33 figures 1,2	7,8
Y	US 5 269 104 A (A. DIBIAGIO) 14 December 1993 (1993-12-14) column 3, line 3 -column 4, line 14 figures	5,10,14, 16

1

INTERNATIONAL SEARCH REPORT

Information on patent family members

International application No
PCT/CA 00/00837

Patent document cited in search report		Publication date	Patent family member(s)	Publication date
GB 2241450	A	04-09-1991	NONE	
SU 1077668	A	07-03-1984	NONE	
US 2383464	A	28-08-1945	NONE	
US 5058327	A	22-10-1991	NONE	
US 5269104	A	14-12-1993	NONE	