(12) STANDARD PATENT (11) Application No. **AU 2011204560 B2**
(19) AUSTRALIAN PATENT OFFICE

(54) Title
Wind power plant

(51) International Patent Classification(s)
F03D 11/00 (2006.01)

(21) Application No: **2011204560** (22) Date of Filing: **2011.01.10**

(87) WIPO No: **WO11/083156**

(30) Priority Data

(31) Number	(32) Date	(33) Country
10 2010 000 756.0	**2010.01.08**	**DE**

(43) Publication Date: **2011.07.14**
(44) Accepted Journal Date: **2014.07.31**

(71) Applicant(s)
Aloys Wobben

(72) Inventor(s)
Roer, Jochen

(74) Agent / Attorney
Pizzeys, PO Box 291, WODEN, ACT, 2606

(56) Related Art
DE 10233947 A1
DE 102007042338 A1
WO 2009/115100 A1
US 2008/0265585 A1

(12) NACH DEM VERTRAG ÜBER DIE INTERNATIONALE ZUSAMMENARBEIT AUF DEM GEBIET DES PATENTWESENS (PCT) VERÖFFENTLICHTE INTERNATIONALE ANMELDUNG

(19) Weltorganisation für geistiges Eigentum
Internationales Büro

(43) Internationales Veröffentlichungsdatum
14. Juli 2011 (14.07.2011)

PCT

(10) Internationale Veröffentlichungsnummer
WO 2011/083156 A3

(51) Internationale Patentklassifikation:
F03D 11/00 (2006.01)

(21) Internationales Aktenzeichen: PCT/EP2011/050202

(22) Internationales Anmeldedatum:
10. Januar 2011 (10.01.2011)

(25) Einreichungssprache: Deutsch

(26) Veröffentlichungssprache: Deutsch

(30) Angaben zur Priorität:
10 2010 000 756.0
8. Januar 2010 (08.01.2010) DE

(71) Anmelder *(für alle Bestimmungsstaaten mit Ausnahme von US)*: **WOBBEN, Aloys** [DE/DE]; Argestraße 19, 26607 Aurich (DE).

(72) Erfinder; und

(75) Erfinder/Anmelder *(nur für US)*: **RÖER, Jochen** [DE/DE]; Eichhörnchenweg 12, 27777 Ganderkesee (DE).

(74) Anwälte: **EISENFÜHR SPEISER & PARTNER** et al.; Marc Gueltzow, Postfach 10 60 78, 28060 Bremen (DE).

(81) Bestimmungsstaaten *(soweit nicht anders angegeben, für jede verfügbare nationale Schutzrechtsart)*: AE, AG, AL, AM, AO, AT, AU, AZ, BA, BB, BG, BH, BR, BW, BY, BZ, CA, CH, CL, CN, CO, CR, CU, CZ, DE, DK, DM, DO, DZ, EC, EE, EG, ES, FI, GB, GD, GE, GH, GM, GT, HN, HR, HU, ID, IL, IN, IS, JP, KE, KG, KM, KN, KP, KR, KZ, LA, LC, LK, LR, LS, LT, LU, LY, MA, MD, ME, MG, MK, MN, MW, MX, MY, MZ, NA, NG, NI, NO, NZ, OM, PE, PG, PH, PL, PT, RO, RS, RU, SC, SD, SE, SG, SK, SL, SM, ST, SV, SY, TH, TJ, TM, TN, TR, TT, TZ, UA, UG, US, UZ, VC, VN, ZA, ZM, ZW.

(84) Bestimmungsstaaten *(soweit nicht anders angegeben, für jede verfügbare regionale Schutzrechtsart)*: ARIPO (BW, GH, GM, KE, LR, LS, MW, MZ, NA, SD, SL, SZ, TZ, UG, ZM, ZW), eurasisches (AM, AZ, BY, KG, KZ, MD, RU, TJ, TM), europäisches (AL, AT, BE, BG, CH, CY, CZ, DE, DK, EE, ES, FI, FR, GB, GR, HR, HU, IE, IS, IT, LT, LU, LV, MC, MK, MT, NL, NO, PL, PT, RO, RS, SE, SI, SK, SM, TR), OAPI (BF, BJ, CF, CG, CI, CM, GA, GN, GQ, GW, ML, MR, NE, SN, TD, TG).

Veröffentlicht:

— *mit internationalem Recherchenbericht (Artikel 21 Absatz 3)*

— *vor Ablauf der für Änderungen der Ansprüche geltenden Frist; Veröffentlichung wird wiederholt, falls Änderungen eingehen (Regel 48 Absatz 2 Buchstabe h)*

[Fortsetzung auf der nächsten Seite]

(54) **Title**: WIND POWER PLANT

(54) **Bezeichnung** : WINDENERGIEANLAGE

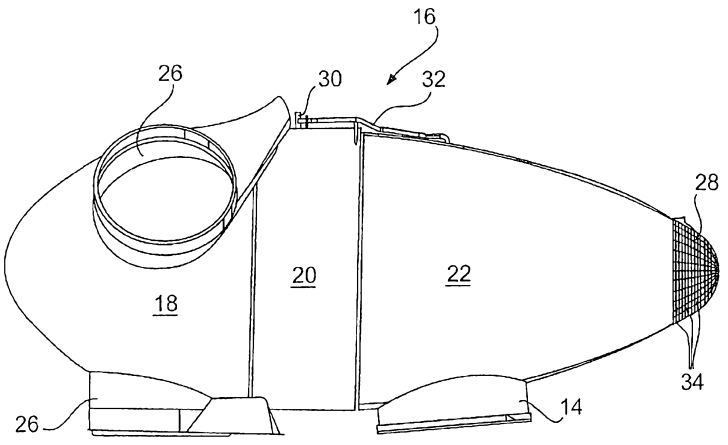

Fig. 2

(57) **Abstract**: The invention relates to a wind power plant (10), comprising a nacelle (16) having at least one liquid-cooled component and a heat exchanger (28). In order to simplify the transport and design of a wind power plant comprising a heat exchanger and thus eliminate sources of error, or at least reduce said sources of error, the heat exchanger is integrated in the outside contour of the nacelle in the wind power plant of the type mentioned above. The invention is based on the realization that in such a way the transport and handling of the nacelle requires no significant modifications, yet the heat exchanger can be installed in the factory as part of the assembly of the nacelle and tested for flawless functioning. This simplifies the transport and design of the wind power plant and, at the same time, eliminates possible sources of error.

(57) **Zusammenfassung**:

[Fortsetzung auf der nächsten Seite]

WO 2011/083156 A3

WO 2011/083156 A3

(88) **Veröffentlichungsdatum des internationalen Recherchenberichts**:

5. Januar 2012

Die vorliegende Erfindung betrifft eine Windenergieanlage (10) mit einer Gondel (16) mit wenigstens einer flüssigkeitsgekühlten Komponente und mit einem Rückkühler (28). Um Transport und Aufbau einer Windenergieanlage mit einem Rückkühler zu vereinfachen und so Fehlerquellen zu beseitigen oder wenigstens zu verringern, ist bei der Windenergieanlage der eingangs genannten Art der Rückkühler in die äußere Kontur der Gondel integriert. Dabei liegt der vorliegenden Erfindung die Erkenntnis zugrunde, dass dadurch bei Transport und Handhabung der Gondel keine nennenswerten Änderungen erforderlich sind, gleichzeitig der Rückkühler aber beim Zusammenbau der Gondel im Werk mit installiert werden und auf einwandfreie Funktion getestet werden kann. Dies führt zu einer Vereinfachung bei Transport und Aufbau der Windenergieanlage und beseitigt gleichzeitig mögliche Fehlerquellen.

Aloys Wobben
Argestrasse 19, 26607 Aurich

Wind power plant

The present invention concerns a wind power installation comprising a pod with at least one fluid-cooled component and a heat exchanger. Such wind power installations are known in large numbers in the state of the art.

Wind power installations with different pod or gondola shapes are also known. In that respect substantially rectangular (box-shaped) pods or gondolas are represented as well as cylindrical pods and pods approximating to a drop shape.

As a heat exchanger must be able to give off the heat to be dissipated to the environment in order to be able to perform its function, it is usual to arrange it on the top side of the pod in wind power installations. That is effected for example when erecting a wind power installation on the building site so that the heat exchanger arranged on the pod does not cause difficulties in transporting and handling the pod or so that it cannot be damaged in that case. Therefore the heat exchanger is usually fitted in place during erection of the wind power installation on the building site. In that case however a wide range of different mounting errors can occur, which adversely affect satisfactory functioning of the heat exchanger.

Therefore the object of the present invention is to simplify transport and construction of a wind power installation having a heat exchanger and thus to eliminate or at least reduce sources of error.

In a wind power installation of the kind set forth in the opening part of this specification, that is achieved in accordance with the invention by integrating the heat exchanger into the external contour of the pod.

The object of the invention is attained by a wind power installation as set forth in claim 1.

Accordingly there is provided a wind power installation comprising a pod having at least one fluid-cooled component and a heat exchanger. In

that case the heat exchanger is integrated into the external contour of the pod.

In an aspect of the invention the heat exchanger has at least one ribbed tube.

In a further aspect of the invention the heat exchanger is formed from a ribbed tube which at least partially is continuously wound.

In a further aspect of the invention the heat exchanger has a plurality of ribbed tubes arranged in parallel relationship.

In a further aspect of the invention the heat exchanger is arranged on a carrier.

In a further aspect of the invention the carrier is in the form of a peripherally extending opening in the contour of the pod.

In a further aspect of the invention the carrier is in the form of a separate pod component.

In a further aspect of the invention the wind power installation, in the direction of a longitudinal axis of the pod, has a hold-down means which holds the ribbed tube in its installation position.

In a further aspect of the invention the wind power installation has a fan arranged in such a way that the air that it draws in flows around the heat exchanger.

In that respect the present invention is based on the realisation that in that way when transporting and handling the pod, there is no need for any alterations worth mentioning, at the same time however the heat exchanger can also be installed upon assembly of the pod in the factory and can be tested for satisfactory functioning. That leads to a simplification in transporting and constructing the wind power installation and at the same time eliminates possible error sources.

In a preferred embodiment the heat exchanger can be formed from at least one ribbed tube. Such a ribbed tube can be easily bent in such a way that it follows the contour of the pod and can therefore be well adapted to the pod contour.

A high level of reliability is afforded if the heat exchanger is formed from a continuously wound ribbed tube because then it is possible to

eliminate connecting locations and thus possible error locations at which for example leaks can occur.

To provide an adequate cooling efficiency the heat exchanger can also be formed from a plurality of ribbed tubes arranged in parallel relationship, thus affording a larger available cross-section in which the cooling fluid can be cooled.

Particularly preferably the heat exchanger is arranged on a carrier. In that way that heat exchanger can be pre-produced in the form of a structural unit and mounted in the form of an attachment component to the pod. In that way functional testing can for example already be effected before it is attached to the pod so that a reliable heat exchanger is certain to be available when the pod is assembled.

In an alternative embodiment the carrier can be in the form of a peripherally extending opening in the contour of the pod. It is possible in that way to avoid sources of error when attaching the separately produced cooler, such as for example incorrect positioning, damage caused by failure to pay proper attention during transport, and so forth.

To hold the ribbed tube or tubes of the heat exchanger in an intended installation position, there can be hold-down means which are distributed over the periphery of the heat exchanger and arranged substantially in the direction of the longitudinal axis of the pod.

In a preferred development of the invention there is provided a fan so arranged that the air drawn in thereby flows around the heat exchanger. That provides an active heat exchanger and a defined level of cooling efficiency for the heat exchanger.

An advantageous embodiment is illustrated in the Figures in which:

Figure 1 shows a simplified view of a wind power installation,

Figure 2 shows a view on an enlarged scale of the pod of the wind power installation of Figure 1,

Figure 3 shows a side view of a heat exchanger according to the invention in the form of an attachment component,

Figure 4 shows a plan view of a heat exchanger according to the invention, and

Figure 5 shows a perspective view of the heat exchanger with the flow configuration of the cooling air sucked in by the fan.

Figure 1 shows a greatly simplified view of a wind power installation 10. The pylon 12 carries the pod 16 (alternatively the term machine housing can also be used for the pod). The pod 16 is mounted on a head of the pylon 12 by means of an azimuth bearing (not shown) so that it is possible to provide wind direction tracking by way of azimuth drives (also not shown). The transition between the pod 16 and the pylon 12 is covered by a pod skirt 14 and is thus protected from the influences of weather.

The pod 16 also includes the hub (also not shown) to which the rotor blades 24 are mounted. The hub (with the front part of the pod 16) is caused to rotate by the rotor blades 24. The rotary movement is transmitted to the rotor of the generator so that the wind power installation 10 generates electrical energy when there is a sufficient wind speed.

Figure 2 shows a more detailed view of the pod 16 of the wind power installation of Figure 1. The pod has a pod skirt 14 which covers over the transition from the pod 16 to the pylon (not shown in this Figure). The pod 16 has a front pod part 18 and a rear pod part 22. The generator 20 can be disposed between those two pod parts. The generator 20 can optionally be in the form of a ring generator.

Rotor blade domes 26 with blade enlargement portions can be provided on the front pod part 18. The respective rotor blade roots of the rotor blades (not shown in this Figure) can be guided into those rotor blade domes 26 and fastened to the rotor hub which transmits the rotary movement by way of a transmission or also directly, without a transmission, to the rotor as the rotary part of the generator 20 (not shown in this Figure).

The electrical energy generated when there is a sufficient wind speed is generated in the generator 20 and depending on the respective concept of the wind power installation can be fed by way of a transformer (not shown) for example directly into the network or can be converted into a direct current by way of rectifiers (also not shown) and then fed into the network again by way of inverters at a suitable frequency and phase

position. A part of those described components can be disposed in the pod 16. At any event however in dependence on the power generated in the generator 20, heat due to energy losses is produced, which has to be dissipated by cooling. That cooling can involve air cooling; it can however also use a cooling fluid such as for example water. It is precisely when a high thermal loading is involved that air cooling may be inadequate and fluid cooling can be required. Accordingly the generator 20 can have a generator cooling connection 30 from which a connection 32 is taken to the heat exchanger 28 at one side of the pod (at the right in the Figure). The cooling fluid flows through the generator cooling connection 30, the connection 32 and through the heat exchanger 28. The heat exchanger 28 is once again exposed to the flow of air and is of a sufficiently large surface area to reliably implement the required dissipation of heat so that the correspondingly cooled cooling fluid can again be fed to the generator in order to continue to reliably dissipate the heat due to energy losses.

The heat exchanger 28 which in the present example is formed from ribbed tubes 34 is fitted into or on to the contour of the pod 16 so that the aerodynamically favourable shape of the pod 16 is not detrimentally altered by the heat exchanger 28. In other words the heat exchanger thus replaces a part of the pod and is matched to the shape thereof so that the original shape of the pod is maintained to achieve an as aerodynamic shape as possible. In this case the heat exchanger can be provided at the end of the pod, opposite to the rotor 18, and can be of a dome-shaped configuration. Alternatively or additionally the heat exchanger can be at least partially oval or elliptical in cross-section. Alternatively the heat exchanger can be of a cap-shaped configuration. That provides for adequate cooling of the cooling fluid utilising the advantageous shape of the pod 16. The heat exchanger can also be of an elliptical external contour.

Figure 3 shows a heat exchanger 28 according to the invention in the form of a separate attachment component. That heat exchanger according to the invention has ribbed tubes 34 which are wound on to a carrier in such a way that the external contour is a continuation of the pod contour, that is substantially true to the shape thereof, that is to say the contour of

the heat exchanger is oval (in cross-section), dome-shaped or cap-shaped. So that the ribbed tubes 34 remain in position there are provided hold-down means 36 which hold the ribbed tubes 34 in the predetermined position. A fan 38 can be arranged downstream of the ribbed tubes 34 in the flow direction, the fan 38 drawing in air in such a way that it flows over the ribbed tubes 34 and thus the excess heat can be dissipated.

While Figure 3 shows a side view of an embodiment by way of example of a heat exchanger according to the invention Figure 4 shows a rear view, that is to say a view on to the heat exchanger 28, as is represented from the rear side of the pod. It will be noted in this respect however that, as in Figure 3, the pod is not shown. It is possible to clearly see in this Figure the ribbed tubes 34, the hold-down means 36 and the fan 38. This Figure also clearly shows a connecting box 40 to which all ribbed tubes 34 are connected. Through that connecting box 40 the cooling fluid can flow simultaneously through all ribbed tubes 34 so as to provide a sufficiently large flow cross-section to dissipate the required amount of heat to the ambient air by way of the heat exchanger 28. For that purpose the connecting box 40 is connected by way of a connection (not shown here) to the components to be cooled in the pod of the wind power installation.

A somewhat modified embodiment of the heat exchanger 28 according to the invention is shown in Figure 5. Figure 5 shows a perspective view, once again without the pod of the wind power installation. As already described above, the ribbed tubes 34 extend from the connecting box 40 so that the cooling fluid can simultaneously flow through them to be able to provide the required cooling efficiency. The fan 38 is again arranged at the end of the heat exchanger 28 and is provided with a cover 44 which allows the air flow 42 to be better guided.

When the fan 38 is set in operation it produces a flow of the ambient air over the surface of the ribbed tubes 34 in the direction indicated by arrows 42 so that active cooling can be implemented with that heat exchanger 28 according to the invention to dissipate the waste heat to the ambient air.

2011204560 28 Jun 2012

As the heat exchanger according to the invention is fitted into the external pod contour the external appearance of the wind power installation is at most slightly influenced, but is substantially retained. Accordingly the flow conditions at the pod are also substantially retained and at the same time an adequate cooling effect on the part of the heat exchanger 28 is achieved.

Throughout this specification and the claims which follow, unless the context requires otherwise, the word "comprise", and variations such as "comprises" and "comprising", will be understood to imply the inclusion of a stated integer or step or group of integers or steps but not the exclusion of any other integer or step or group of integers or steps.

The reference to any prior art in this specification is not, and should not be taken as, an acknowledgement or any form of suggestion that the prior art forms part of the common general knowledge in Australia. Further, the reference to any prior art in this specification is not, and should not be taken as, an acknowledgement or any form of suggestion that such art would be understood, ascertained or regarded as relevant by the skilled person in Australia

20112045600 04 Jul 2014

CLAIMS

1. A wind power installation comprising

a pod with at least one fluid-cooled component and a heat exchanger,

wherein the heat exchanger is integrated into the external contour of the pod; and

wherein the heat exchanger is arranged on a carrier, and the carrier is in the form of a separate pod attachment component.

2. A wind power installation according to claim 1 wherein the heat exchanger has at least one ribbed tube.

3. A wind power installation according to one of the preceding claims wherein the heat exchanger has a ribbed tube which is at least partially continuously wound.

4. A wind power installation according to one of claims 1 and 2 wherein the heat exchanger has a plurality of ribbed tubes arranged in parallel relationship.

5. A wind power installation according to claim 1 wherein the carrier is in the form of a peripherally extending opening in the contour of the pod.

6. A wind power installation according to one of claims 2 to 5 and further comprising hold-down means which are arranged in the direction of a longitudinal axis of the pod and which hold the ribbed tube or in the installation position thereof.

7. A wind power installation according to one of the preceding claims and further comprising a fan so arranged that the air drawn in thereby flows around the heat exchanger.

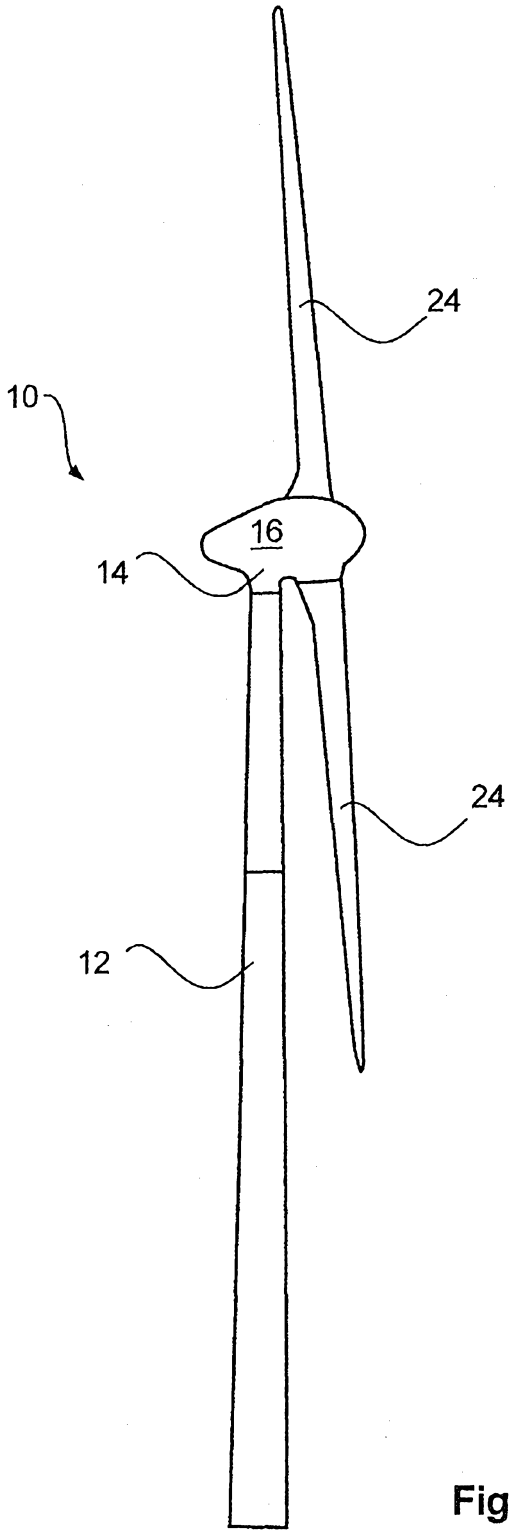

Fig. 1

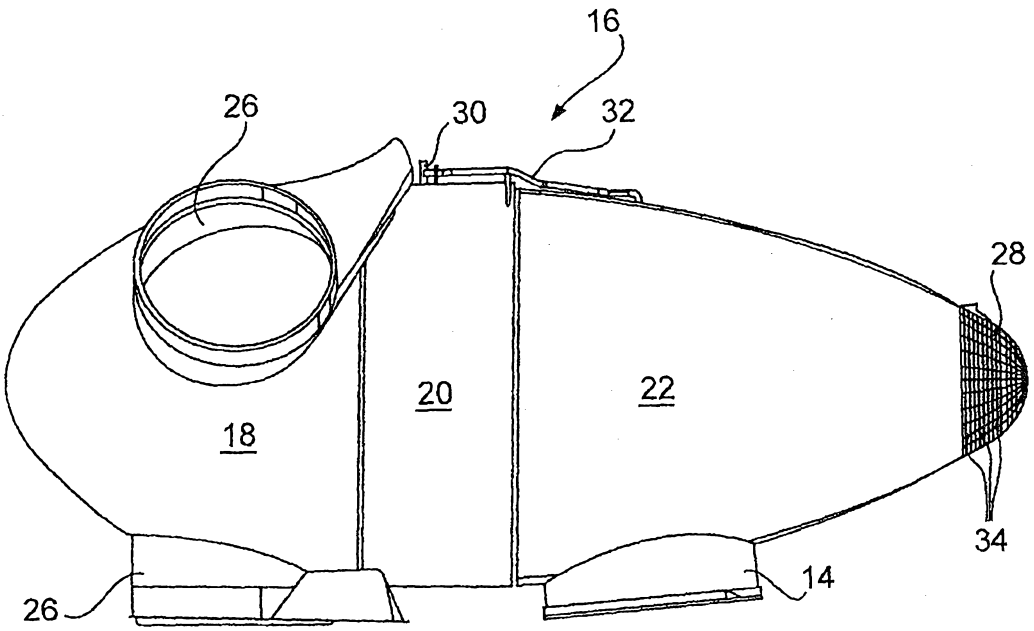

Fig. 2

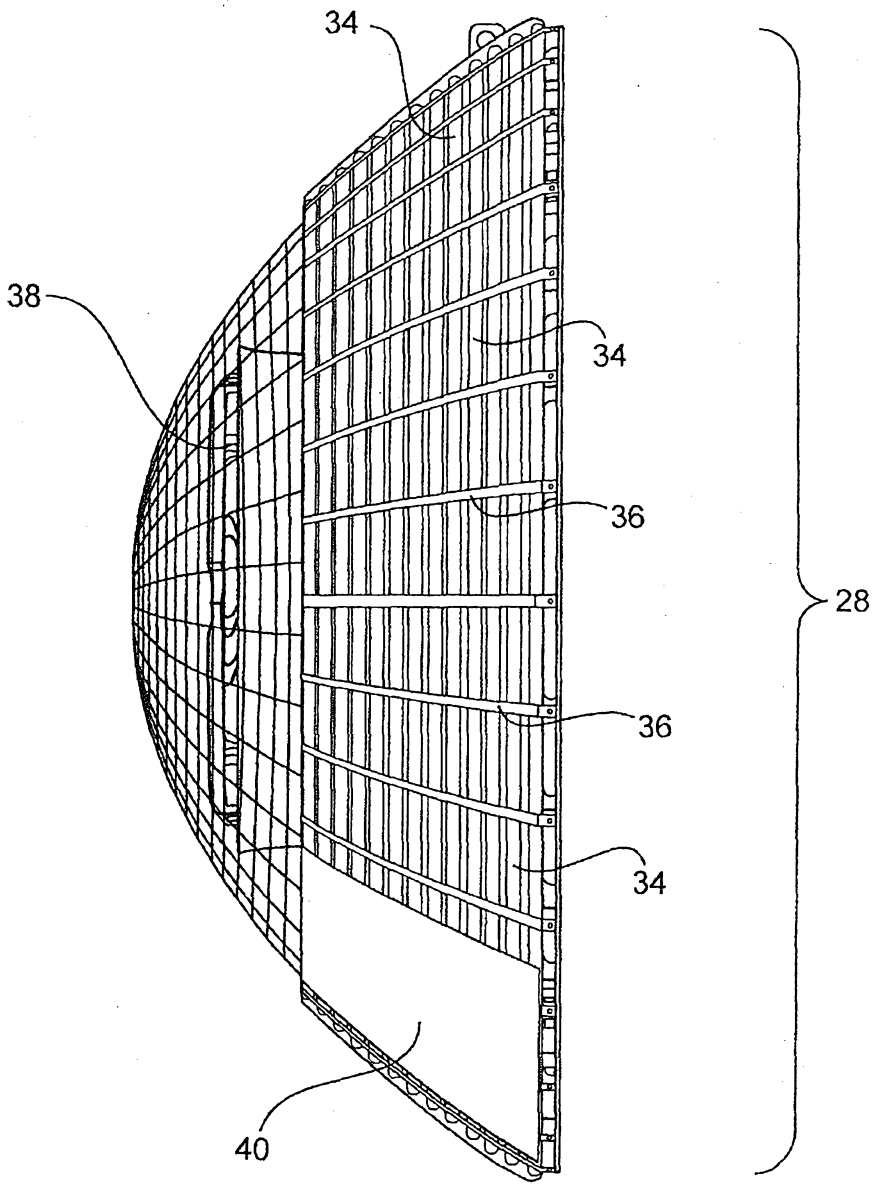

Fig. 3

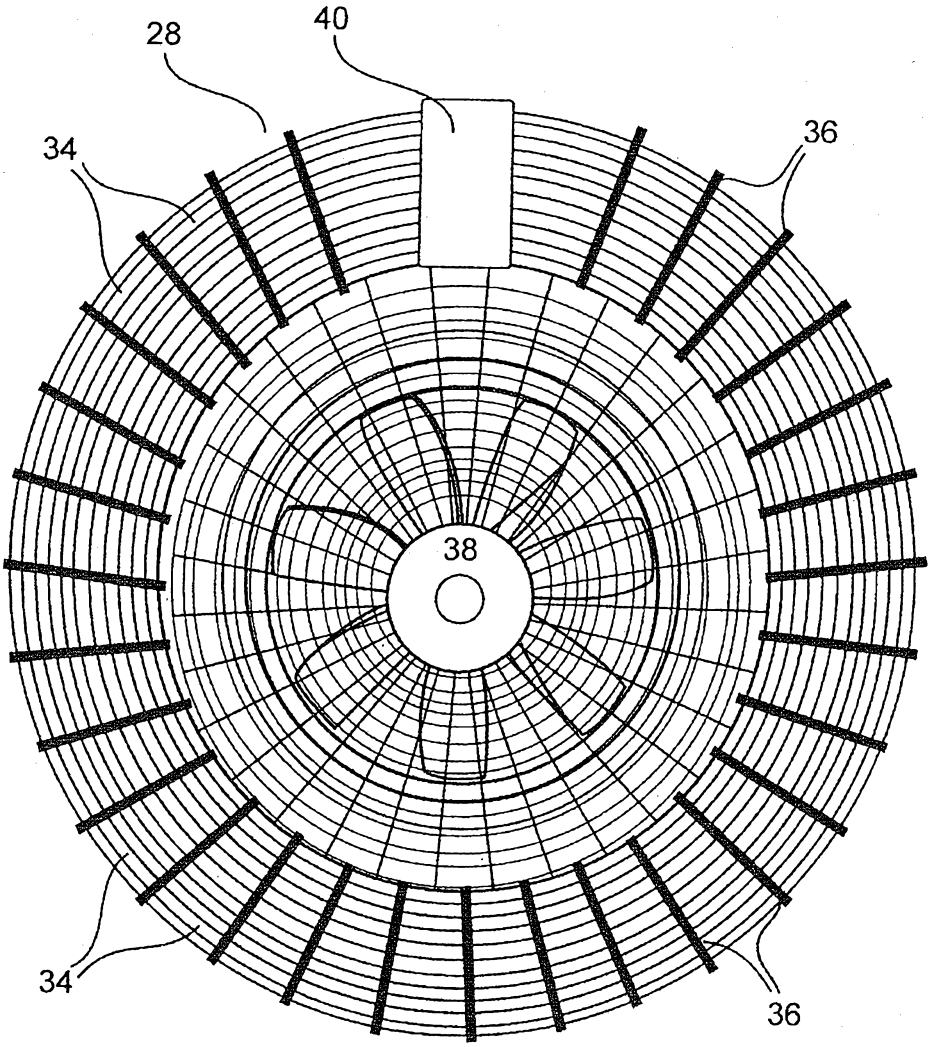

Fig. 4

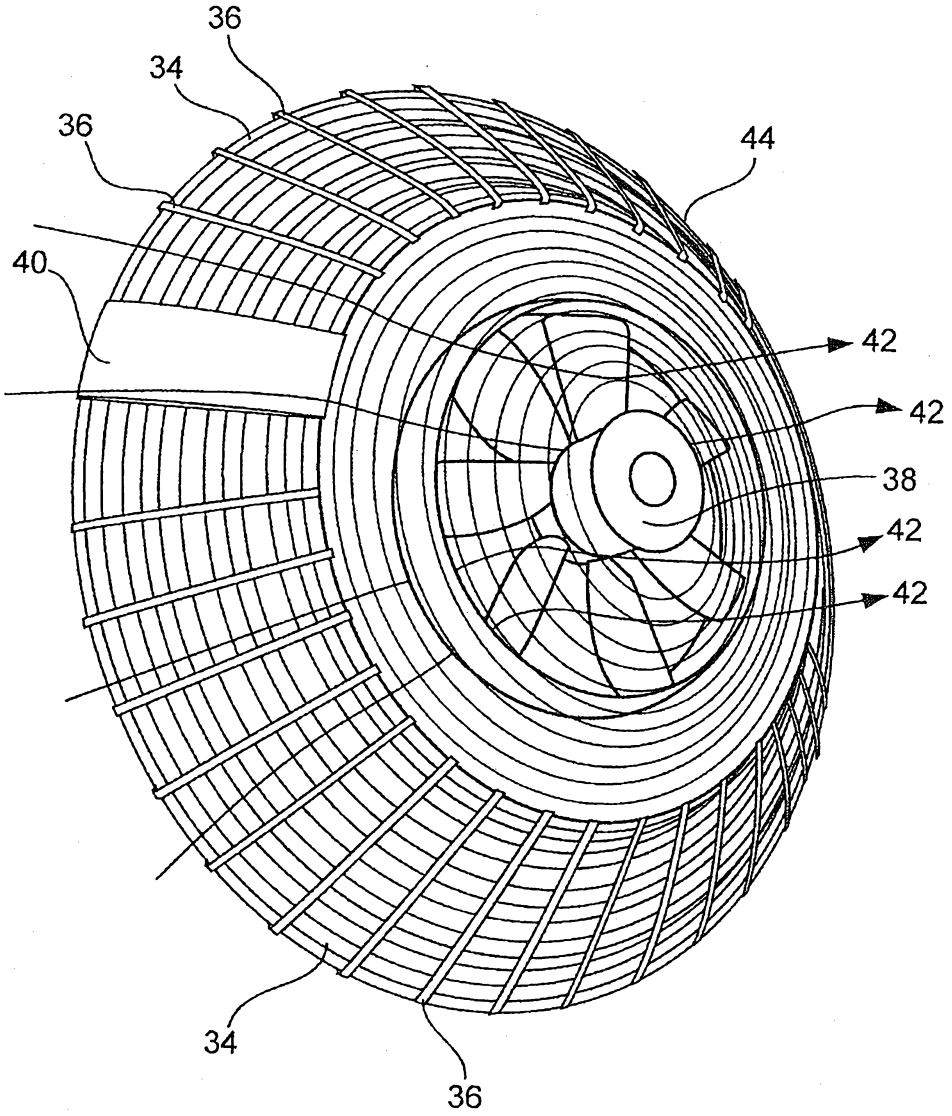

Fig. 5