(12) INTERNATIONAL APPLICATION PUBLISHED UNDER THE PATENT COOPERATION TREATY (PCT)

(19) World Intellectual Property Organization
International Bureau

(43) International Publication Date
28 August 2014 (28.08.2014)

WIPO | PCT

(10) International Publication Number
WO 2014/129993 A1

(51) International Patent Classification:
A61M 16/06 (2006.01) *A61M 16/01* (2006.01)

(21) International Application Number:
PCT/TR2014/000039

(22) International Filing Date:
19 February 2014 (19.02.2014)

(25) Filing Language: English

(26) Publication Language: English

(30) Priority Data:
2013/02066 21 February 2013 (21.02.2013) TR

(72) Inventor; and
(71) Applicant : **INCI, Kara** [TR/TR]; Selcuk Universitesi Tip Fakultesi Hastanesi, Anesteziyoloji ve reanimasyon ana bilim dali, 42000 Konya (TR).

(74) Agent: **AHMET, Akkas**; Ardicli MH. Gurbulut Sk. No:63, Konya Teknokent Safir Panorama Blok A2/z02, 42000 Konya (TR).

(81) Designated States *(unless otherwise indicated, for every kind of national protection available)*: AE, AG, AL, AM, AO, AT, AU, AZ, BA, BB, BG, BH, BN, BR, BW, BY, BZ, CA, CH, CL, CN, CO, CR, CU, CZ, DE, DK, DM, DO, DZ, EC, EE, EG, ES, FI, GB, GD, GE, GH, GM, GT, HN, HR, HU, ID, IL, IN, IR, IS, JP, KE, KG, KN, KP, KR, KZ, LA, LC, LK, LR, LS, LT, LU, LY, MA, MD, ME, MG, MK, MN, MW, MX, MY, MZ, NA, NG, NI, NO, NZ, OM, PA, PE, PG, PH, PL, PT, QA, RO, RS, RU, RW, SA, SC, SD, SE, SG, SK, SL, SM, ST, SV, SY, TH, TJ, TM, TN, TR, TT, TZ, UA, UG, US, UZ, VC, VN, ZA, ZM, ZW.

(84) Designated States *(unless otherwise indicated, for every kind of regional protection available)*: ARIPO (BW, GH, GM, KE, LR, LS, MW, MZ, NA, RW, SD, SL, SZ, TZ, UG, ZM, ZW), Eurasian (AM, AZ, BY, KG, KZ, RU, TJ, TM), European (AL, AT, BE, BG, CH, CY, CZ, DE, DK, EE, ES, FI, FR, GB, GR, HR, HU, IE, IS, IT, LT, LU, LV, MC, MK, MT, NL, NO, PL, PT, RO, RS, SE, SI, SK, SM, TR), OAPI (BF, BJ, CF, CG, CI, CM, GA, GN, GQ, GW, KM, ML, MR, NE, SN, TD, TG).

Declarations under Rule 4.17:

— *as to the identity of the inventor (Rule 4.17(i))*

Published:

— *with international search report (Art. 21(3))*

— *before the expiration of the time limit for amending the claims and to be republished in the event of receipt of amendments (Rule 48.2(h))*

WO 2014/129993 A1

(54) Title: THE PEDIATRIC MASK WITH FEEDING AND SEDATION FUNCTION

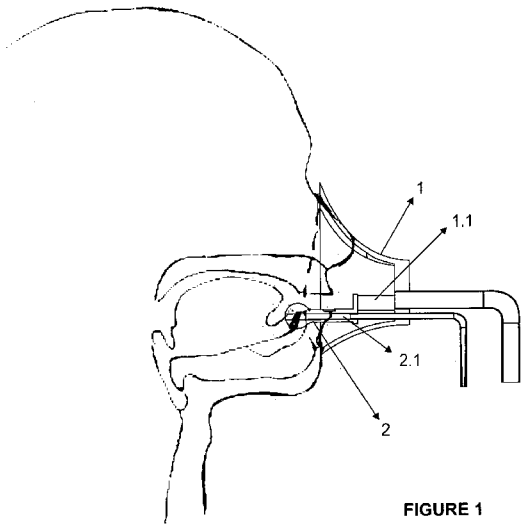

FIGURE 1

(57) Abstract: This innovation is related to the improvement of a mask, which is used for anesthesia in babies/children preoperatively or to provide oxygen therapy or drug therapy to the babies/children with asthma, dyspnea or similar disorders, that allows acceptance of the mask.

DESCRIPTION

THE PEDIATRIC MASK WITH FEEDING AND SEDATION FUNCTION

TECHNICAL FIELD

This invention is about the innovation that allows acceptance of mask comfortably in infants and children for anesthesia induction or for oxygen and inhaler treatment in some clinical situations such as asthma and dispnea

BACKGROUND OF THE INVENTION

Nowadays infant / children have diseases that require surgery. Anxiety in infant / children may cause difficulties during anesthesia induction. For anesthesia induction in infants / children anesthetic gases is most often given through the mask. It is known that application a foreign object like facial mask to infant/child face presents some challenges and dealing with these challenges such as psychological trauma is very diffucult.

The most worrisome situation for infant / children is separation anxiety from their parents before surgery and fasting.

For infants and children who are not used to mask this situation is quite traumatic and this condition can lead to psychological problems after the surgery.

In the prior technique; the most commonly used method is to give the mask to the infants'/childs' hand at the preoperative interview for helping the infant/child to be familiar to the anesthesia mask while they are playing with the mask.

But in the operating room, anxiety in infant/child is often unavoidable during the anesthesia induction with the anesthesia mask .

Inhalers are often used with the help of mask. Many difficulties encountered while inhaled drugs need to be applied at home by mothers / fathers of the infant / child who are not experts. These difficulties may adversely affect the treatment process. In the pediatric intensive care unit respiratory masks are required in treatment.of some respiratory diseases. In some cases inhaler treatment with mask can cause some problems such as interruption of

treatment for feeding purpose or not to feed patient while drugs were given by mask.

BRIEF DESCRIPTION OF THE INVENTION

Distrust against unfamiliar objects need to be overcome in infants and children. This invention is concerned with the specific design of the mask adapted with passifier which gives confidence to infant/child when used in anesthesia induction and alimentation during the inhaler tretment,

LIST OF FIGURES

Figure 1 The cross sectional view of application to infant/ child face

Figure 2 Assembled Overview

Figure 3 Section View

Figure 4 Exploded View

Figure 5 Pacifiers General View

Provision of shapes specified track number is given below.

1. Mask
   1.1. Place of Unification
2. Pacifier
   2.1. The feeding canal

DETAILED EXPLANATION OF THE INNOVATION

This innovation is characterized by the mask (1) which is joining with pacifier (2) that has plugged/unplugged (1.1) feeding canal (2.1). The pacifier, all babies and children are familiar and soothe their discomfort with is best helper for the parents. Babies' head and tongue are not proportional to the body and they are large, their larynx suited forwardly and superiorly (at the level of the C6 in adults and at the level of the C4 in babies). The anatomical features of the larynx make babies do nasal breathing therefore it is considered this reality when any management is carried out (applied) on these group of patients, babies. The mask in the shape of the pacifier, which is pacified the baby/child at

the same time is aimed to make respiratory treatment or facilitate the anesthesia should be comprised these specifications. Otherwise the goal could not be achieved.

Available masks cover the nose so using these masks can bring about choking sensation to babies/children and make the some application difficult. But newly designed mask with (plugged/unplugged) pacifier can resolve all the technical problems.

During mask application, practitioner can cause soft tissue damage beneath the mandible of babies/children in cases of the using his/her hand even can cause upper respiratory tract obstruction. However with newly designed mask, just as babies/children suck the mask, it can be well suited to the face by itself. When the respiratory treatments are applied in intensive care unit, babies/children can be fed easily with the assistance of the pacifier which has feeding canal and it cannotinterrupt the treatment.

It will be appropriate to manufacture the mask in the shape of the pacifier with silicon-based and transparent materials because it is vital to realize earlier or prevent the some adverse conditions which can be obstructed the airway (e.g. secretion, vomit) during the treatment.

CLAIMS

1. This pediatric mask has feeding, pacification function, its feature; it is characterized with pacifier (2).
2. Above mentioned is the pacifier (2) and its feature; it is characterized by plugged/unplugged (1.1) to the mask (1) at the junction part.
3. Above mentioned is the pacifier (2) and its feature; it is characterized by the feeding canal (2.1) which gives the possibility of the feeding without interrupting the treatment when respiratory treatment is conducted in intensive care unit

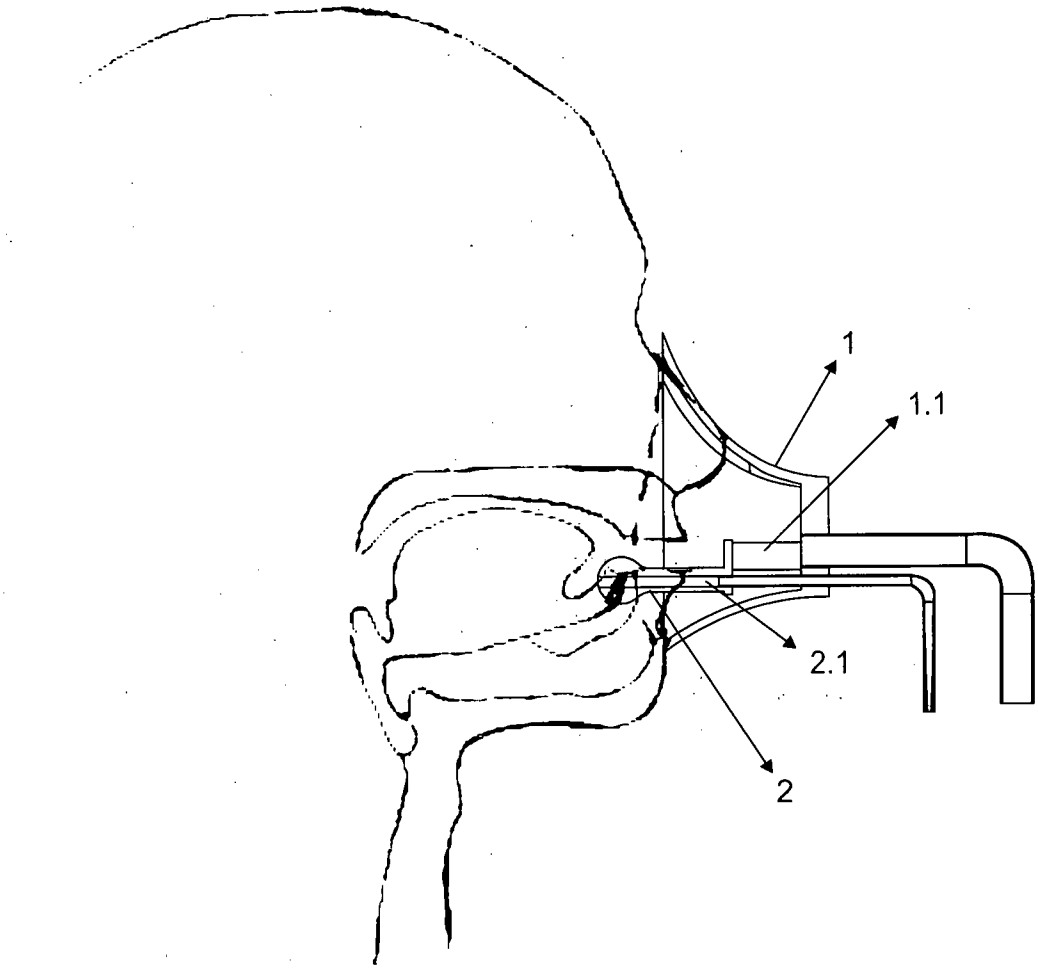

FIGURE 1

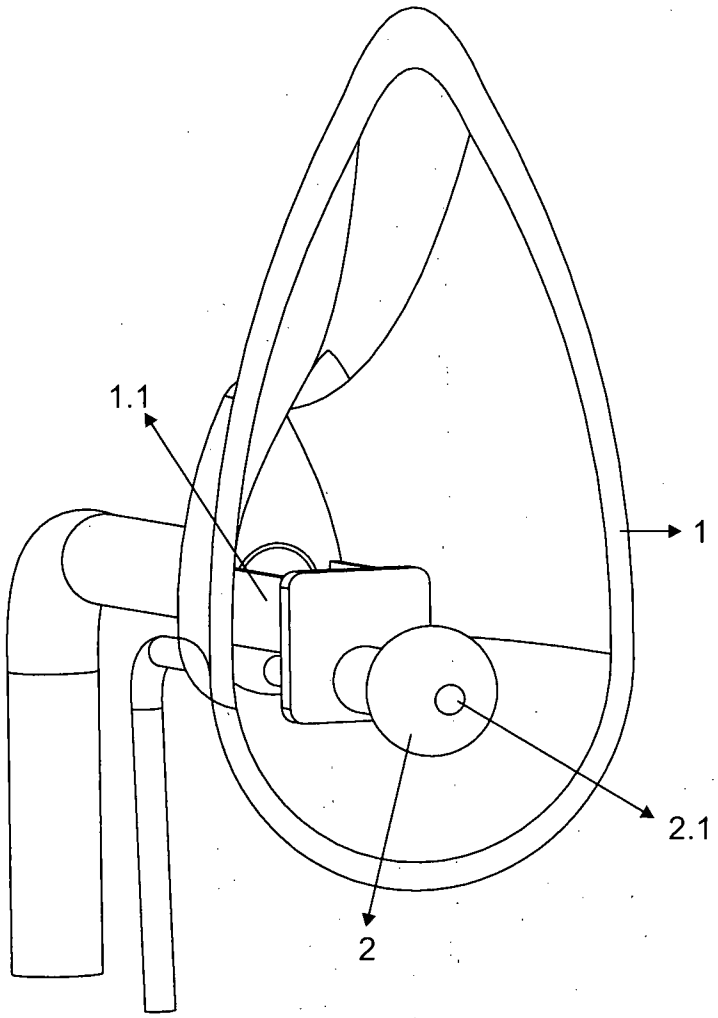

FIGURE 2

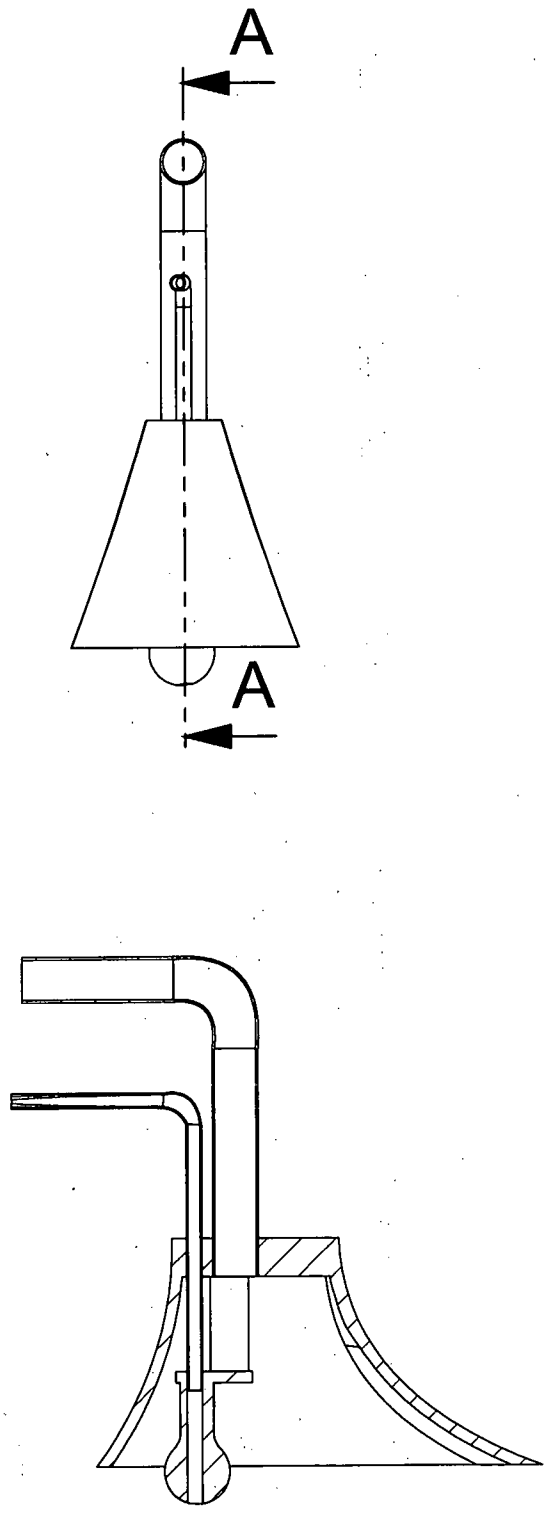

FIGURE 3

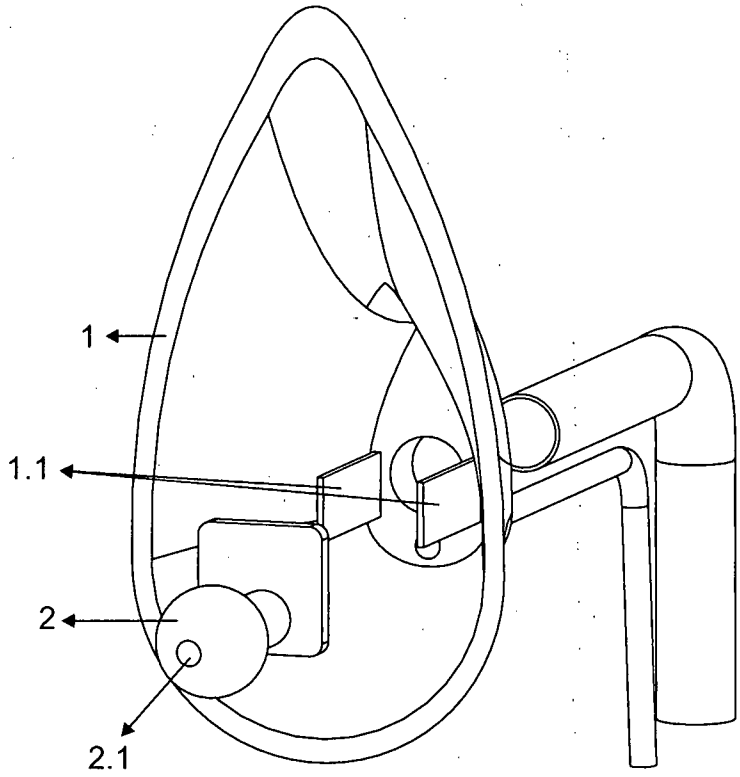

FIGURE 4

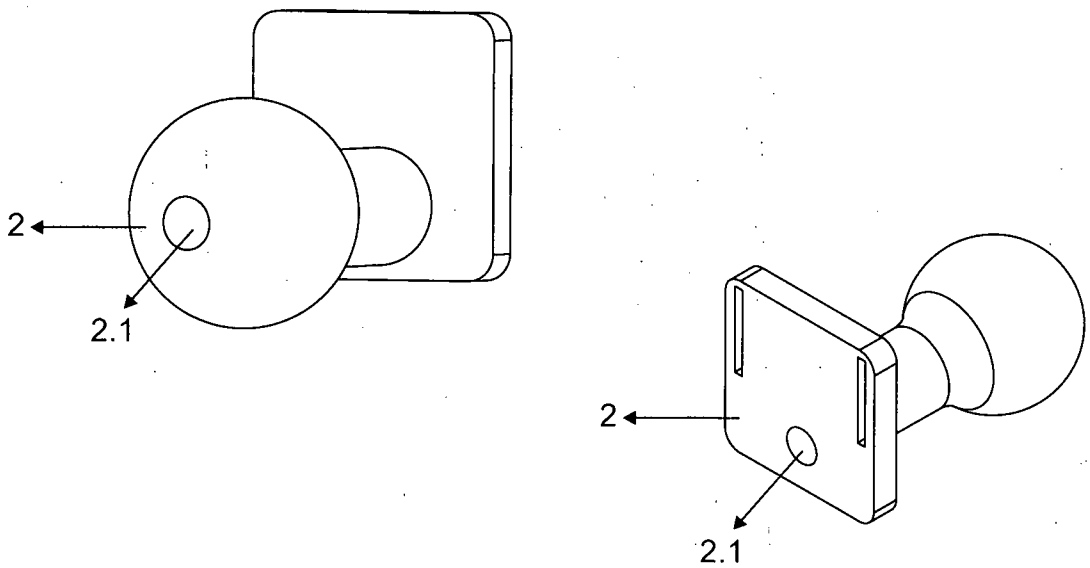

FIGURE 5

INTERNATIONAL SEARCH REPORT

International application No
PCT/TR2014/000039

A. CLASSIFICATION OF SUBJECT MATTER
INV. A61M16/06 A61M16/01
ADD.

According to International Patent Classification (IPC) or to both national classification and IPC

B. FIELDS SEARCHED

Minimum documentation searched (classification system followed by classification symbols)
A61M A61J

Documentation searched other than minimum documentation to the extent that such documents are included in the fields searched

Electronic data base consulted during the international search (name of data base and, where practicable, search terms used)
EPO-Internal, WPI Data

C. DOCUMENTS CONSIDERED TO BE RELEVANT

Category*	Citation of document, with indication, where appropriate, of the relevant passages	Relevant to claim No.
X	WO 2011/125061 A2 (KAST SILICONE LTD [IL]; SHAHAF DANIEL [IL]) 13 October 2011 (2011-10-13) abstract; figures 4,5 page 34, lines 19-33 page 36, lines 8-9	1-3
X	US 2002/129816 A1 (WILLIAMS KAYODE A [US] ET AL) 19 September 2002 (2002-09-19)	1
A	abstract; figure 7 paragraphs [0031], [0035], [0037], [0039]	2,3
A	US 6 626 168 B1 (CARROLL COREY H [US] ET AL) 30 September 2003 (2003-09-30) the whole document	1-3

-/--

[X] Further documents are listed in the continuation of Box C.

[X] See patent family annex.

* Special categories of cited documents :

"A" document defining the general state of the art which is not considered to be of particular relevance

"E" earlier application or patent but published on or after the international filing date

"L" document which may throw doubts on priority claim(s) or which is cited to establish the publication date of another citation or other special reason (as specified)

"O" document referring to an oral disclosure, use, exhibition or other means

"P" document published prior to the international filing date but later than the priority date claimed

"T" later document published after the international filing date or priority date and not in conflict with the application but cited to understand the principle or theory underlying the invention

"X" document of particular relevance; the claimed invention cannot be considered novel or cannot be considered to involve an inventive step when the document is taken alone

"Y" document of particular relevance; the claimed invention cannot be considered to involve an inventive step when the document is combined with one or more other such documents, such combination being obvious to a person skilled in the art

"&" document member of the same patent family

Date of the actual completion of the international search	Date of mailing of the international search report
18 July 2014	28/07/2014

Name and mailing address of the ISA/	Authorized officer
European Patent Office, P.B. 5818 Patentlaan 2 NL - 2280 HV Rijswijk Tel. (+31-70) 340-2040, Fax: (+31-70) 340-3016	Moraru, Liviu

2

Form PCT/ISA/210 (second sheet) (April 2005)

INTERNATIONAL SEARCH REPORT

International application No
PCT/TR2014/000039

C(Continuation). DOCUMENTS CONSIDERED TO BE RELEVANT

Category*	Citation of document, with indication, where appropriate, of the relevant passages	Relevant to claim No.
A	US 5 462 050 A (DAHLSTRAND MONIKA [SE]) 31 October 1995 (1995-10-31) the whole document	1-3
A	US 5 904 140 A (MCGOOGAN ELIZABETH M [US]) 18 May 1999 (1999-05-18) the whole document	1-3
A	GB 2 277 688 A (STEWART DAVID [GB]) 9 November 1994 (1994-11-09) the whole document	1-3
A	US 2010/147298 A1 (LOESCHER THOMAS C [US] ET AL) 17 June 2010 (2010-06-17) the whole document	1-3
A	US 2005/263157 A1 (OLSEN THOMAS [US]) 1 December 2005 (2005-12-01) the whole document	1-3
A	BR PI1 105 046 A2 (APARECIDO DE AGUIAR HENRIQUE JR [BR]) 25 September 2012 (2012-09-25) the whole document	1-3

2

INTERNATIONAL SEARCH REPORT

Information on patent family members

International application No
PCT/TR2014/000039

Patent document cited in search report	Publication date	Patent family member(s)	Publication date
WO 2011125061 A2	13-10-2011	EP 2555822 A2	13-02-2013
		US 2013118485 A1	16-05-2013
		WO 2011125061 A2	13-10-2011
US 2002129816 A1	19-09-2002	NONE	
US 6626168 B1	30-09-2003	NONE	
US 5462050 A	31-10-1995	AT 136799 T	15-05-1996
		DE 69210025 D1	23-05-1996
		DE 69210025 T2	28-11-1996
		DK 0595908 T3	13-05-1996
		EP 0595908 A1	11-05-1994
		ES 2086129 T3	16-06-1996
		JP 3299268 B2	08-07-2002
		JP H06510444 A	24-11-1994
		SE 9102205 A	20-01-1993
		US 5462050 A	31-10-1995
		WO 9301854 A1	04-02-1993
US 5904140 A	18-05-1999	NONE	
GB 2277688 A	09-11-1994	NONE	
US 2010147298 A1	17-06-2010	NONE	
US 2005263157 A1	01-12-2005	NONE	
BR PI1105046 A2	25-09-2012	NONE	