Sept. 11, 1928. 1,683,912

C. C. NEBLETT

PIPE CUTTER

Filed Feb. 19, 1927

Fig. 1.

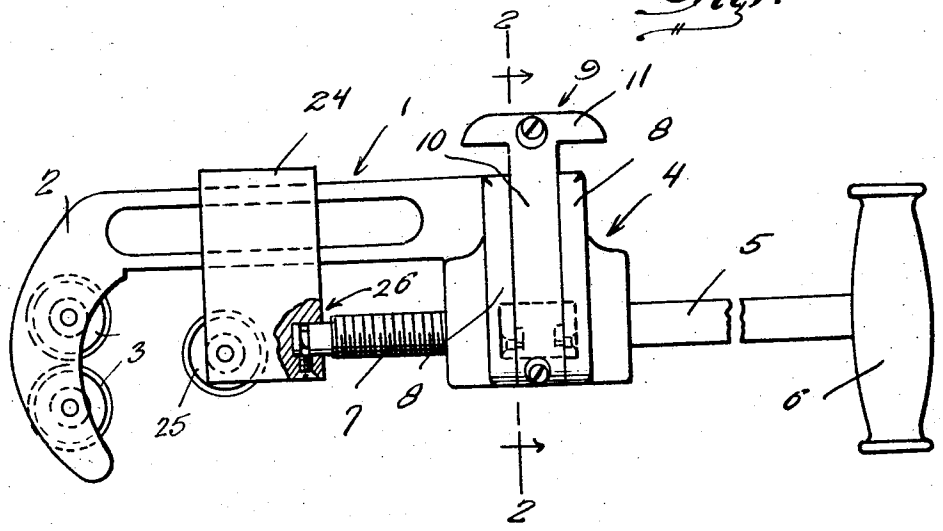

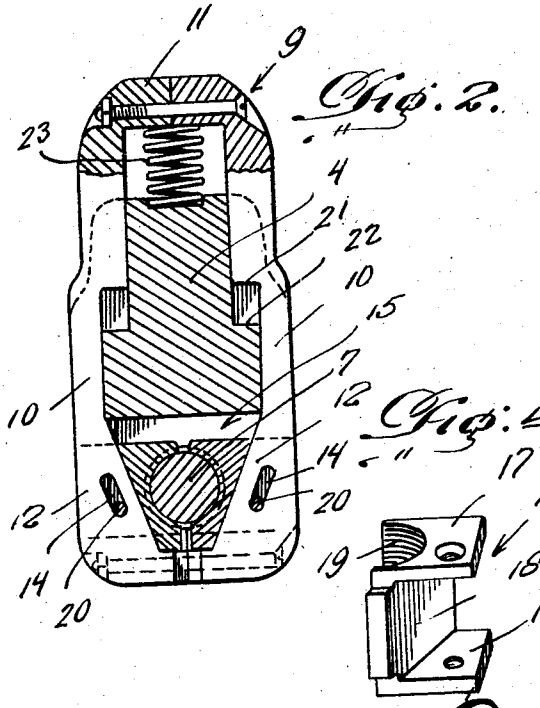

Fig. 2.

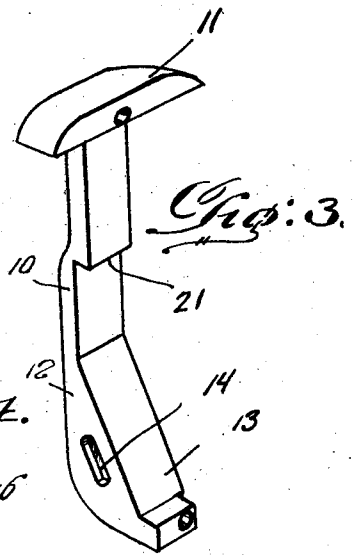

Fig. 3.

Fig. 4.

Inventor
C. C. Neblett.

By Clarence A. O'Brien

Attorney

Patented Sept. 11, 1928. 1,683,912

UNITED STATES PATENT OFFICE.

CHARLIE CARY NEBLETT, OF NORFOLK, VIRGINIA.

PIPE CUTTER.

Application filed February 19, 1927. Serial No. 169,489.

This invention relates to an improved tool, commonly referred to as a pipe cutter, and it has more specific reference to one which has been constructed with a view toward facilitating adjustment of the cutters to readily adapt them for cutting pipes of various diameters.

An object of the invention is to generally improve upon tools of this class by providing one of comparative simplicity and durability, wherein novel parts are employed and the parts so associated that a practical, sturdy, and readily manipulated tool is provided.

Briefly, the invention has reference to a body including a shank having a right angularly extending jaw at its outer end, this jaw being equipped with cutting disks. At the opposite end of the shank is an especially constructed part serving as a carrier as for a slidably mounted frame. This frame is normally held in a predetermined position by a spring, and it is constructed to cooperate with a pair of slidable thread grips. The threaded portion of a rotary handle extends between these grips and is swivelly connected to a slide which carries a complemental disk for cooperation with the first named disk.

The specific details of the invention will become apparent from the following description and drawing:

In the accompanying drawing forming a part of this application, and in which like numerals are employed, to designate like parts throughout the same:

Figure 1 is a side view of a tool constructed in accordance with this invention with a portion broken away and shown in section, to show the details more plainly,

Fig. 2 is an enlarged cross section taken approximately upon the plane of the line 2—2, looking in the direction of the arrow,

Fig. 3 is a perspective view of one of the details of the sliding frame,

Fig. 4 is a detail perspective view of one of the thread grips.

Referring to the drawing in detail, the reference character 1 designates a shank at the outer end of which is a curved right angularly extending jaw 2 equipped with suitable cutting disks 3. At the opposite end of the shank is an enlargement, which may be generally designated as a head 4. It will be noted that this enlargement is constructed to accommodate a slidable and rotatable handle 5 having a cross head 6 at its outer end and having its inner end portion screw threaded as at 7. In addition, this head 4 is formed with spaced outstanding guide flanges 8. Cooperative with these guide flanges is a sliding frame 9. The construction of this frame is more plainly represented in Figs. 2 and 3.

Referring now to Figs. 2 and 3, it will be seen that the frame is composed of duplicate sections 10, these being provided at their upper ends with portions 11 which are bolted together to form a hand-piece of the configuration shown in Fig. 1. The lower ends of the sections 10 are also bolted together and it will be noted from Figs. 2 and 3 that the sections are increased somewhat in thickness as indicated at 12, are provided with inclined surfaces 13 and with cam slots 14. It is obvious that the threaded handle 7 extends between these beveled surfaces 13. In addition, a gripping device indicated generally at 15 is interposed between the bevels and the handle. This gripping device is composed of two grips 16 of the construction shown in Fig. 4.

Each grip 16 has outstanding flanges 17 which straddle the portions 12 of the sections 10. It follows that the portion of the grip between the flanges is inclined as at 18 for cooperation with the complemental bevel 13. Moreover, the grips are provided with semi-circular grooves which are screw threaded as at 19. When the two grips are in a predetermined relation, they cooperate with the threaded portion of the handle, so that positive feed is had.

The grips, however, may be disengaged from the threads and this is done by extending pins 20 through the flanges 17 and then through the cam slots 14. It is yet to be pointed out that the movement of the frame 9 is limited by cooperating shoulders 21 on the frame and complemental shoulders 22 on the aforesaid head 4 (see Fig. 2). Another detail yet to be mentioned, is the coiled spring 23 located between the presser bar 11 of the frame and the top portion of the head 4.

Referring again to Fig. 1, it will be seen a suitable slide 24 is mounted upon the aforesaid shank 1 and this carries a cutting disk 25. Then the threaded part of the handle 7 is swivelly connected as at 26 with its slide.

Under ordinary circumstances, the coiled spring 23 presses the sliding frame 9 preferably to the position indicated in Fig. 2. In so doing, the pin and slot connection releases a cam action which maintains the two thread grips 16 in firm engagement with the thread 7 of the handle 5. Thus, a positive feed block is provided, and by turning the hand grip 6 in the usual way, the slide 24 may be moved back or forth to adjust the cooperating cutting disks 3 and 25.

The feature of the construction is to allow a quick adjustment to be made. To do this, it is only necessary to place the palm of the hand against the presser bar 11 and to thrust the frame 9 down against the action of the coiled spring 23. In so doing, the thread grips 16 are spread apart a distance to be sufficiently allowed free sliding of the handle 5. As soon as the sliding frame is released, the spring moves the frame back up and renders the block effective to resume its action in bringing about the usual threaded movement of the handle.

It is believed that by considering the description in connection with the drawings, persons familiar with tools of this class will be able to obtain a clear understanding of the same. Therefore a more lengthy description is thought unnecessary.

While the preferred embodiment of the invention has been shown and described, it is understood that minor changes coming within the field of invention claimed may be resorted to if desired. Moreover, it is to be stated that while the invention has been restricted more particularly to use and association with a pipe cutting tool, it is not to be limited to this purpose and use, for it is equally well adapted for use and association with safety jacks, wrenches, and other parts of machinery requiring quick adjustment.

Having thus described my invention, what I claim as new is:—

1. In a tool of the class described, a shank having a jaw at one end provided with cutting means and having a head at its opposite end, said head being formed with a passage disposed in parallelism with said shank, a handle passing through said passage, a slide mounted on said shank, a cutter carried by said slide and cooperative with the first named cutting means, said handle being swivelly connected with said slide, a frame slidably mounted upon said head, a pair of complemental relatively movable grips associated with the head and passage and engageable with said shank, and an operating connection between the frame and the grips, whereby to release the grips to facilitate adjustment of said slides.

2. In a tool of the class described, a shank having a jaw at one end provided with cutting means and having a grooved head at its opposite end, said head being formed with a passage disposed in parallelism to said shank, a handle passing slidably and rotatably through said passage, a slide mounted on said shank, a cutter carried by the slide and cooperative with the first named cutting means, said handle being swivelly connected with said slide, a frame slidably mounted in the grooves on said head, and a cam coacting means affording operating connections between the shank and said frame.

3. In a structure of the class described, a shank having pipe engaging means at one end and a grooved head at the opposite end, a slide mounted on the shank and cooperable with said means, a handle including a threaded portion swivelly connected with said slide, said head having an opening through which the threaded portion is operable, a pair of grips mounted in said head and cooperable with threads on said handle, a spring pressed frame embracing the head and slidable in the grooves on said head, and pin and slot connections between the frame and said grips.

4. In a structure of the class described, a shank having pipe engaging means at one end and a grooved head at the opposite end, a slide mounted on the shank and cooperable with said means, a handle including a threaded portion swivelly connected with said slide, said head having an opening through which the threaded portion is operable, a pair of grips mounted in said head and cooperable with threads on said handle, a spring pressed frame embracing the head and slidable in the grooves on said head, pin and slot connections between the frame and said grips, a spring interposed between the frame and said head, and cooperating shoulders on the head and frame for limiting the sliding movement of the frame in one direction.

In testimony whereof I affix my signature.

CHARLIE CARY NEBLETT.