Feb. 17, 1931. W. S. RICE ET AL 1,792,551

METAL SPRAYING APPARATUS

Filed Nov. 4, 1929

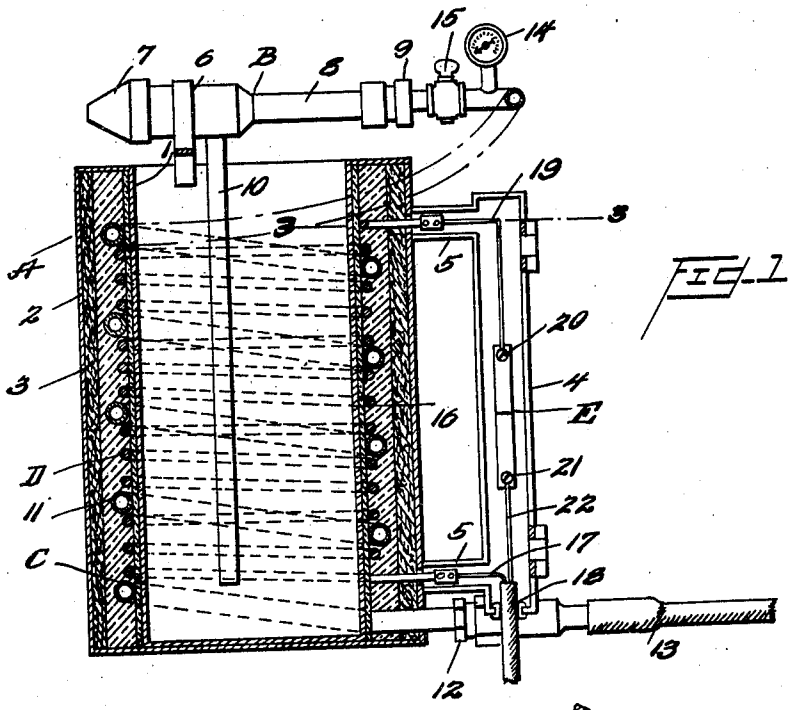

FIG. 1.

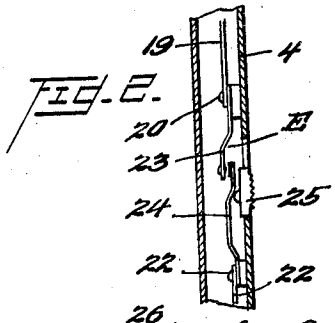

FIG. 2.

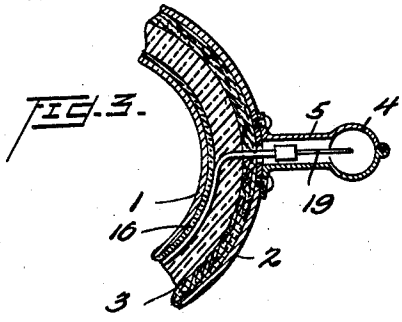

FIG. 3.

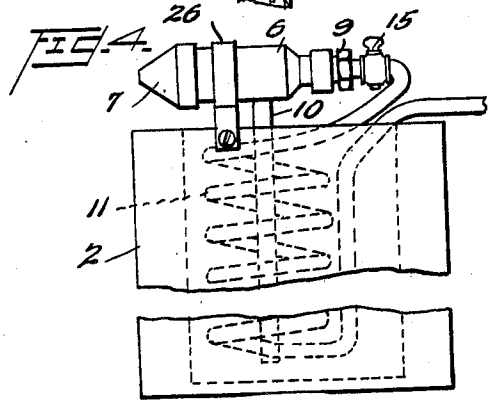

FIG. 4.

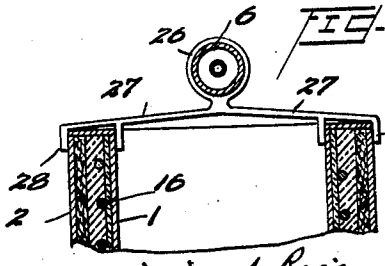

FIG. 5.

Inventor

William S. Rice

By Charles M. Saeger

Geo. S. McMullen

Attorney

Patented Feb. 17, 1931 1,792,551

UNITED STATES PATENT OFFICE

WILLIAM S. RICE, OF CHICAGO, ILLINOIS, AND CHARLES MARSHAL SAEGER, JR., OF WASHINGTON, DISTRICT OF COLUMBIA

METAL-SPRAYING APPARATUS

Application filed November 4, 1929. Serial No. 404,850.

(GRANTED UNDER THE ACT OF MARCH 3, 1883, AS AMENDED APRIL 30, 1928; 370 O. G. 757)

This invention described herein may be manufactured and used by or for the government for governmental purposes, without the payment to us of any royalty thereon.

This invention broadly speaking, relates to apparatus for spraying metal. More particularly it is directed to a spraying device designed to meet the requirements of the method set forth in pending application Serial No. 281,278, filed May 28, 1928, entitled "Method for the production of dentures".

One object of this invention is to provide a portable apparatus for spraying metals having facilities for reducing metal to a molten state and subjecting it to the action of air under pressure for the purpose of atomizing and directing the particles of atomization at high forward velocity onto the surface to be coated.

Another object of this invention is to provide an apparatus of the character designated wherein the air blast utilized for dividing the molten metal to minute particles is heated to a temperature approximating that of the molten metal to prevent oxidation and insure complete disintegration of the metal by the air blast.

Another object of this invention is to provide an apparatus for spraying metal in which the coil traversed by the air and the electrical heating element employed to reduce the metal to a molten state are associated so that the heating element not only functions to reduce the metal to a molten state but also serves as a heating means for the air coil.

Another object of this invention is to effect a metal spraying apparatus which may be readily manipulated by the operator, conveniently transported and which is simple in construction and comparatively inexpensive to produce.

With these and other objects in view this invention consists in certain novel details of construction, combination and arrangement of parts to be more particularly hereinafter described and claimed.

Briefly stated, this invention comprises a body portion in the nature of a cylindrical heat insulated container adapted to receive the metal to be reduced to a molten state, an atomizing device including a horizontally disposed atomizing nozzle supported immediately above the container and a tube extending from the nozzle into said container, an air coil encircling the container one end of the coil communicating with the atomizing nozzle, the opposite end with a source of air under pressure and a suitably energized electrical heating element encircling the container, the turns of the heating element being interposed between those of the air coil.

Referring more particularly to the accompanying drawings in which corresponding parts are indicated by similar reference characters:

Fig. 1 is a transverse vertical section partly in elevation of the entire apparatus and showing but a portion of the air supply tube.

Fig. 2 is a fragmentary sectionized detail illustrating the switch construction controlling energization of the electrical heating element.

Fig. 3 is a fragmentary sectionized detail taken on the line 3—3 of Fig. 1

Fig. 4 is a fragmentary elevation with certain parts shown in dotted outline and illustrating a modified form of construction and

Fig. 5 is a fragmentary sectionized detail of the modification shown in Fig. 4.

Practice of the process disclosed in the hereinabove identified application involves among other steps coating certain articles with metal preliminary to producing the finished denture, and to accomplish this, various metal spraying apparatus were resorted to but were found inadequate, being either too heavy, non-portable or difficult to manipulate. It is therefore the aim and purpose of this invention to overcome these deficiencies by providing an apparatus which is light, easy to handle, and capable of producing a readily controlled metal spray of the character required in the method referred to.

To facilitate further discussion of this invention it will be hereinafter considered in the order to wit: Namely the body portion of the apparatus, atomizer construction, means for effecting atomization, electrical

heating element and its connections, operation, modification and conclusion.

Reference being had to Fig. 1 of the drawings it will be seen the body portion A comprises an elongated cylindrical vessel or chamber (1), the latter being open at its upper and closed at its lower end concentrically positioned in a similarly formed casing (2), which is of the same height as vessel (1) but of greater diameter to provide an annular space for the reception of suitable insulating material (3).

The body portion A is manipulated by means of a hollow hand grip (4) which is spaced from and connected to the casing (2) by hollow extensions (5). Both the vessel (1) and casing (2) may be provided with a heat insulating material.

Coming now to the atomizer B this device comprises a head (6), an adjustable nozzle (7), to vary the character of the spray and an extension (8), said extension being formed at its outer end to receive a connection (9) to be hereinafter referred to.

Extending downwardly from head (6) into the vessel (1) is a tube (10), the lower end of which terminates adjacent the bottom of the vessel as clearly shown in Fig. 1 of the drawings. With this arrangement it is evident as air under pressure passes through the head (6) of the atomizer the molten content of the vessel (1) will be drawn up through tube (10) disintegrated and projected from the nozzle (7) in minute particles.

The means for effecting atomization (indicated generally by the reference characters C) embodies a coil (11) arranged in encircling relation with respect to vessel (1), the turns of the coil starting at the bottom of the vessel and terminating near the top thereof as clearly shown in Fig. 1 of the drawings. The lower end of air coil (11) communicates with a nipple (12) extending through casing (2) near its bottom. The outer end of said nipple (12) is connected to a flexible tube (13) leading to a source of air under pressure, (not shown). The upper end of air coil (11) is attached to the outer end of connection (9) thus interconnecting the atomizer B with the source of air under pressure through the coil. To control the air supply and likewise indicate pressure, connection (9) of nozzle B may be equipped with a pressure gauge (14) and a cut-off valve (15).

Reduction of the metal in vessel (1) to a molten state is accomplished by means of an electrical heating element D connected by suitable conductors with a source of electrical energy. The electrical heating element D comprises coil (16) which encircles vessel (1) for the greater portion of its length, the turns of said element being disposed intermediate those of the air coil as clearly shown in Fig. 1 of the drawings.

By arranging the heating element in this manner it serves not only to reduce the metal in vessel (1) to a molten state, but also to heat the turns of the air coil so that as the air enters the atomizing nozzle its temperature will correspond substantially to that of the molten metal.

One terminal of the heating coil (11) is connected to a conductor (17) extending through hollow extensions (5) of hand grip (4) and outlet (18) positioned in the lower end of said grip. The other terminal of the heating coil (11) is connected to conductor (19) extending to one terminal (20) of switch E, the remaining terminal (21) of said switch being connected to conductor (22), which passes through the outlet (18) to the exterior of the handle.

Although switch E may be of any suitable construction in the present embodiment it consists of a pair of resilient contacts (23) and (24) adapted to be brought into engagement by means of a button (25) slidably mounted on hand grip (4). Locating the switch E on the hand grip (4) enables the circuit of the heating element to be readily controlled during manipulation of the sprayer as will be readily understood without further discussion.

Having defined the structural details of this invention its operation is as follows: The metal to be sprayed is placed in the vessel or chamber (1) and switch E is closed to complete the circuit through the heating element (11). When the metal has been reduced to a molten state the operator opens valve (15) whereupon the air under pressure enters the lower end of air coil (11), passes through its several turns and issues from the nozzle of the atomizer at high velocity. In traversing the turns of the heating element the air is subjected to the heating action of the molten metal and also to that of the heating coil (16) in consequence of which as the air enters the atomizer B, its temperature approximates that of the molten metal, and as a result of this feature the metal is atomized and solidified before oxidation can occur. Passing through the nozzle over the open end of tube (10), the air draws the molten metal up through the tube, disintegrates it and projects the disintegration through the nozzle (7), to quickly metallize any object exposed to the spray.

Instead of encircling the vessel (1) with the coil and heating element as shown in Fig. 1, the coil may be positioned within said vessel (1) and the latter encircled by the heating element as shown in Figs. 4 and 5 of the drawings. In this construction the tube (10) extending through atomizer B projects through the center of the air coil to a point contiguous the bottom of the vessel as shown in Fig. 4.

In both forms of the invention it is to be noted atomizer B is supported immediately

above the open end of vessel (1) by means of a bracket F embodying a loop portion (26) which embraces head (6) and oppositely extending legs (27), the extremities of which are formed with laterally spaced downwardly projecting lugs (28) adapted to engage the upper edge or body portion A as clearly shown in Fig. 5 of the drawings.

In conclusion it is to be understood that although in the foregoing certain elements have been described as best adapted to perform the functions allotted them, nevertheless it is to be understood that various minor changes may be resorted to within the scope of the appended claims without departing from or sacrificing any of the principles of the invention.

Having described our invention, what we claim as new and wish to secure by Letters Patent is:

1. An apparatus for coating surfaces with hot molten substances comprising a heating chamber adapted to receive the substance to be reduced to a molten state, an atomizing nozzle disposed above the chamber, an induction tube communicating with the interior of the nozzle and extending into the chamber, an air supply under pressure, a tube connecting said air supply with the atomizing nozzle, said tube for the greater portion of its length encircling the heating chamber, an electrical heating coil surrounding the said chamber, the turns of the heating coil being situated between those of the air coil to heat the contents of the heating chamber and also the air as it passes through the tube to the atomizing nozzle, and energizing means in connection with the said electrical heating coil.

2. An apparatus for coating surfaces with hot molten substances comprising a heating chamber adapted to receive the substance to be reduced to a molten state, an atomizing nozzle, a bracket spanning the upper end of the heating chamber and horizontally supporting the atomizing nozzle above said chamber, an induction tube communicating with the interior of the nozzle and extending into the heating chamber, an air supply under pressure, a tube connecting the air supply with the atomizing nozzle, said tube for the greater portion of its length encircling the heating chamber, an electrical heating coil surrounding the said chamber, the turns of the heating coil being situated between those of the air coil to heat the contents of the heating chamber and also the air as it passes through the tube to the atomizing nozzle, and energizing means in connection with the said electrical heating coil.

3. An apparatus for coating surfaces with hot molten substances comprising a heating chamber adapted to receive the substance to be reduced to a molten state, a casing embracing the heating chamber and in spaced relation with respect thereto to form an annular insulation space, insulating material within said space, a bracket extending across the upper extremities of the heating chamber and casing, an atomizing nozzle horizontally supported by the bracket above the upper end of said heating chamber, an induction tube communicating with the interior of the nozzle and extending into the heating chamber to a position adjacent its lower end, an air supply under pressure, a tube connecting the air supply with the atomizing nozzle, said tube at the greater portion of its length encircling the cylindrical heating chamber, a heating coil surrounding the heating chamber, the turns of the heating coil being disposed between those of the air coil to heat the contents of said chamber, and the air as it traverses the coil to the atomizing nozzle and means for energizing said electrical heating coil.

WILLIAM S. RICE.
CHARLES M. SAEGER, JR.