Nov. 15, 1938. A. C. EVERETT 2,136,421

CONTAINER FILLING MACHINE

Filed Nov. 15, 1933 4 Sheets-Sheet 1

Fig. 1

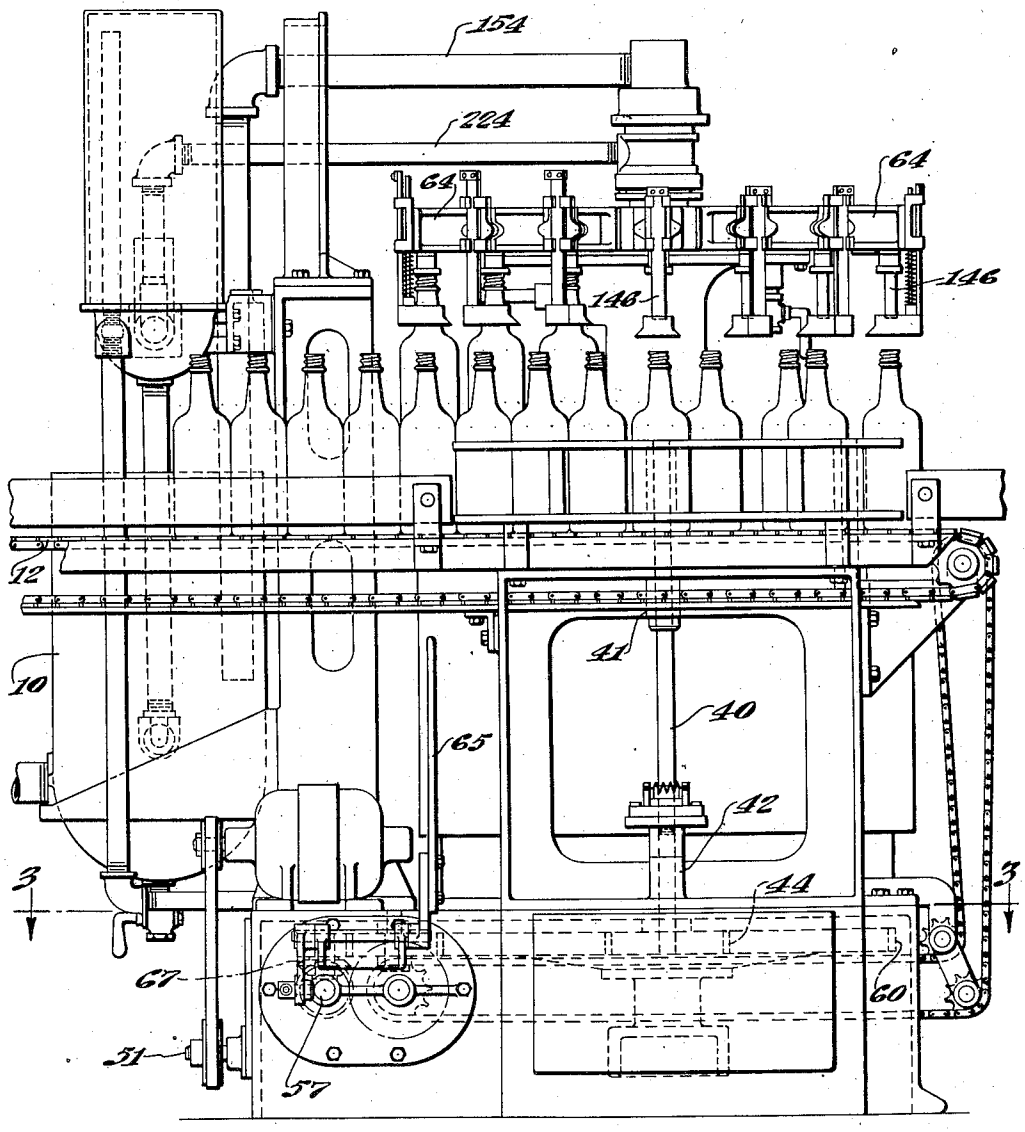

INVENTOR
Arthur Clarence Everett
BY J. Stanley Churchill
ATTORNEY

Nov. 15, 1938. A. C. EVERETT 2,136,421

CONTAINER FILLING MACHINE

Filed Nov. 15, 1933 4 Sheets-Sheet 2

Fig. 2

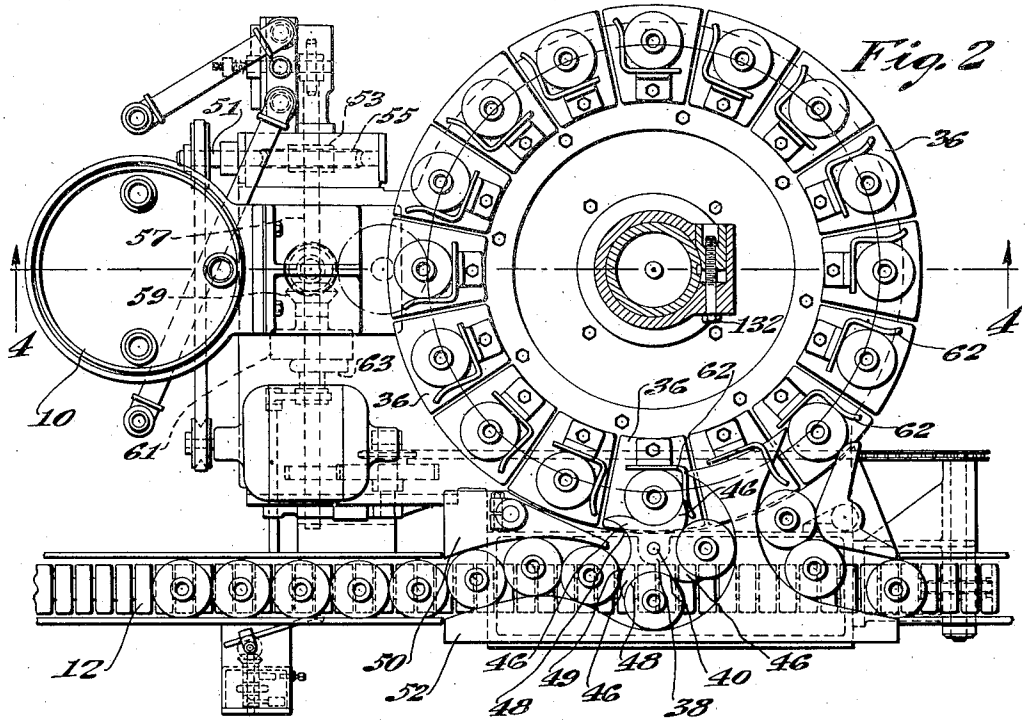

Fig. 3

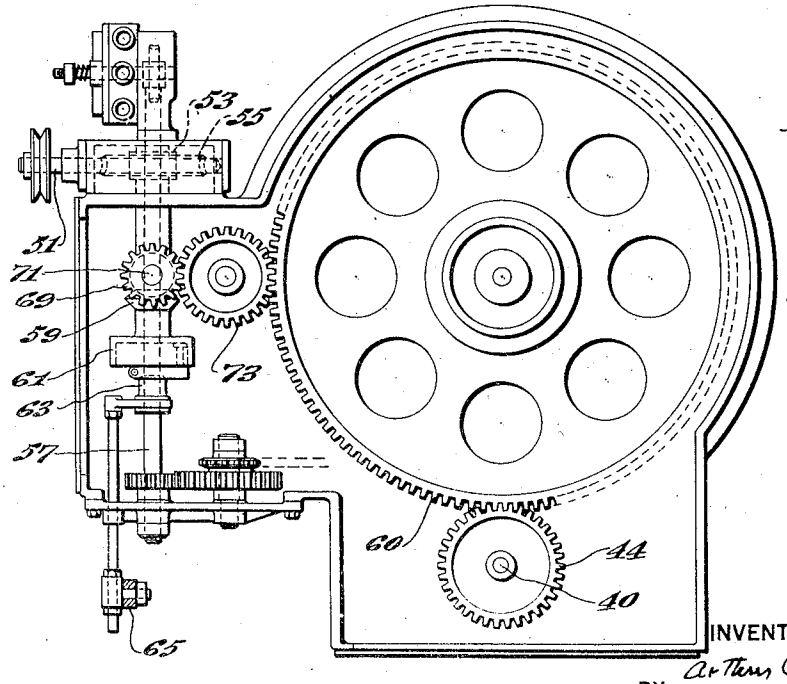

INVENTOR
Arthur Clarence Everett
BY J. Stanley Churchill
ATTORNEY

Nov. 15, 1938. A. C. EVERETT 2,136,421

CONTAINER FILLING MACHINE

Filed Nov. 15, 1933 4 Sheets-Sheet 3

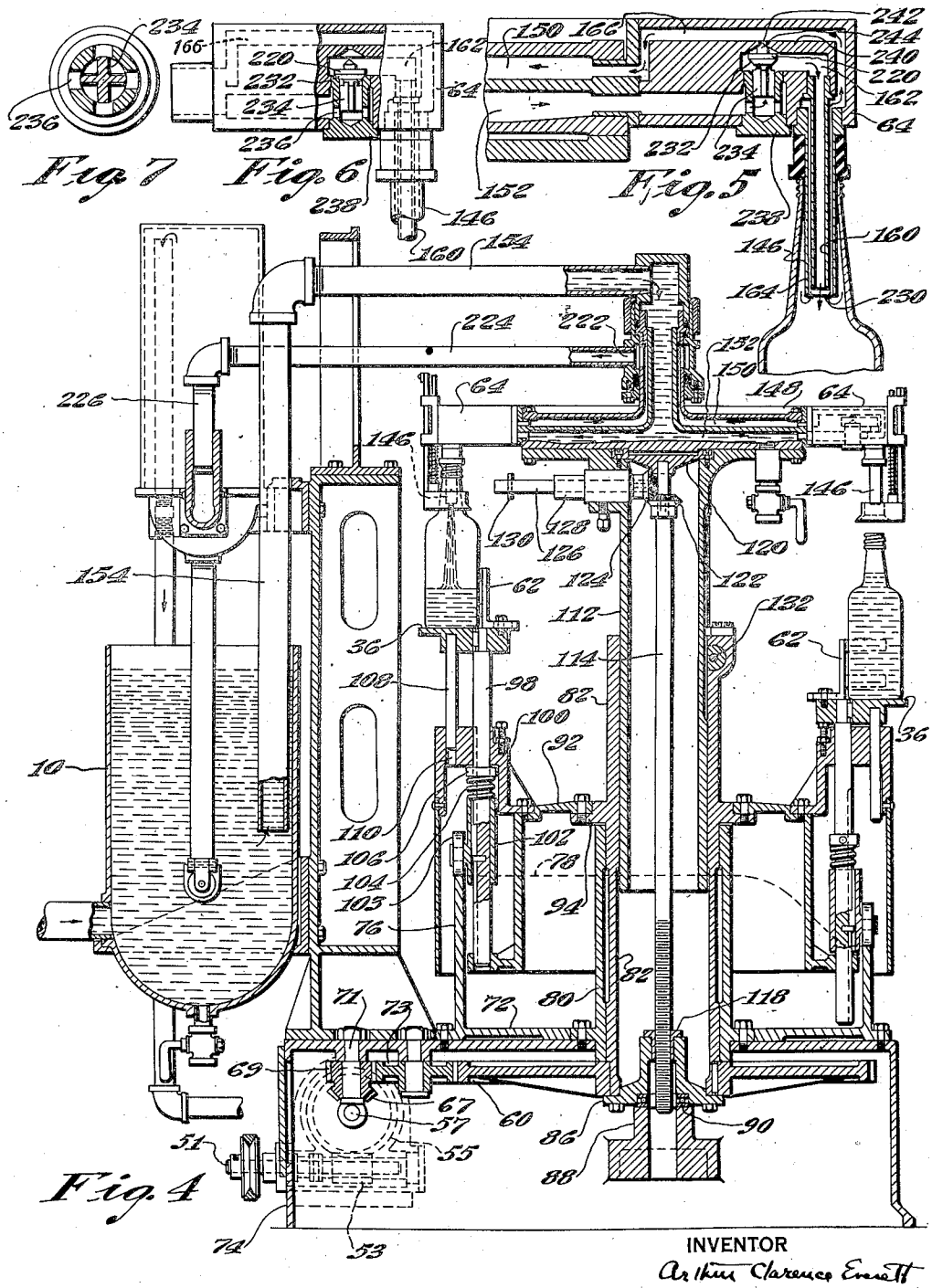

INVENTOR
Arthur Clarence Everett
BY J. Stanley Churchill
ATTORNEY

Nov. 15, 1938. A. C. EVERETT 2,136,421

CONTAINER FILLING MACHINE

Filed Nov. 15, 1933 4 Sheets-Sheet 4

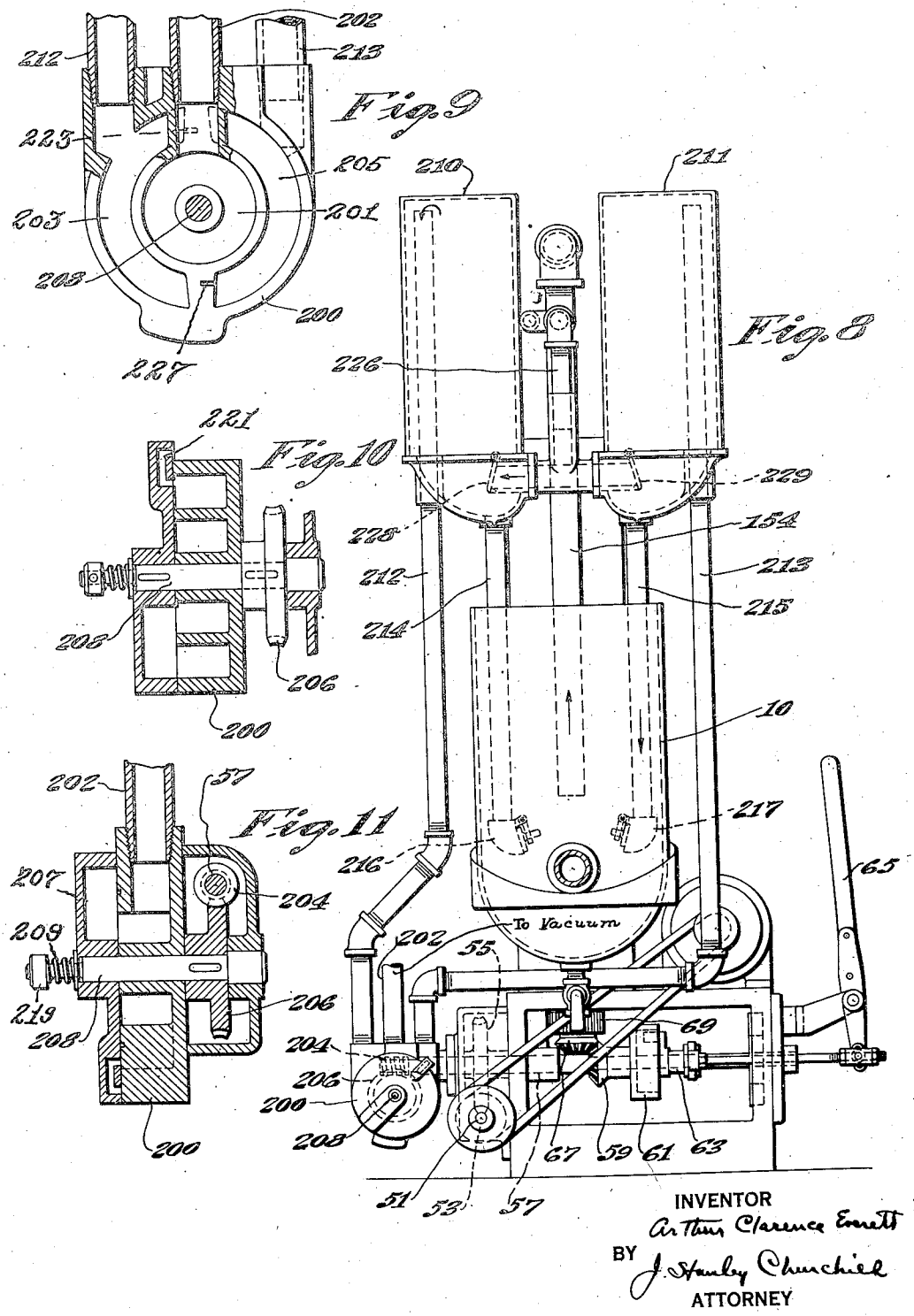

Fig. 9

Fig. 8

Fig. 10

Fig. 11

INVENTOR
Arthur Clarence Everett
BY J. Stanley Churchill
ATTORNEY

Patented Nov. 15, 1938 2,136,421

UNITED STATES PATENT OFFICE

2,136,421

CONTAINER FILLING MACHINE

Arthur Clarence Everett, Boston, Mass., assignor to Pneumatic Scale Corporation, Limited, Quincy, Mass., a corporation of Massachusetts

Application November 15, 1933, Serial No. 698,090

6 Claims. (Cl. 226—116)

This invention relates to a container filling machine, and particularly to a rotary container filling machine.

One object of the invention is to provide a novel and improved container filling machine by which the containers may be filled in a rapid, economical, and highly efficient manner.

A further and more specific object of the invention is to provide a novel container filling machine in which provision is made for preventing dripping of the liquid from the filling nozzles.

A still further object of the invention is to provide a novel and improved container filling machine operating upon the vacuum principle and in which provision is made for preventing dripping of the liquid from the filling nozzles.

With these objects in view and such others as may hereinafter appear, the invention consists in the filling machine and in the various structures, arrangements and combinations of parts hereinafter described and particularly defined in the claims at the end of this specification.

In the drawings illustrating the preferred embodiment of the invention, Fig. 1 is a front elevation of a rotary filling machine embodying the invention; Fig. 2 is a plan of the machine shown in Fig. 1; Fig. 3 is a cross-section taken on the line 3—3 of Fig. 1; Fig. 4 is a view in vertical section taken on the line 4—4 of Fig. 2; Fig. 5 is a sectional detail of one of the filling nozzles and associated parts; Fig. 6 is an elevation partly in section illustrating the control valve in a different position of operation; Fig. 7 is a cross-sectional view of the control valve; Fig. 8 is an end view of a portion of the machine shown in Fig. 1 viewed from the left; and Figs. 9, 10 and 11 are sectional details of an air control valve, to be referred to, forming a part of the present machine.

In the illustrated machine the different features of the invention are shown as embodied in a rotary bottle filling machine wherein a source of supply of the liquid with which the bottles are to be filled is contained within a supply tank 10, and provision is made for filling the bottles by a plurality of bottle filling mechanisms during continuous movement of the bottle filling mechanisms and the bottles as they are supported upon a continuously rotating bottle supporting spider, the filling operation being effected by the evacuation of the bottle in accordance with the well known vacuum principle.

As herein shown, the empty bottles are transferred from the incoming conveyor 12 to the platform 36 of the rotary filling device by a continuously rotating spider 38 which is mounted on a shaft 40. The lower end of this shaft is rotatably mounted in bearings 41, 42 formed in the machine frame and is driven by a gear 44 which is fast thereon. The transfer spider 38 is provided with a series of teeth 46, the inside portions 48 being formed to fit the shape of the bottle, while the back portions 49 are made of such curved shape that the successive bottles are caused to move with an accelerating motion in the direction of travel of the spider teeth. Guide members 50, 52 serve to guide the bottles on the conveyor 12 so that as they are delivered to the spider teeth 46 the movement of the bottle is not stopped entirely and, consequently, the bottle does not have to be picked up by the front of the teeth 48 from a dead stop. The teeth of the spider are so formed that the diameter of the center line of travel of the bottles around the spider is less than the pitch diameter of the spider driving gear 44. This gives less lineal speed to the bottle than the lineal speed which it would have if the diameter was the same as the pitch diameter of the gear 44. The gear 44 meshes with and is driven by a gear 60 which forms the driving gear for the rotary bottle filling device.

During the rotary movement of the bottle supporting spider or platform 36, the bottles are engaged by carriers 62 mounted on the platform 36 and positioned in alignment with filling heads 64. The diameter of a circle passing through the center of the bottles carried on the filling machine is greater than the pitch diameter of the gear 60 and, consequently, imparts a slightly higher lineal speed to the bottle than it would have if positioned so that the diameter of a circle through the bottles was the same as the pitch diameter of the gear 60.

It will be observed that while the teeth 46 of the transfer spider 38 operate in timed relation with the carriers 62, the lineal speed of the individual bottles is slightly less than that of the carriers 62 when they are delivered thereto and, consequently, the carriers move slightly faster than the teeth 46 and carry the bottles out of contact with the inside portions of the teeth 48 and allow the points of the teeth 46 to continue their rotation without interfering with an individual bottle which has just been delivered to one of the carriers 62 and, hence, the proper alignment of the bottle is not disturbed and no jamming or breakage occurs.

Provision is made for rotating the rotary carrier upon which the bottles are supported from a

motor belted to a shaft 51 and the latter is provided with a worm 53 cooperating with a worm gear 55 on a shaft 57 mounted in bearings in the base of the machine. The bevel gear 59 formed as a part of a clutch housing 61 is normally arranged free on the shaft 57 until the clutch housing 61 is engaged by the second member 63 of the clutch when a manually operated clutch lever 65 is thrown. In this manner, the bevel gear 59 is driven from the shaft 57 through the clutch and operates to drive a bevel gear 67. The bevel gear 67 is provided with a gear 69 attached thereto which is free to turn on a vertical stud 71 and meshes with an idler gear 73 cooperating with the gear 60 attached to and arranged to drive the rotatable bottle supporting spider in which the carrier members are mounted. The gear 44 for rotating the spider 38 is arranged to mesh with and is driven by the gear 60.

Referring now to Fig. 4, the bottles are filled with the liquid contained in a supply tank 10 by the illustrated mechanism operating upon the vacuum principle and in which provision is made for evacuating the bottles and causing the liquid to be drawn up from the supply tank by the vacuum in the bottle. As illlustrated in Fig. 4, a circular bearing member 72 is fastened to the top of the base 74 and comprises an outer cam ring 76 having a cam surface 78 formed on the top edge thereof, and an inner supporting sleeve 80 which acts as a bearing for a rotating sleeve 82 rotatably mounted therein. The gear 60 is fast to the bottom of the sleeve 82 and causes it to rotate. An end disc 86 which is supported by the column 88 formed in the base 74 is also fastened to the bottom of the sleeve 82 and forms a vertical supporting member for the sleeve. An anti-friction bearing 90 located between the disc 86 and the column 88 facilitates the rotation of the sleeve 82. A cylindrical casing 92 is attached to a circular flange 94 formed on the sleeve 82 and supports a plurality of bottle elevating devices, each comprising a platform 36 mounted on the end of a vertical rod 98 extending through a bearing in the bracket 100 which is attached to the top of the cylindrical casing 92. A roll supporting sleeve 102 free to slide on the rod 98 is provided with a roller 103 rotatably attached thereto which cooperates with the cam surface 78 above described. The sleeve 102 yieldingly raises the platform 36 through the spring 104 which freely encircles the rod 98 and cooperates with the underside of a collar 106 fast on the rod 98. A guide pin 108 fastened to the platform 36 and guided in a hole 110 in the bracket 100 serves to keep the platform 36 in proper alignment.

A sleeve 112 mounted in the sleeve 82 is arranged to be adjusted for varying heights of bottles by means of an adjusting screw 114, the lower end of which is provided with screw threads cooperating with a threaded nut 118 fast in the end disc 86. The upper end of the adjusting screw 114 is mounted in a bearing formed in a bracket 120 and is provided with a bevel gear 122 fast thereon which cooperates with the bevel gear 124 fast on the end of a shaft 126 mounted in a bearing 128 held in the sleeve 112. The shaft 126 is provided with a pin 130 to which a wrench may be applied to turn the shafts 126 and 114 and vertically adjust the sleeve 112. A clamping screw 132 is provided in the top of the sleeve 82 to normally hold the sleeve 112 in position after an adjustment has been made.

A plurality of filling heads 64 are mounted on top of the sleeve 112 to rotate therewith, each of said filling heads being in alignment with its cooperating elevating platform 36 by which an individual bottle is raised into operative engagement with the filling nozzle 146 depending from and carried by the filling head 64. As illustrated in Fig. 4, the filling heads 64 are detachably mounted upon a central rotatable hollow member 148 which is subdivided to form two horizontally disposed cylindrical chambers 150, 152, and one chamber 152 is connected through the piping 154 to the supply tank 10 and through which the liquid is drawn by the vacuum created within the bottle and caused to flow down through the nozzle 146 to fill the same. Provision is made for creating a vacuum or exhausting the air from within the bottles and for insuring the filling of the bottles to uniform level, and, as herein shown, each filling nozzle indicated generally at 146 has mounted thereon an inner tube 160 connected to a liquid chamber 162 in the filling head 64 and comprises the filling nozzle through which liquid is introduced into bottle. The annular passage 164 between the filling nozzle 146 and the inner tube 160 is connected to a suction chamber 166 in the filling head 64 and this suction chamber is directly connected to the second chamber 150 of the central rotatable hollow member above referred to. As illustrated in Fig. 5, the filling heads 64 are arranged to be detachably mounted upon the member 148 and as herein shown, each filling head 64 is provided with a tubular extension which is adapted to closely fit into bored holes in the periphery of the member 148 to form an air and liquid tight connection between the heads 64 and the member 148. In addition, each filling head is provided with a flanged portion which may be secured to the member 148 by screws, not shown, in order to provide a detachable mounting between the filling head and the member 148. Suitable gaskets, not shown, may also be provided between the flange and the member 148.

Referring now to Fig. 8, it will be observed that a valve 200 is connected by a pipe 202 to a vacuum pump, not shown, which may comprise any of the well known types. The valve 200 is adapted to be operated by the worm 204 on the end of a shaft 57 through the worm wheel 206 fast on the valve shaft 208. The valve 200 is connected to vacuum chambers 210, 211 by pipes 212, 213 and the bottoms of said vacuum chambers 210, 211 are provided with drain pipes 214, 215. The drain pipes 214, 215 extend into the supply tank 10 and are provided with check valves 216, 217 which will allow the surplus liquid drawn from the top of the bottles, as will be described, to be discharged into the supply tank when there is no vaccum in the chambers 210, 211. The valve 200 is adapted to be operated to alternately connect the chambers 210, 211 with the vacuum pump and to alternately open them to atmospheric pressure. It will be seen, therefore, that the chambers 210, 211 open to atmospheric pressure will immediately discharge any liquid which has accumulated therein into the supply tank 10.

Referring now to Figs. 9, 10, and 11, the valve 200 is provided with three chambers 201, 203, 205. The chamber 201 is cylindrical in shape and is connected by a port to the pipe 202. The pipe 202 is connected to the usual suction pump (not shown). The chambers 203 and 205 are connected to the pipes 212, 213, respectively. The chambers 201, 203, and 205 are closed by a rotatable closure and by-pass valve member 207 yieldingly held against the face of the valve 200

by a spring 209 and nut 219 on the valve shaft 208, as shown. The closure member 207 is keyed to the shaft 208 to rotate therewith and to be capable of movement longitudinally thereof. In the operation of the valve the central chamber 201 is successively connected first with the chamber 203 during the rotation of the valve member 207 through substantially one-half of a cycle and then with the chamber 205 during substantially the remaining half of the cycle, as will be apparent from an inspection of Figs. 9, 10, and 11, and during these operations when suction is being established in the chamber 203 by the connection of the chamber with the central chamber 201 through the by-pass valve member 207, provision is made for connecting the other chamber 205 with the atmosphere, as shown in Fig. 10, and for this purpose a second by-pass passage 221 is provided in the rotatable valve member 207. Similarly when the chamber 205 is connected by the by-pass 207 to the central chamber 201, then the chamber 203 is connected by the by-pass 221 to the atmosphere. In order to soften the action of the opening of the chambers 201, 203, and 205, air is admitted through the bleeder ports 223, 227, as shown in Fig. 9, to prematurely and gradually lower the vacuum within the chamber just prior to the sudden opening of the chambers by the valve 207.

In order to remove any excess liquid that is discharged into the bottles, the nozzles 146 are connected to either of the vacuum chambers 210, 211 and, as above stated, comprise an outer tube 146 fast in the filling head 64 and a smaller inner tube 160 concentrically positioned in the outer tube 146 and attached to the filling head 64, as shown in Fig. 5. The tube 160 communicates with the liquid supply pipe 154 through the chamber 162, check valve 220 and passageway 152. The annular space 164 formed between the outer tube 146 and the inner tube 160 communicates with the vacuum chambers 210, 211 through the passageways 166, 150, 222, pipe connections 224, 226 and check valves 228, 229. It will be observed that when the vacuum chamber 210 is connected to the vacuum pump through the valve 200, the check valves 216, 229 will be closed and the check valve 228 will be open, thus drawing the surplus liquid from the bottle into the chamber 210 when the liquid reaches a level above the end 230 of the nozzle 146 and, conversely, when the chamber 211 is connected to the vacuum pump through the valve 200, the check valves 217, 228 will be closed and the check valve 229 open and the air and surplus liquid will be withdrawn from the bottle into the chamber 211. When the chamber 210 is opened to atmospheric pressure through the valve 200, as has been described, any surplus liquid which may have accumulated in the chamber 210 will be discharged through the pipe 214 and check valve 216 into the supply tank 10. The chamber 211 will likewise be emptied when it is opened to atmospheric pressure.

In order to prevent dripping of the liquid from the filling nozzles after the bottle has been removed from bottle filling position, the liquid passage through which liquid flows to each filling nozzle is provided with a valve 220 herein shown as comprising a conical valve face 232 and a depending guide 234. The guide 234 is herein shown as made cruciform in section to provide passages through which the liquid may flow, and four inlet ports 236 are provided in the valve seat sleeve 238. As illustrated in Figs. 5 and 6, when the bottle is in filling position, the valve 220 is raised by the pressure of the liquid against the under surface thereof and is caused to move into the position shown in Fig. 5, permitting the liquid to flow freely from the valve passage through the valve to the liquid chamber 162 in the filling head and thence through the inner nozzle or tube 160 comprising a part of the filling nozzle, as above described. When the bottle is removed from filling position and the suction broken, the valve falls into the position shown in Fig. 6 closing the liquid passage, and in order to prevent the body of liquid remaining within the chamber 162 and in the inner tube 160 from eventually dripping from the end of the filling nozzle, provision is made for establishing communication between the chamber 162 and the overflow or suction passage 166, and, as herein shown, the wall 240 subdividing the chamber 162 and the passage 166 is provided with an opening 242 which is arranged to be opened and closed by a conical auxiliary valve member 244 formed on the valve 220, as shown. By reference to Figs. 5 and 6, it will be apparent that during the operation of the machine, when the valve is in the raised position shown in Fig. 5 during the filling of the bottle, the opening 242 is closed by the auxiliary valve member 244, and when the valve falls into the position shown in Fig. 6 upon removal of the bottle from bottle filling position, then the opening 242 is opened, permitting the suction within the suction passage 166 to exhaust the body of liquid contained within the chamber 162 and nozzle 160, and to carry the same back to the overflow chamber. In this manner, after each bottle filling operation the chamber 162 and the liquid nozzle 160 are completely emptied of their liquid contents, thus preventing the subsequent dripping of liquid from the filling nozzle. This drip preventing feature of the present invention eliminates a disadvantage which experience has shown to be inherent in all prior filling machines of which I am aware and contributes to the maintenance of the machine in a clean and sanitary condition.

During the operation of the machine continuous suction is created at the filling heads, and inasmuch as a portion of the entire number of filling heads function to fill the bottles at one time, the remaining heads are open to the atmosphere and, consequently, a vacuum pump of sufficient capacity is utilized to provide the necessary amount of suction to perform the filling operation.

The individual filling heads having the filling nozzles mounted therein are, as above stated, removably secured to the central rotatable hollow member and this arrangement enables the passages therein and the nozzle to be cleaned in a most economical and simple manner, and contributes to the commercial value of the machine.

While the illustrated machine is particularly adapted for use in filling bottles, it will be understood that the essential features of the invention may be embodied in machines for filling any other containers, and while the preferred embodiments of the present invention have been herein illustrated and described, it will be understood that the invention may be embodied in other forms within the scope of the following claims.

Having thus described the invention, what is claimed is:

1. In a vacuum operated filling machine, in combination, a filling nozzle adapted to be sealed by a bottle, a liquid conduit connected with the

filling nozzle, a valve in the liquid conduit located above the discharge end of the filling nozzle for controlling the flow of liquid therethrough, said nozzle having a liquid tube and a suction tube, a suction conduit connected to the suction tube and filling nozzle, and means rendered operative when the bottle is removed from the filling nozzle for automatically establishing communication between the suction conduit and a portion of the liquid conduit between said valve and the end of the nozzle when the valve is closed for removing liquid therefrom to prevent dripping from the end of the nozzle.

2. In a filling machine, in combination, a filling nozzle, a liquid conduit connected with the filling nozzle, a suction conduit, and a single valve member for controlling the flow of liquid through the liquid conduit and for establishing communication between the suction conduit and a portion of the liquid conduit between the valve and the end of the filling nozzle when the valve is closed to thereby remove liquid therefrom to prevent dripping from the nozzle.

3. In a vacuum operated filling machine, in combination, a filling nozzle provided with a liquid passage and a suction passage, a filling head block in which the nozzle is mounted, said block being provided with a liquid passage connected with the liquid passage of the filling nozzle and a suction passage connected with the suction passage of the filling nozzle, and being provided with an opening establishing communication between the suction passage and the portion of the liquid passage immediately above the filling nozzle, and a single movable valve member having provision for controlling the flow of liquid through the liquid passage in said block and for closing and opening the said opening for the purpose specified when the valve is in its opened and closed positions respectively.

4. In a filling machine, in combination, a filling nozzle adapted to be sealed by a bottle, a liquid conduit connected with the filling nozzle, a suction conduit, and means rendered operative by removal of the bottle from the filling nozzle for automatically establishing communication between the suction conduit and the liquid conduit whereby to prevent dripping of the liquid from the end of the filling nozzle.

5. In a vacuum operated filling machine, in combination, a filling nozzle provided with a liquid passage and a suction passage, means for evacuating the container when in operative filling condition, a liquid supply tank operatively connected with the liquid passage of the filling nozzle and from which the liquid may be drawn by the vacuum within the container to fill the bottle, overflow means including two overflow tanks, a suction line connected with the suction passage of the filling nozzle, a valve member provided with two outer chambers and an inner chamber, the outer chambers being respectively connected to the overflow tanks and the inner chamber being connected to a source of suction, and a positively driven rotary member for establishing communication between the inner chamber and first one and then the other of the outer chambers, said rotary means having provision for connecting the outer chambers successively to permit the entrance of air therein, said means operating to admit air to one outer chamber when the second outer chamber is being connected with the inner chamber, said valve having provision whereby the admission of air to said chambers takes place gradually.

6. In a filling machine, in combination, a filling nozzle adapted to be sealed by a bottle, a liquid conduit connected with the filling nozzle, a valve in the liquid conduit located above the discharge end of the filling nozzle for controlling the flow of the liquid therethrough, a suction conduit, and means rendered operative by removal of the bottle from the filling nozzle for automatically establishing communication between the suction conduit and the portion of the liquid conduit between said valve and the end of the filling nozzle when the valve is closed for removing the liquid therefrom to prevent dripping from the end of the filling nozzle.

ARTHUR CLARENCE EVERETT.