United States Patent [19]

Koehn et al.

[11] **3,742,232**

[45] **June 26, 1973**

[54] **METHOD AND APPARATUS FOR EVALUATING THE OPERATION OF MACHINES FOR THE PRODUCTION AND/OR PROCESSING OF SMOKERS' PRODUCTS**

[75] Inventors: **Jurgen Koehn; Gunter Wahle; Frank-Dieter Lehmann,** all of Wentorf, Germany

[73] Assignee: **Hauni-Werke Korber & Co. KG,** Hamburg, Germany

[22] Filed: **Mar. 30, 1971**

[21] Appl. No.: **129,370**

[30] **Foreign Application Priority Data**

Apr. 2, 1970 Germany..... P 20 15 619.8

[52] **U.S. Cl.**..... **235/151.3,** 131/21 R, 340/213 Q

[51] **Int. Cl.**..... **G06f 15/46**

[58] **Field of Search**..... 235/151.13; 131/21 R, 21 A, 21 B, 21 C, 21 D, 22 R, 22 A; 444/1; 340/213 Q

[56] **References Cited**

UNITED STATES PATENTS

3,549,514 12/1970 Brown et al. ..... 235/151.13 X

Primary Examiner—Malcolm A. Morrison
Assistant Examiner—R. Stephen Dildine, Jr.
Attorney—Michael S. Striker

[57] **ABSTRACT**

The operation of a single machine or a group of two or more machines for the production and/or processing of smokers' products is monitored by detectors serving to measure the quantity of comminuted tobacco or filter material which is admitted at each inlet and discharged at each outlet of the machine or machines. The detectors produce electric signals for evaluation by a computer or by a system of totalizing, multiplying and/or dividing circuits which furnish indications of the ratio of admitted to discharged quantities of tobacco or filter material.

37 Claims, 16 Drawing Figures

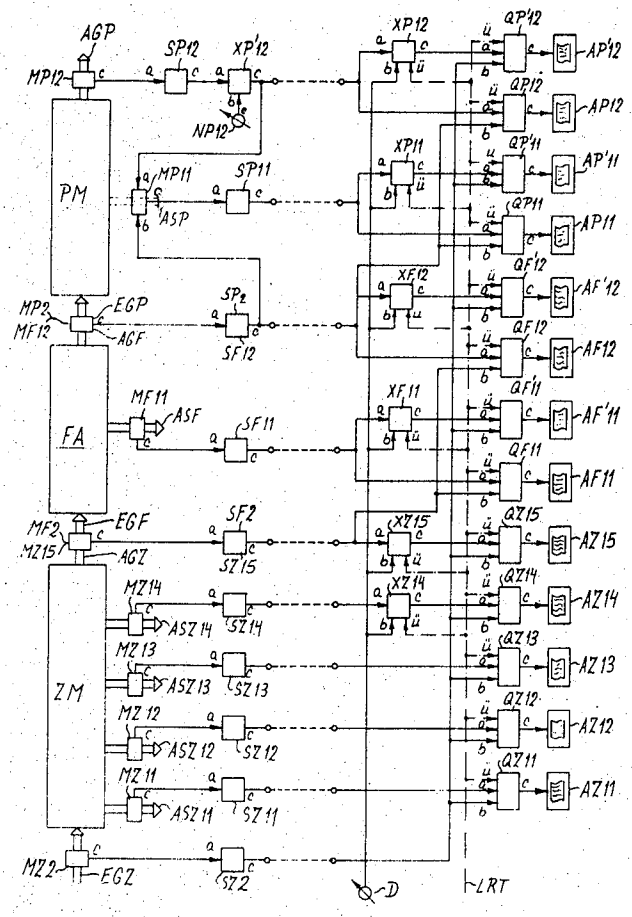

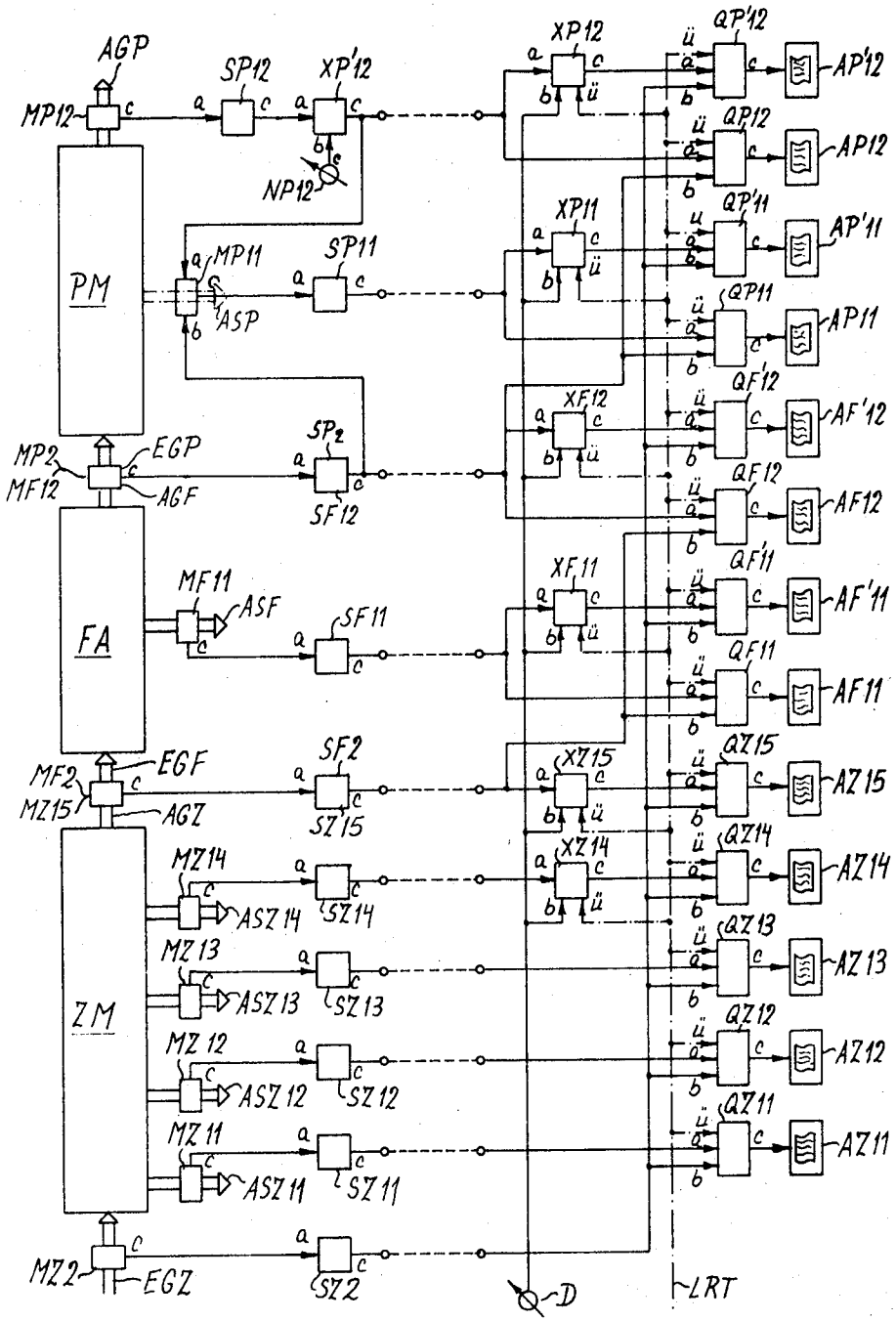

Fig. 1

Inventor:
JÜRGEN KOEHN
GUNTER UAHLE
FRANZ-DIETER LEHMANN
BY
ATTORNEY

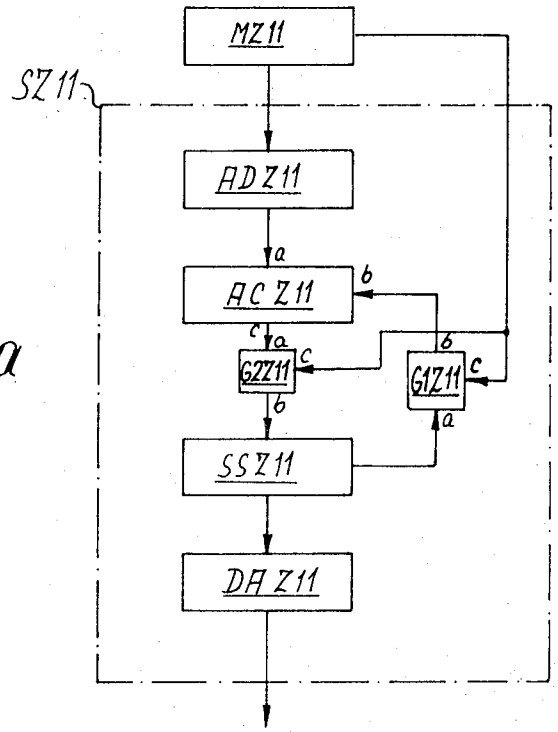

Fig. 1a

Inventor:
JÜRGEN KOEHN
GUNTER WAHLE
FRANK-DIETER LEHMANN
By Walter J. Baker
ATTORNEY

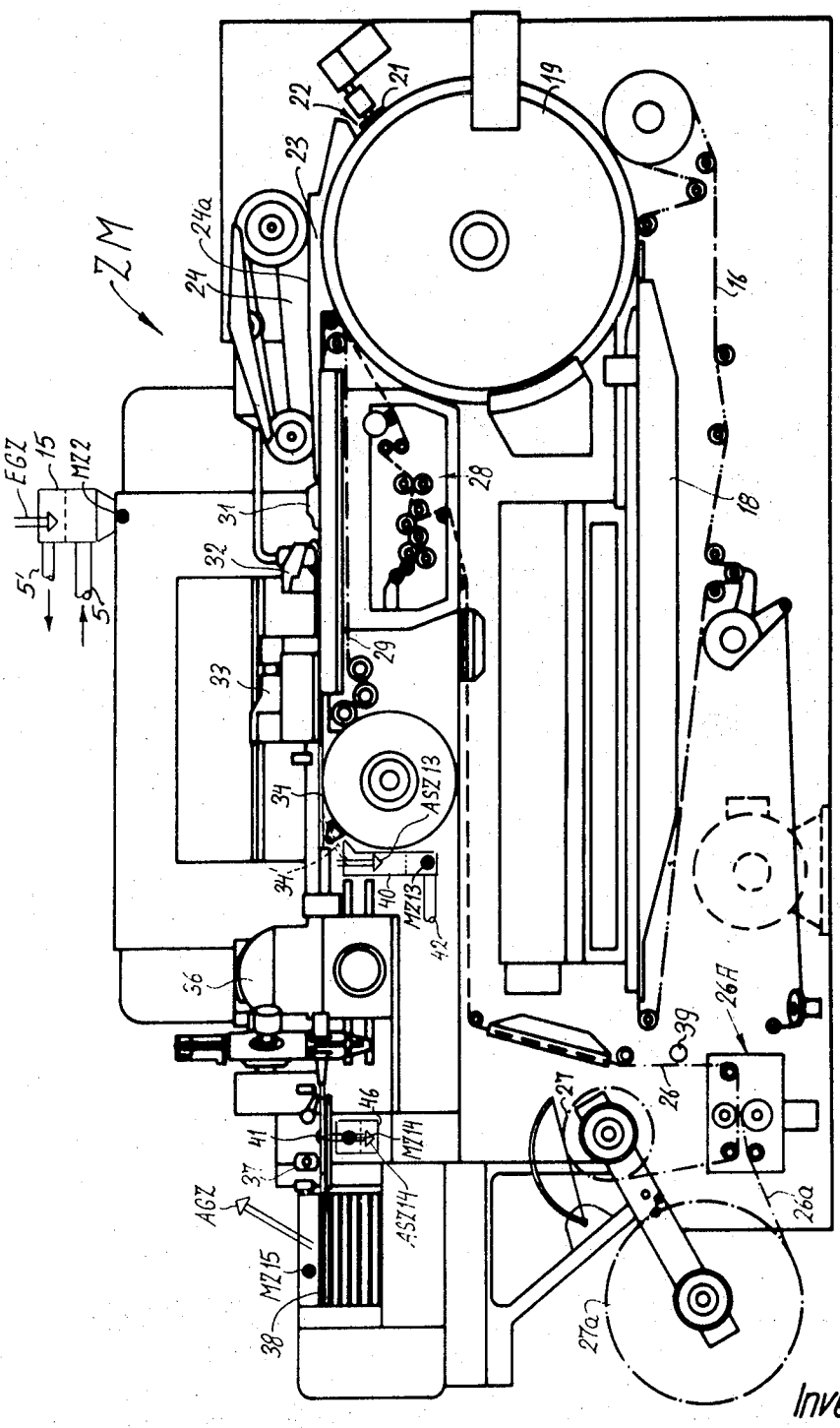

Fig. 2

Inventor:
JURGEN KOEHN
GUNTER HAHLE
FRANK-DIETER LEHMANN
BY [signature]
ATTORNEY

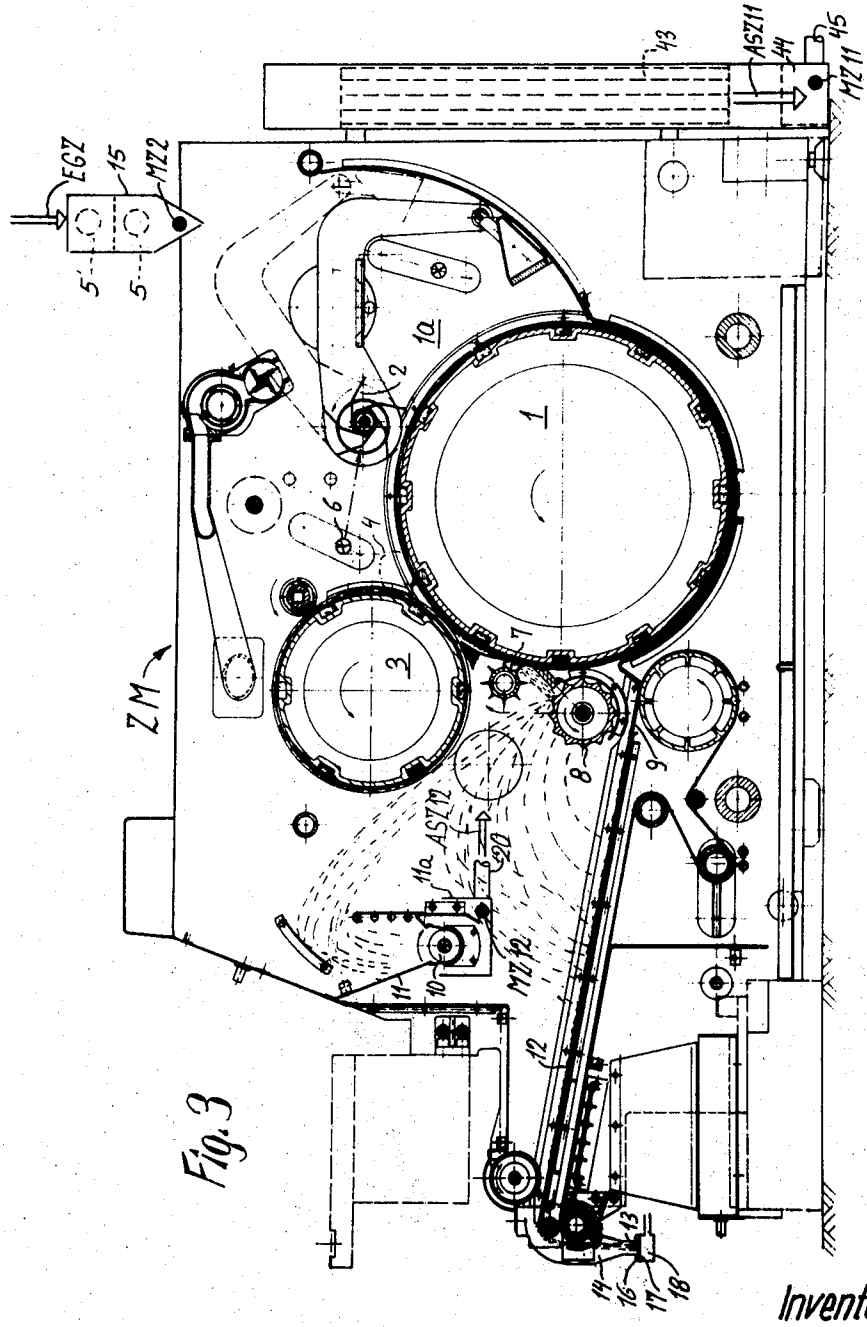

Fig. 3

Inventor:
JÜRGEN KOEHN
GUNTER WAHLE
FRANK-VIETER LEHMAN
BY [signature]
ATTORNEY

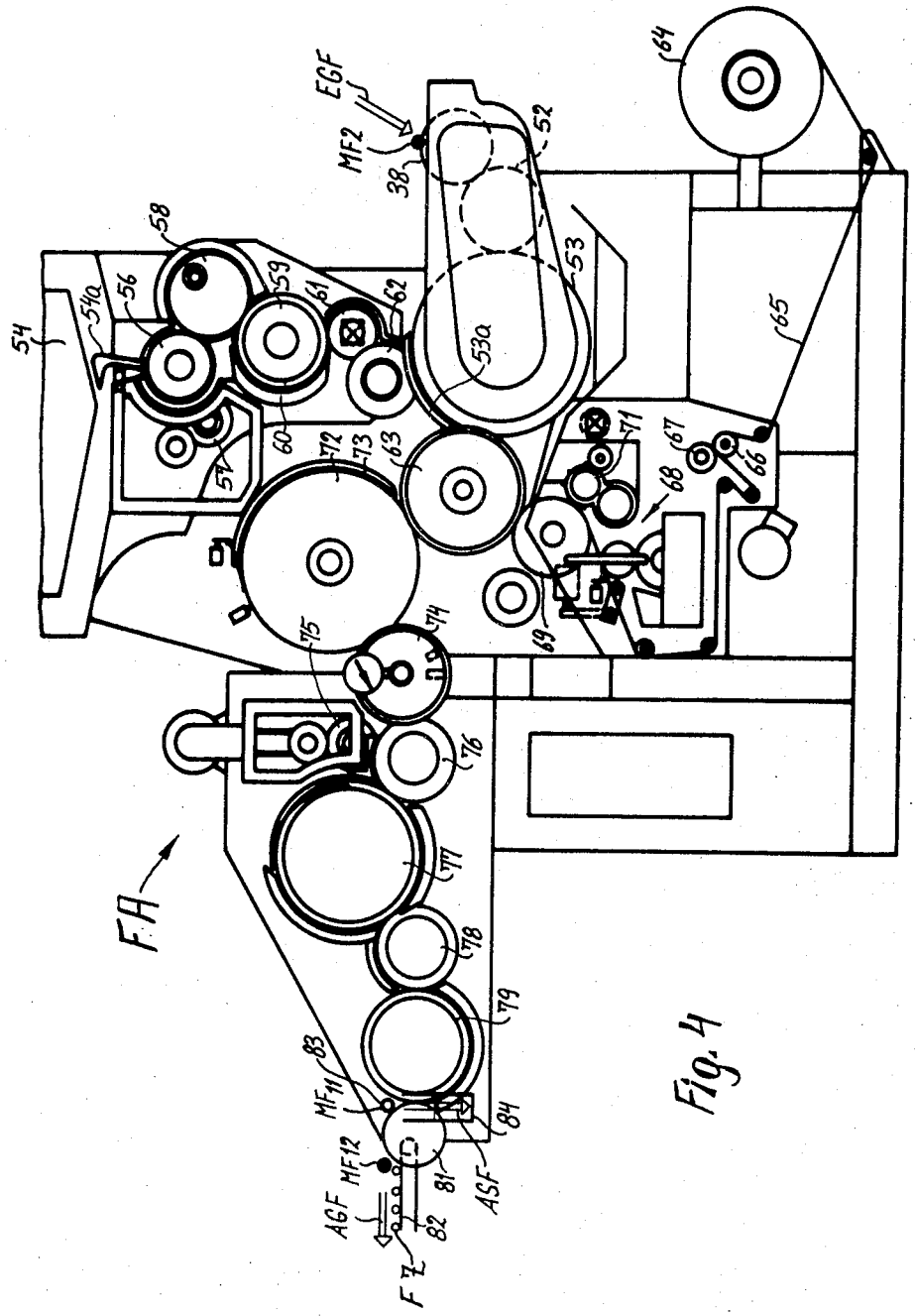

Fig. 4

Inventor:
JÜRGEN KOEHN
GUNTER WAHLE
FRANK-DIETER LEHMANN
BY
ATTORNEY

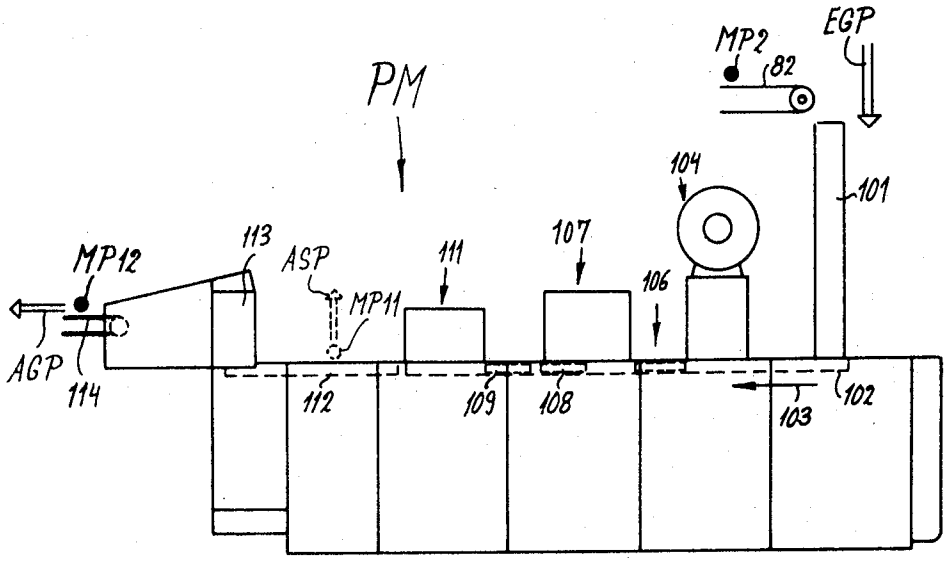

Fig. 5

Inventor:
JURGEN KOEHN
GUNTER HAHLE
FRANK-DIETER LEHMANN
BY Adam I. Weber
ATTORNEY

Fig. 12

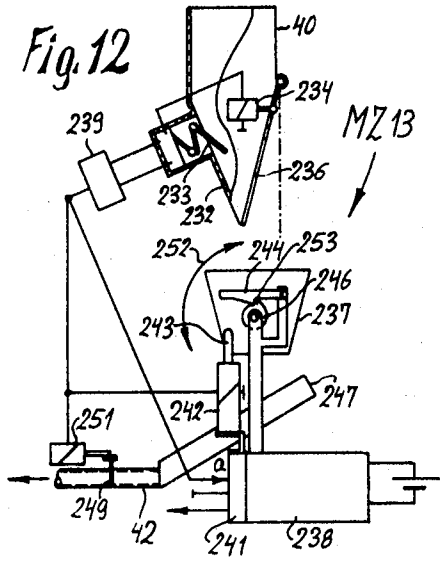

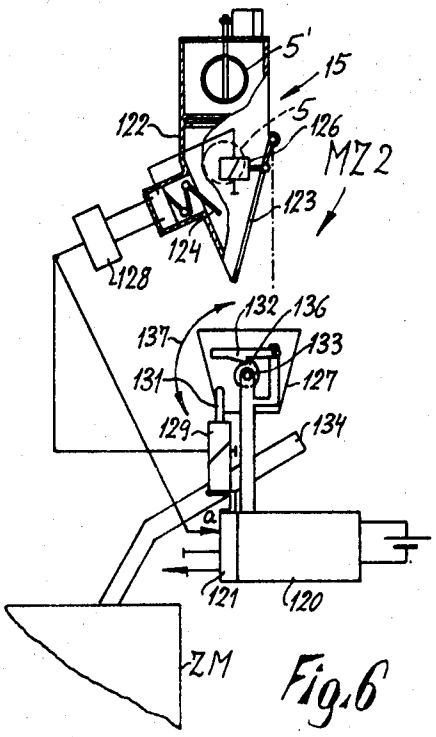

Fig. 6

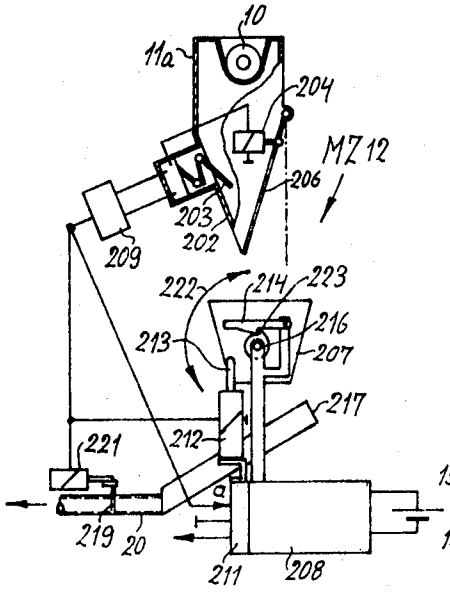

Fig. 11

Fig. 9

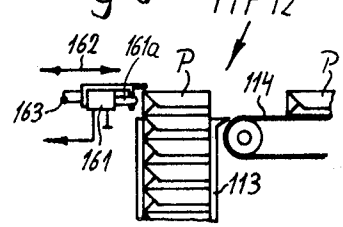

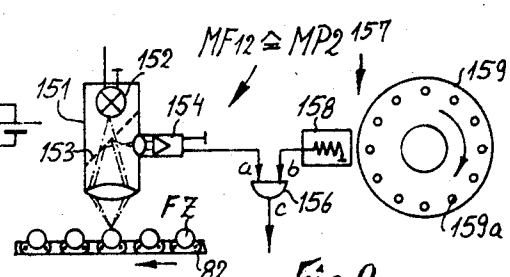

Fig. 8

Inventor:
JÜRGEN KOEHN
GÜNTER WAHLE
FRANK-DIETER GEHMAN
BY [signature]
ATTORNEY

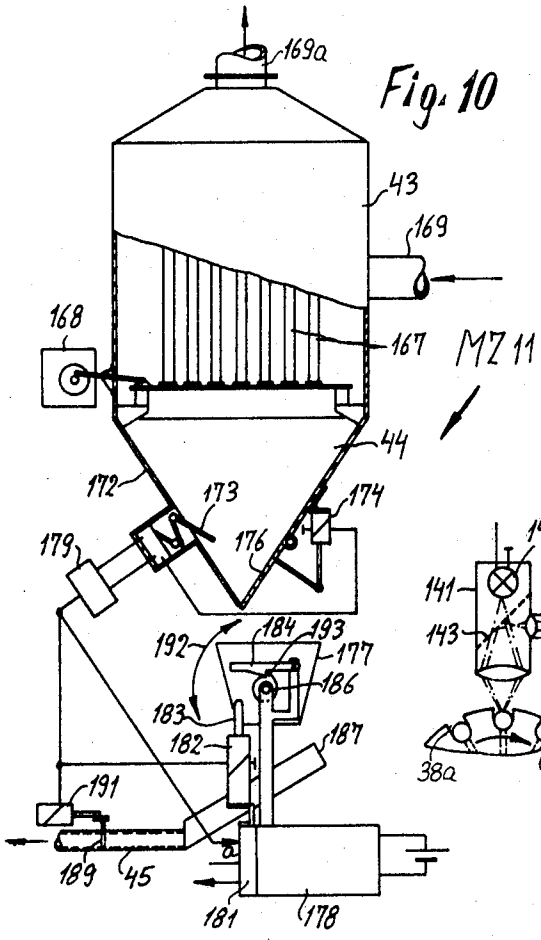

Fig. 10

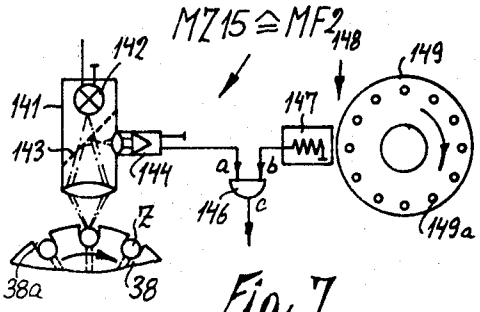

Fig. 7

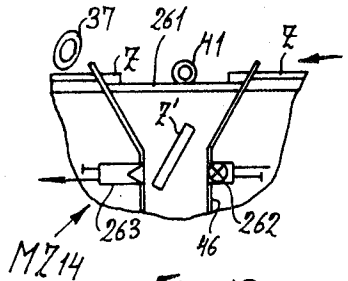

Fig. 13

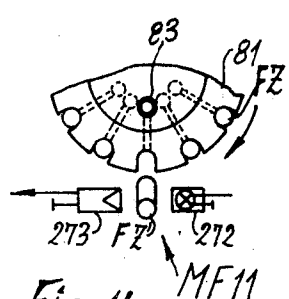

Fig. 14

Inventor:
JÜRGEN KOEHN
GÜNTER HAHGE
FRANK-DIETER LEHMANN
BY Adam I. Stein
ATTORNEY

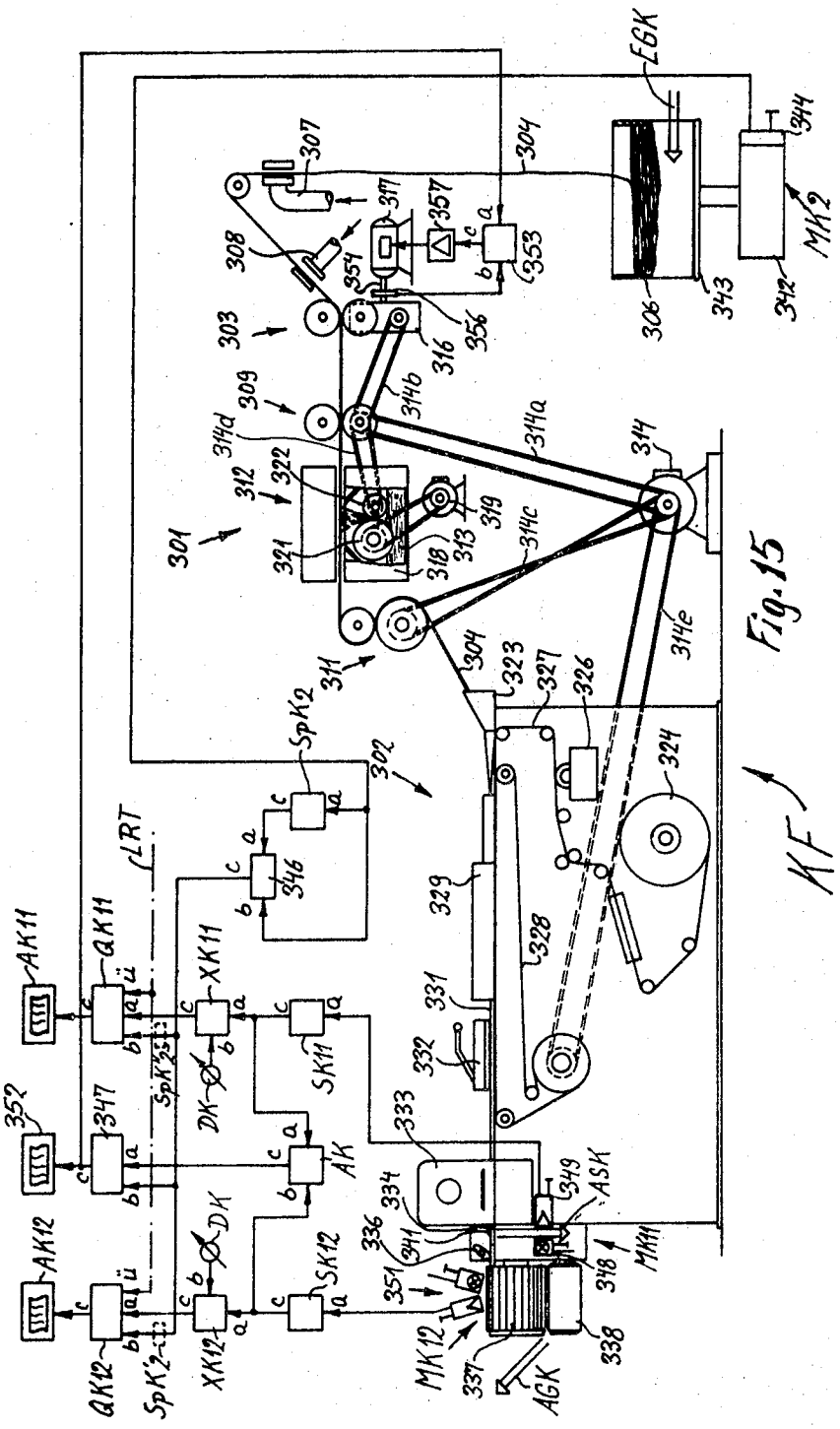

Fig. 15

KF

Inventor:
JURGEN KOCHN
GUNTER WAHLE
FRANK-DIETER LICHMAN

BY
ATTORNEY

METHOD AND APPARATUS FOR EVALUATING THE OPERATION OF MACHINES FOR THE PRODUCTION AND/OR PROCESSING OF SMOKERS' PRODUCTS

BACKGROUND OF THE INVENTION

The present invention relates to a method and apparatus for supervising and evaluating the operation of machines which are utilized for the production and/or processing of smokers' products, such as parts or groups of cigarettes, cigars, cigarillos, filter rods and/or ingredients of such commodities.

In accordance with the present invention, smokers' products include finished smokers' products, such as plain or filter-tipped cigars, cigarillos or cigarettes; semifinished products, such as components of filter-tipped cigars, cigarillos or cigarettes; and the ingredients of finished or semifinished products, such as tobacco leaves, shredded tobacco, filaments or grains of filter material, webs of cigarette paper, adhesive paste, plasticizer for filaments of synthetic plastic filter material and/or other substances which are needed for the production and/or processing of smokers' products.

It is already known to monitor the operation of machines for the production or processing of smokers' products.

The presently known monitoring operations involve the utilization of testing or detecting devices which determine the quality or condition of smokers' products (for example, the quality or condition of cigarettes which are produced in a cigarette rod making machine), and the utilization of the results of such tests to regulate the operation of the machine and/or to classify the products according to their quality or condition. Thus, if the testing operation involves determining the mass or quantity of tobacco in plain or filter-tipped cigarettes, the results of the tests can be utilized to regulate the quantity of tobacco shreds in the stream which is formed in the distributor of a cigarette rod making machine and is converted into the filler of a wrapped cigarette rod.

It is also known to record the periods of operation and idleness of a machine for the production and/or processing of smokers' products, and/or to separately record the periods during which a machine respectively turns out satisfactory and unsatisfactory products. All such monitoring operations are intended to furnish information concerning the efficiency of automatic or semiautomatic machines which are used in tobacco processing plants. The presently known monitoring methods and apparatus exhibit the drawback that the information which is obtained is not immediately suited for accurate and convenient determination of the efficiency, lack of efficiency and/or other characteristics of the monitored machine or machines, as well as that the information which is collected and recorded does not include all such data which are best suited to facilitate an evaluation of the operation and to enable the supervisory personnel to undertake, with little loss in time, all such steps which will result in elimination of causes of unsatisfactory output and/or unsatisfactory quality of products.

SUMMARY OF THE INVENTION

An object of the invention is to provide a novel method of supervising and evaluating the operation of one or more machines for the production and/or processing of smokers' products in such a way that the results can be utilized to determine the origins and causes of losses in commodities which are being processed in such machines.

Another object of the invention is to provide an evaluating method which enables the supervisory personnel to determine the quantities and causes of losses in tobacco and/or filter material in discrete machines and/or in production lines which are composed of a plurality of directly or indirectly coupled machines for the production and/or processing of smokers' products.

A further object of the invention is to provide a method of automatically determining the ratio of quantities of tobacco or filter material which are fed into one or more producing or processing machines to the quantity of tobacco or filter material which is contained in the product, namely, in the satisfactory articles or portions of satisfactory articles which issue from such machine or machines.

An additional object of the invention is to provide a novel and improved apparatus for the monitoring of machines which are used in the production and/or processing of smokers' products, particularly for determining the losses in tobacco, filter material and/or other valuable commodities which constitute the ingredients of plain or filter-tipped cigarettes, cigars or cigarillos.

Another object of the invention is to provide an apparatus which serves to determine and indicate those quantities of tobacco or filter material which do not form part of satisfactory products and leave one or more producing or processing machines in the same form or condition in which such materials enter the machine or machines as well as those quantities which do not form part of satisfactory products and leave the machine or machines in altered condition.

The method of the present invention is employed for supervising and evaluating the operation of machines for the production and/or processing of smokers' products wherein the commodities which are contained in or constitute smokers' products are admitted into a machine at at least one first point or inlet and are discharged from the machine at at least one second point or outlet. The method comprises a first measuring step which includes measuring the quantity of commodities which are admitted at at least one first point or inlet and producing first signals which are indicative of the measured incoming quantities, a second measuring step including measuring the quantity of commodities which are discharged at at least one second point or outlet and producing signals which are indicative of the measured outgoing quantities, and utilizing the first and second signals for an automatic computing operation, for example, to establish a ratio of the quantities of incoming commodities within a predetermined period of time to the quantities of outgoing commodities within the same period of time.

As a rule, the second measuring step will comprise measuring the quantity of discharged commodities at a plurality of second points including a main outlet for satisfactory commodities and one or more secondary outlets for unsatisfactory commodities, and producing a plurality of signals each of which is indicative of the measured quantity at a different second point. The automatic computing operation then preferably involves establishing the ratios of quantities of incoming commodities to quantities of outgoing commodities at each outlet. For example, a cigarette rod making machine

will have an inlet for shredded tobacco, a first or main outlet for plain cigarettes, and one or more secondary outlets for evacuation of tobacco dust, ribs and/or stem, defective plain cigarettes (which contain tobacco), and/or defective portions of a wrapped tobacco filler rod (which also contain tobacco).

If the commodities are admitted and discharged at timely spaced intervals, the first measuring step comprises producing successive first signals which are indicative of successively admitted quantities of commodities within a predetermined period of time (e.g., within a full shift), and the second measuring step then comprises producing successive second signals which are indicative of successively discharged quantities of commodities within the same period of time. The computing operation then preferably involves establishing a ratio of the sum of quantities indicated by the first signals to the sum of quantities indicated by the second signals.

As mentioned before, the commodities are normally discharged at several second points including a main outlet for discharge of satisfactory commodities and one or more secondary outlets for unsatisfactory or defective commodities. The second measuring step then comprises producing discrete second signals which are respectively indicative of the measured quantities of satisfactory and unsatisfactory commodities. The measuring steps may involve a counting of discrete commodities, such as plain cigarettes, filter cigarettes, packs of plain or filter cigarettes, or sections of a filter rod; or weighing of bulky commodities, such as tobacco shreds, fragments of tobacco ribs or stem, tobacco dust or filamentary filter material. If the commodities are in the form of discrete articles and the purpose of the method is to determine the quantities of incoming and outgoing tobacco or filter material, the signals which represent numbers of counted articles can be modified (multiplied) with a factor which is indicative of the average quantity of tobacco or filter material in a discrete article.

The novel features which are considered as characteristic of the invention are set forth in particular in the appended claims. The improved apparatus itself, however, both as to its construction and its mode of operation, together with additional features and advantages thereof, will be best understood upon perusal of the following detailed description of certain specific embodiments with reference to the accompanying drawing.

BRIEF DESCRIPTION OF THE DRAWING

FIG. 1 is a diagrammatic view of a production line consisting of three directly coupled machines for the production and processing of filter cigarettes and of an evaluating apparatus which is employed to determine the efficiency of the individual machines and of the entire production line;

FIG. 1*a* is an interconnection pattern for a totalizer and storage unit.

FIG. 2 is an elevational view of a cigarette rod making machine which constitutes one of the three machines in the production line shown in FIG. 1;

FIG. 3 is an enlarged vertical sectional view of a portion of the machine shown in FIG. 2;

FIG. 4 is an elevational view of a filter cigarette making machine which constitutes a second machine in the production line shown in FIG. 1;

FIG. 5 is a schematic elevational view of a packing machine which constitutes the third machine in the production line shown in FIG. 1;

FIG. 6 is a somewhat schematic enlarged view of a first measuring device or detector which is utilized in the production line of FIG. 1 to measure the quantity of tobacco which is admitted into the machine of FIG. 2;

FIG. 7 is a similar schematic view of a second measuring device or detector which is used in the machine of FIG. 2 or 4 to determine the number of satisfactory plain cigarettes which leave the machine of FIG. 2 and enter the machine of FIG. 4;

FIG. 8 is a schematic view of a third detector which is used to count the number of satisfactory filter cigarettes leaving the machine of FIG. 4 and entering the machine of FIG. 5;

FIG. 9 is a schematic view of a fourth detector which is used in the machine of FIG. 5 to determine the number of satisfactory packs of filter cigarettes;

FIG. 10 is a schematic view of a fifth detector which is used to determine the quantities of tobacco dust leaving the machine of FIG. 2;

FIG. 11 is a schematic view of a sixth detector which is used to determine the quantities of tobacco ribs or stem leaving the machine of FIG. 2;

FIG. 12 is a schematic view of a seventh detector which is used to determine the quantities of shredded tobacco which leave the machine of FIG. 2 in unsatisfactory portions of wrapped tobacco filler rods;

FIG. 13 is a schematic view of an eighth detector which is used to determine the number of unsatisfactory plain cigarettes leaving the machine of FIG. 2;

FIG. 14 is a schematic view of a ninth detector which is used to determine the number of unsatisfactory filter cigarettes leaving the machine of FIG. 4; and

FIG. 15 is a schematic side elevational view of a filter rod making machine and of an apparatus which serves to evaluate the efficiency of such machine.

DESCRIPTION OF THE PREFERRED EMBODIMENTS

Referring first to FIG. 1, there is shown the diagram of a production line which is composed of three directly coupled machines for the production and processing of filter cigarettes FZ (see FIG. 4). The production line includes a cigarette rod making machine ZM, a filter cigarette making machine FA which receives the satisfactory output of the machine ZM, and a packing machine PM which receives the satisfactory output of the machine FA and discharges packs P (see FIG. 9) of filter cigarettes FZ.

The cigarette rod making machine ZM has a single inlet EGZ constituting the point of admission of shredded tobacco which is converted into a stream. The stream is thereupon converted into a filler rod which is wrapped to form a wrapped cigarette rod ready to be subdivided into plain cigarettes of desired length. Satisfactory plain cigarettes Z (see FIG. 7) are discharged at the main outlet AGZ of the cigarette rod making machine ZM. This outlet is one of several points where the tobacco which is admitted at the inlet EGZ leaves the machine ZM. The outlet AGZ discharges satisfactory plain cigarettes Z into the inlet EGF of the filter cigarette making machine FA. The inlet EGF is the only point where the machine FA receives the intermediate product (plain cigarettes Z of satisfactory quality)

which is discharged by the cigarette rod making machine ZM. The main outlet AGF of the machine FA constitutes one of two points where the plain cigarettes (forming part of filter cigarettes) are discharged from the machine FA. The filter cigarettes FZ which reach the outlet AGF must be of satisfactory quality because only satisfactory filter cigarettes can be admitted into the single inlet EGP of the packing machine PM. The construction of the parts at the outlet AGX of the cigarette rod making machine ZM can be identical with the construction of parts at the inlet EGF of the filter cigarette making machine FA. The packing machine PM provides groups of satisfactory filter cigarettes with one or more envelopes, revenue labels and/or tear strips to form packs of filter cigarettes and discharges satisfactory packs P by way of an outlet AGP which constitutes the single point where the packs can automatically leave the machine PM.

The quantity of tobacco which is admitted into the cigarette rod making machine ZM by way of the inlet EGZ is measured by a measuring device or detector MZ2. A second measuring device or detector MZ15 is installed at the outlet AGZ to determine the number of satisfactory plain cigarettes Z which leave the machine ZM to enter the inlet EGF of the machine FA. The detector MZ15 can be provided in addition to or it may constitute a detector MF2 which is located at the inlet EGF and determines the number of satisfactory plain cigarettes Z which enter the filter cigarette making machine FA. The number of satisfactory filter cigarettes FZ which leave the machine FA by way of the main outlet AGF is determined by a detector MF12 which can be provided in addition to or constitutes a detector MP2 serving to determine the number of satisfactory filter cigarettes FZ entering the packing machine PM by way of the inlet EGP. A further detector MP12 is provided at the outlet AGP to determine the number of satisfactory packs P which leave the packing machine PM. The detectors MZ15 (MF2), MF12 (MP2) and MP12 can be designed to indicate the quantity of tobacco which passes through the respective inlets and outlets. For example, the detector MP12 can be designed to indicate the total quantity of tobacco in the satisfactory filter cigarettes FZ which are contained in a satisfactory pack P leaving the packing machine PM by way of the outlet AGP.

The cigarette rod making machine ZM further comprises four secondary or auxiliary outlets ASZ11, ASZ12, ASZ13, ASZ14 serving for evacuation of that quantity of tobacco which constitutes the difference between the quantity admitted by way of the inlet EGZ and the quantity evacuated by way of the main outlet AGZ. Thus, the total quantity of tobacco which leaves by way of the secondary outlets ASZ11–ASZ14 is a good indicator of the efficiency of the cigarette rod making machine ZM and, to some extent, of the efficiency of the entire production line. The tobacco which leaves by way of the secondary outlets ASZ11 to ASZ14 is in the form of dust, tobacco ribs or stem, fillers of unsatisfactory plain cigarettes which are not permitted to reach the main outlet AGZ, and wrapped or unwrapped fillers which are removed due to defects or as a precautionary measure during certain stages of operation of the machine ZM, for example, when the machine ZM is started, during acceleration of the machine to normal speed, and/or during deceleration of the machine from a higher speed to a lower speed or from the lower speed to zero speed. Measuring devices or detectors MZ11, MZ12, MZ13, MZ14 are respectively mounted in the general areas of the secondary outlets ASZ11–ASZ14 to measure the quantity of tobacco which leaves the machine ZM by way of the respective secondary outlets.

The filter cigarette making machine FA comprises an auxiliary or secondary outlet ASF which constitutes the point of discharge of unsatisfactory filter cigarettes. The number of unsatisfactory filter cigarettes which leave the machine FA by way of the secondary outlet ASF is counted by a measuring device or detector MF11. The detector MF11 can be designed to measure the quantities of tobacco leaving the machine FA by way of the outlet ASF, and such quantities are a reliable indicator of the efficiency of the machine FA and also of the efficiency of the entire production line.

The packing machine PM comprises the aforementioned single outlet AGP for evacuation or discharge of satisfactory packs P of filter cigarettes FZ. The defective packs or portions of defective packs are removed from the machine PM by hand. The outlet for manual removal of unsatisfactory packs or portions of packs is indicated by phantom lines, as at ASP, and the quantity of tobacco in the unsatisfactory packs which are withdrawn at ASP is determined by a measuring device or detector MP11. This detector can indirectly determine the quantities of tobacco which leave the machine PM via outlet ASP by taking into consideration the average quantity of tobacco in a satisfactory plain cigarette entering the machine PM by way of the inlet EGP, the quantity of tobacco in a pack which leaves the machine PM by way of the main outlet AGP, and the number of defective packs or portions or packs which leave the machine PM by way of the secondary outlet ASP. The manual removal of unsatisfactory packs or unsatisfactory portions of packs can take place at one or more points of the packing machine PM so that the secondary outlet ASP can be considered as a single secondary outlet or as being indicative of two or more secondary outlets for manual removal of commodities which pass through the packing machine. The detector MP11 can constitute a differential counter circuit having an output *c* and inputs *a* and **b**. The output *c* serves to emit a signal which is indicative of the difference of quantities represented by signals transmitted by way of the inlets *a* and *b*. The signals transmitted to the input *a* of the detector MP11 represent the number of satisfactory packs P of filter cigarettes which leave the machine PM at the outlet AGP and the signals at the input *b* are indicative of the number of satisfactory filter cigarettes FZ which enter the machine PM at the inlet EGP. The detectors MZ11–MZ15, MF11, MF12, MP11, MP12 can be said to constitute measuring means of one type, and the detectors MZ2, MF2 and MP2 can be said to constitute measuring means of another type. The detectors of the one type determine the quantity of outgoing tobacco and the detectors of the other type determine the quantity of incoming tobacco.

The outputs *c* of the detectors MZ2, MZ11–MZ15, MF2, MF11, MF12, MP2, MP11 and MP12 are connected with the inputs *a* of similarly referenced adding or totalizing circuits SZ2, SZ11, SZ12, SZ13, SZ14, SZ15 (SF2), SF11, SF12 (SP2), SP11 and SP12. The purpose of the totalizing circuits (hereinafter called totalizers for short) is to record the sum of signals which are furnished by the respective measuring devices or

detectors and which are indicative of the quantity of tobacco passing the respective inlets and outlets. The output *c* of the totalizer SP12 for signals furnished by the detector MP12 for satisfactory cigarette packs P is connected with the input *a* of a multiplying circuit XP'12 (hereinafter called multiplier for short) which has a second input *b* connected with the output *c* of an adjustable source NP12 of reference signals. Such reference signals are indicative of the average quantity of tobacco in a satisfactory pack P of filter cigarettes FZ or of the number of filter cigarettes FZ in a satisfactory pack P.

The outputs *c* of the totalizers SZ11, SZ12, SZ13 are respectively connected with the inputs *a* of dividing circuits QZ11, QZ12, QZ13 (hereinafter called dividers for short). The inputs *b* of the dividers QZ11–QZ13 are connected with the output *c* of the totalizer SZ2.

The outputs *c* of the totalizers SZ14, SZ15 (SF2), SF11, SF12 (SP2), SP11 and SP12 are respectively connected with the inputs *a* of multipliers XZ14, XZ15, XF11, XF12, XP11 and XP12. The inputs *b* of the just enumerated multipliers are connected with a source D of reference signals which are indicative of the average quantity of tobacco in a satisfactory plain or filter cigarette.

The outputs *c* of the multipliers XZ14, XZ15, XF11, XF12, XP11 and XP12 are respectively connected with the inputs *a* of dividers QZ14, QZ15, QF'11, QF'12, QP'11 and QP'12. The inputs *b* of the just enumerated dividers are connected with the output *c* of the totalizer SZ2. The output *c* of the totalizer SP12 is further connected with the input *a* of a divider QP12. The input *b* of the divider QP12 is connected with the output *c* of the totalizer SP2. The output *c* of the totalizer SP11 is further connected with the input *a* of a divider QP11 which has a second input *b* connected to the output *c* of the totalizer SP2. The output *c* of the totalizer SF12 is further connected with the input *a* of a divider QF12 having a second input *b* which is connected to the output *c* of the totalizer SF2. The output *c* of the totalizer SF11 is further connected with he input *a* of a divider QF11 having a second input *b* connected to the output *c* of the totalizer SF2.

The dividers QZ11 . . . QP'12 are respectively connected with similarly referenced signal recording devices AZ11, AZ12, AZ13, AZ14, AZ15, AF11, AF'11, AF12, AF'12, AP11, AP'11, AP12 and AP'12.

The totalizers SZ2, SZ11, SZ12, and SZ13 are known electronic circuits working on the (analogue) principle of measuring by means of operational amplifiers or on the (digital) principle of counting. FIG. 1*a* shows an example. The totalizers SZ14, SZ15 (SF2), SF11, SF12 (SP2), SP11 and SP12 are counters. Such counters are well-known and are, for example, described in the journal "Elektronik", No. 6, 1962, page 188. The multipliers XZ14, XZ15, XF11, XF12, XP11, XP12 and XP'12 are also known electronic circuits working on the analogue or digital principle as mentioned in connection with the totalizers SZ2 and SZ11–SZ13. Examples of analogue multipliers are described in the book "Elektronische Analogrechner" by H. Adler, 1968, VEB-Deutscher Verlag der Wissenschaften, Berlin, on pages 179 to 212. The same holds true for the dividers QZ11 to QP'12; each of these dividers is designed to furnish at its output *c* a signal which is indicative of the quotient of the values represented by signals transmitted to the respective inputs *a* and *b*. Ratio-forming circuits are well-known and are, for example, described in H. Adler's above-mentioned book on pages 206 to 209. Circuits which employ operational amplifiers and can be used as totalizers, multipliers and dividers in the arrangement shown in FIG. 1 are also disclosed in chapters 10.3.4. to 10.3.11 of a book by K. Steinbuch published in 1962 and entitled "Taschenbuch der Nachrichtenverarbeitung". The multiplying operations to be performed by the multipliers XZ14, XZ15, XF11, XF12, XP11 and XP12 are triggered by signals which are transmitted to their inputs *u* by a conduit LRT. The multiplier XP'12 performs the multiplications without any delay, i.e., as soon as it receives signals at the inputs *a* (totalizer SP12) and *b* (source NP12). The conduit LRT also transmits signals which cause the dividers QZ11 to QP'12 to start their computing operations. To this end, the dividers have third inputs *u* each of which is connected to the conduit LRT.

For the sake of clarity, the multipliers and dividers are shown in FIG. 1 as discrete circuits. It is clear that the multiplying and dividing operations can be performed serially by a single computer.

FIG. 1*a* shows an example of a totalizer with storage capability SZ11, and which is connected to a detector MZ11. Totalizer SZ11 consists of a known analogue-digital converter ADZ11, a known digital adder ACZ11, a known digital storage unit SSZ11 and a known digital-analogue converter DAZ11. GIZ11 is a known gate circuit, which allows a signal to pass from its input *a* to output *b* when there is a drive signal present at control input *c*. G2Z11 is a known gate circuit, which allows a signal to pass from its input *a* to output *b* when there is no drive signal at its control input.

Totalizer SZ11 works as follows:

When an analogue signal passes from detector MZ11, it is transformed into a digital signal by the analogue-to-digital converter ADZ11 and is then passed on to input *a* of adder ACZ11. Another signal is passed simultaneously from MZ11 to input *c* of gate circuit GIZ11, and this makes the gate circuit conductive so that the contents of storage unit SSZ11 pass on to input *b* of adder ACZ11. The output signal at output *c* of adder ACZ11, which corresponds to the sum of the signals standing at inputs *a* and *b* of adder ACZ11, passes to input *a* of storage unit SSZ11 and enters when the drive signal from MZ11 disappears at input *c* of gate circuit G2Z11, thus making the gate circuit conductive. The output signal from storage unit SSZ11 remains when the output signal from MZ11 disappears. The digital output signal from SSZ11 is transformed into an analogue signal by digital-to-analogue converter DAZ11 which thus corresponds to the sum of the individual analogue signals coming in series from MZ11.

Those details of the cigarette rod making machine ZM which require mentioning for full understanding of the present invention are illustrated in FIGS. 2 and 3. The illustrated machine is of the type known as GARANT and is produced by Hauni-Werke, Korber & Co. K.G., of Hamburg-Bergedorf, Western Germany.

Referring first to FIG. 3, there is shown a distributor which forms part of the cigarette rod making machine ZM shown in FIG. 2 and serves to form a continuous narrow tobacco stream 13 which is thereupon converted into a filler rod. The distributor comprises a magazine 1a which serves to store a substantial supply of shredded tobacco and is flanked at one side by a driven carded drum 1 which continuously transports a

layer of tobacco shreds past a first refuser 2 and thereupon past a second refuser 3. The magazine 1a receives shredded tobacco from a pneumatic conveyor 5 by way of a hopper 15. The first refuser 2 is a driven paddle wheel which equalizes the layer of tobacco shreds on the carding of the drum 1. The second refuser 3 is a carded drum which equalizes the once-equalized layer of tobacco shreds and accumulates a small supply 4 of shreds in the space downstream of the first refuser 2. The quantity of tobacco shreds in the intermediate supply 4 is measured by a photosensitive detector 6 which is connected with a servomechanism for moving the first refuser 2 nearer to or further away from the carding of the drum 1. The purpose of the detector 6 is to insure that the quantity of tobacco shreds in the intermediate supply 4 remains within a predetermined range. A rapidly driven picker roller 7 is located downstream of the second refuser 3 to expel the shreds of the twice-equalized layer from the carding of the drum 1 and to direct the shreds against protuberances provided on the periphery of a winnower 8 which is driven to rotate in a counterclockwise direction, as viewed in FIG. 3. The winnower 8 serves to classify the tobacco shreds according to their size and weight. The heavier tobacco particles (such as fragments of stem or ribs) are propelled into an intercepting container 11 having in its bottom zone a rotating feed screw 10 serving to evacuate the heavier particles into a receptacle 11*a*. A pneumatic conveyor 20 is provided to evacuate the heavier tobacco particles from the receptacle 11*a*. The lighter tobacco particles are showered by the winnower 8 onto the upper stretch of an endless band 9 which accumulates a wide sliver or carpet 12 of satisfactory shreds and showers the leading end of the carpet 12 into a channel 14. The showered particles accumulate on the upper stretch of an endless foraminous belt 16 to form the aforementioned narrow stream 13 which is transported in a direction at right angles to the plane of FIG. 3. The upper stretch of the belt 16 slides along a perforated plate 17 constituting the top wall of a suction chamber 18 which insures that the shreds which form the narrow stream 13 share the lengthwise movement of the belt 16.

Referring now to FIG. 2, the upper stretch of the belt 16 delivers the tobacco stream 13 into the circumferential groove (not shown) of a suction wheel 19 which rotates with reference to a suction chamber serving to retain the tobacco shreds in the groove at least during travel toward an adjustable trimming device 21 which removes the surplus and thus converts the stream 13 into a filler rod 22. The bottom wall of the groove in the periphery of the suction wheel 19 is foraminous to permit retention of tobacco shreds by suction.

A tongue 23 expels the filler rod 22 from the groove of the suction wheel 19 and causes the filler rod to move along the underside of the lower stretch of an endless steel belt 24*a* which is perforated and the lower stretch of which travels below a stationary suction chamber 24. The filler rod 22 then enters the wrapping station of the machine ZM to be provided with a tubular wrapper consisting of cigarette paper. The cigarette paper is stored on a bobbin 27 in the form of a web 26 and is caused to pass through a printing mechanism 28 which provides longitudinally spaced portions of the web with indicia representing the name of the brand, the name of the manufacturer and/or other printed matter. The web 26 then enters the wrapping station by moving below the tongue 23 and onto the upper stretch of a belt 29 which also transports the filler rod 22. The web 26 is draped around the filler rod 22 by a wrapping mechanism 31 which causes one marginal portion of the web to extend substantially tangentially of the wrapped filler rod so as to advance along a conventional paster 32 which provides such marginal portion with a strip of adhesive. The thus coated marginal portion is folded over the other marginal portion and the adhesive between the overlapping marginal portions is heated by a sealer plate 33 which causes the adhesive to set. The filler rod 22 is thus converted into a continuous wrapped cigarette rod 34 which is severed at regular intervals by a severing device 36 known as cutoff so as to yield a single file of plain cigarettes which are propelled into successive flutes of a driven transfer drum 38 by means of a rotary accelerating cam 37. Unsatisfactory portions 34' of the wrapped cigarette rod are caused to enter a collecting receptacle 40. A pneumatic conveyor 42 is provided to evacuate tobacco from the receptacle 40. The wrapped cigarette rod is usually unsatisfactory during the acceleration of machine ZM from zero speed, and those portions of the rod which are produced during acceleration are caused to enter the receptacle 40 in order to prevent such portions from being converted into plain cigarettes and from entering the filter cigarette making machine FA. The unsatisfactory quality of the wrapped rod which is produced immediately after the machine is started is attributable to irregular feed of tobacco shreds and to unsatisfactory seam between the overlapping marginal portions of the wrapper.

The tobacco dust which is present between the tobacco shreds and enters the distributor and the rod forming parts of the cigarette rod making machine ZM is sucked up by suitable fans (not shown) and is separated from air by filter means 43 (FIG. 3) to be collected in a receptacle 44. The thus collected tobacco dust is evacuated by way of a pneumatic conveyor 45.

When the supply of cigarette paper web 26 on the bobbin 27 is nearly exhausted, the trailing end of the web 26 is spliced to the leading end of a fresh web 26a coming from a fresh bobbin 27a. The exact details of the splicing mechanism which is shown in FIG. 2, as at 26A, form no part of the present invention. A photosensitive detector 39 scans the web 26 downstream of the splicing mechanism 26A to detect the splices between the expiring web and a fresh web and to transmit signals to an ejector 41 which expels defective or presumably defective plain cigarettes into a receptacle 46 located downstream of the cutoff 36. The signals from the detector 39 to the ejector 41 are delayed to insure that the ejector 41 expels into the receptacle 46 that plain cigarette or those plain cigarettes whose wrapper or wrappers contain portions of the splice. The ejector 41 preferably comprises a nozzle which is connected with a source of compressed air in response to signals from the detector 39 to thereby direct the air stream against plain cigarettes travelling from the cutoff 36 toward the transfer drum 38. The ejector 41 is also activated when the machine ZM is started so as to insure that the plain cigarettes which are likely to be defective are invariably prevented from entering the filter cigarette making machine FA. In order to make sure that no defective plain cigarettes will enter the machine FA, the signal from the detector 39 or the signal which is transmitted in response to starting of the machine ZM

is caused to maintain the ejector **41** in operation for a certain interval of time which is long enough to insure expulsion of all defective plain cigarettes.

The measuring divices or detectors MZ2 and MZ11–MZ15 of FIG. 1 are distributed in the machine ZM of FIGS. 2 and 3 as follows:

The detector MZ2 is installed at the hopper **15** (inlet EGZ) which controls the transfer of tobacco shreds from the pneumatic conveyor **5** into the magazine **1a** of the distributor shown in FIG. **3.** The detector MZ11 is installed in or on the receptacle **44** (secondary outlet ASZ11) for tobacco dust (see the lower right-hand portion of FIG. 3). The detector MZ12 is installed in the receptacle **11***a* (secondary outlet ASZ12) which receives heavier tobacco particles from the container **11** by way of the feed screw **10.** The detector MZ13 is installed in or on the receptacle **40** (secondary outlet ASZ13) for collection of unsatisfactory portions **34'** of the wrapped cigarette rod. The detector MZ14 is installed in the region of the ejector **41** (secondary outlet ASZ14) to detect the plain cigarettes which enter or leave the receptacle **46.** The detector MZ15 is adjacent to the transfer drum **38** (main outlet AGZ) to detect the satisfactory plain cigarettes Z which are to be introduced into the filter cigarette making machine FA. The details of the measuring devices or detectors MZ2 and MZ11–MZ15 are respectively illustrated in FIGS. **6, 10–13** and **7.**

FIG. **4** illustrates the details of the filter cigarette making machine FA. This machine is of the type shown as MAX and is produced by Hauni-Werke of Hamburg-Bergedorf, Western Germany. The transfer drum **38** is designed to convert the single file of satisfactory plain cigarettes Z which leave the cigarette rod making machine ZM into two rows wherein the plain cigarettes travel sideways. The two rows are transferred into the flutes of two aligning conveyors **52** (only one shown in FIG. **4**) which rotate at different speeds or have different diameters in order to insure that each thereof can deliver a plain cigarette into each flute of an assembly conveyor **53.** Thus, each flute of the assembly conveyor **53** carries two coaxial plain cigarettes which are spaced from each other to provide a gap having a width which exceeds the length of a filter plug of double unit length.

The filter cigarette machine FA further comprises a magazine **54** which serves for reception and temporary storage of filter rod sections **334** (see FIG. **15**) of six times unit length. Successive filter rod sections are evacuated from the magazine **54** by way of a chute **54***a* to enter the flutes of a so-called cutting conveyor **56** cooperating with two coaxial axially spaced rotary disk-shaped cutters **57** (only one shown) serving to subdivide successive filter rod sections of six times unit length into filter rod sections or filter plugs of double unit length. Such filter plugs are still coaxial with each other during transfer into the flutes of three staggering conveyors **58** (only one shown) which move two of three coaxial filter plugs sideways with reference to the third plug so as to stagger the filter plugs in the circumferential direction for introduction into successive flutes of a shuffling conveyor **59.** The latter cooperates with stationary cams **60** to align the filter plugs prior to introduction into successive flutes of an intermediate conveyor **61** which delivers the filter plugs into successive flutes of an accelerating conveyor **62.** The latter introduces filter plugs into the gaps between successive pairs of coaxial plain cigarettes in the flutes of the assembly conveyor **53.** Thus, each flute of the conveyor **53** then contains a group consisting of three coaxial rod-shaped articles including a filter plug of double unit length and two plain cigarettes which flank the respective filter plug. Such groups re transported along one or more stationary cams **53***a* which cause the plain cigarettes each group to move toward the corresponding filter plug so that the ends of each filter plug abut against the inner ends of the respective plain cigarettes before the groups enter the flutes of a transfer conveyor **63.** The latter moves the groups past a suction drum **69** which provides each group with an adhesive-coated uniting band. The uniting bands are obtained in response to severing of a tape or web **65** consisting of paper or cork and being drawn from a bobbin **64** by two advancing rolls **66, 67** to thereupon pass through a conventional paster **68** located upstream of the aforementioned suction drum **69.** The paster **68** has a roller-shaped applicator which coats the underside of the tape **65** with a film of adhesive and the thus coated tape then reaches the periphery of the suction drum **69** to be severed by the knives of a rotary cutting drum **71.** The thus obtained uniting bands are caused to adhere to successive groups in the flutes of the transfer conveyor **63** in such a way that each uniting band adheres to the respective filter plug and to the inner end portions of the respective plain cigarettes.

The transfer conveyor **63** transfers the thus obtained assemblies of groups and uniting bands onto a rotary rolling or wrapping conveyor **72** which cooperates with a stationary or movable rolling member **73** to convolute each uniting band around the respective filter plug and around the inner end portions of the respective plain cigarettes in order to form a series of filter cigarettes of double unit length. The conversion of assemblies into filter cigarettes of double unit length is completed in the elongated gap between the conveyor **72** and rolling member **73.**

The filter cigarettes of double unit length are thereupon transferred onto a testing conveyor **74** which is provided with or cooperates with conventional testing means to detect the presence of defective filter cigarettes. The satisfactory filter cigarettes of double unit length are transferred onto a cutting conveyor **76** cooperating with a rotary disk-shaped cutter **75** to sever the filter cigarette of double unit length midway between its ends and to thus form two rows of filter cigarettes of unit length. The filter cigarettes of one row are inverted end-for-end by an inverting conveyor **77** so that the filter plugs of all cigarettes face in the same direction. The arrangement is preferably such that the conveyor **77** places the inverted filter cigarettes into the gaps between the filter cigarettes of the other row so that the filter cigarettes which leave the inverting conveyor **77** form a single row. Such filter cigarettes are then transported by an intermediate conveyor **78** which delivers them onto a second testing conveyor **79** cooperating with or having means for detecting defective filter cigarettes of unit length. The satisfactory filter cigarettes FZ of unit length are transferred onto a further conveyor **81** which delivers them onto the upper stretch of an endless belt or chain conveyor **82** serving to deliver satisfactory filter cigarettes FZ into the packing machine PM.

The defective filter cigarettes FZ' (see FIG. **14**) are segregated from satisfactory filter cigarettes FZ by an ejector nozzle **83** which can discharge streams of com-

pressed air to propel defective filter cigarettes into a receptacle **84.** In the illustrated embodiment, the ejector nozzle **83** is mounted to expel defective filter cigarettes FZ' from the flutes of the conveyor **81,** i.e., downstream of the second testing conveyor **79.** The ejector nozzle **83** is operatively connected with the testing conveyor **74** so as to also expel from the flutes of the conveyor **81** those filter cigarettes of unit length which are obtained in response to severing of defective filter cigarettes of double unit length. Thus, the receptacle **84** collects all such filter cigarettes which were found to be defective, either during transport with the testing conveyor **74** or during transport with the testing conveyor **79.**

The measuring devices or detectors MF2, MF11 and MF12 are distributed as follows:

The detector MF2 is adjacent to the transfer drum **38** (inlet EGF); the detector MF11 is adjacent to the ejector nozzle **83** and receptacle **84** (secondary outlet ASF); and the detector MF12 is adjacent to the conveyor **82** (main outlet AGF). As mentioned before, the detector MF2 may constitute the detector MZ15 or it may be provided in addition to the detector MZ15.

The details of the detectors MF2, MF11 and MF12 are respectively shown in FIGS. **7, 14** and **8.**

Certain details of the packing machine PM are shown in FIG. **5.** This machine is of the type known as KDW and is produced by Hauni-Werke of Hamburg-Bergedorf, Western Germany. The conveyor **82** of the filter cigarette making machine FA delivers satisfactory filter cigarettes FZ of unit length into a magazine **101** wherein the filter cigarettes enter three vertical ducts to form in each duct a single stack of superimposed cigarettes. A suitable pusher (not shown) is caused to periodically expel from the lower end of the magazine **101** blocks or arrays containing, for example, 20 filter cigarettes in the formation which are customary in cigarette packs. Thus, each such array will normally consist of two outer layers of seven filter cigarettes each and a medium layer of six cigarettes which are staggered with reference to the filter cigarettes of the outer layers. The blocks are transported along a path **102** in the direction indicated by the arrow **103** to advance past a first wrapping or envelope-forming apparatus **104** which provides each block with an inner envelope consisting, for example, of tinfoil. The apparatus **104** comprises a severing device which cuts tinfoil blanks from a roll of tinfoil or a magazine which contains a supply of prefabricated tinfoil blanks. The blanks are moved across the inlets of suitable mouthpieces (not shown) through which the blocks of filter cigarettes pass whereby the blanks are partially draped around the respective blocks. The blocks then advance through a folding unit **106** which continues the conversion of tinfoil blanks into inner envelopes. In the next step, the blocks advance through a second wrapping or envelope-forming apparatus **107** which provides each block with a second or outer envelope consisting of paper or cardboard. The apparatus **107** may include a magazine for a stack of suitably imprinted paper or cardboard blanks which are withdrawn by means of one or more suction heads and are introduced into the path of successive blocks to be draped around the respective inner envelopes of tinfoil. The apparatus **107** further comprises a paste which coats selected portions of paper or cardboard blanks with films of adhesive and one or more rollers which place the thus coated outer blanks into the path of successive blocks of 20 filter cigarettes each. The blocks are thereupon caused to pass through a further folding unit **108** which continues the conversion of blanks into envelopes. A set of brushes **109** is caused to move the adhesive-coated portions of outer envelopes into contact with the uncoated portions of such envelopes to further advance the transformation of blanks into envelopes. The partially finished cigarette packs then enter a labelling apparatus **111** which applies to the head end of each pack a revenue label whereby such label also serves to prevent opening of folds and tucks at the respective end of the pack. The labelling apparatus **111** comprises a magazine for a stack of revenue labels which are withdrawn by means of one or more suction heads or suction drums and are coated with adhesive prior to being applied to the head ends of the packs, preferably by resorting to suction drums. The packs then enter the compartments or chambers of a carriage **112** which partially completes the closing of the other ends of successive packs in a manner not forming part of the invention and introduces the nearly finished packs into the lower end of a stacking tower or magazine **113.** The magazine **113** is preferably heated to cause rapid setting of adhesive on the outer envelopes of the packs. The stack of packs in the magazine **113** is lifted periodically to permit insertion of a fresh pack into the lower end of the magazine. The uppermost packs re withdrawn from the magazine **113** to be delivered onto the upper stretch of a conveyor **114.** Certain folding operations upon the inner and/or outer envelopes of the packs can be carried out during introduction of packs into and/or during transport of packs upwardly through the magazine **113.** The carriage **112** cooperates with a suitable lever, not shown, which causes the folding of certain flaps or tucks on the inner and/or outer envelopes during transport of partly finished packs in the aforementioned compartments. The manner in which one or more portions of the magazine **113** are heated to insure rapid setting of adhesive which is applied in the apparatus **107** forms no part of the invention.

It is preferred to construct the packing machine PM in such a way that it comprises means for withdrawing from the magazine **101** blocks or arrays of filter cigarettes which are transported along two discrete paths, namely, along the path **102** and a similar second path, not shown. The machine PM then comprises two each of the apparatus and units numbered **104, 106–109** and **111–113** so as to produce pairs of finished packs which are delivered onto the upper stretch of the conveyor **114.**

The measuring devices or detectors MP2, MP11 and MP12 are distributed in the packing machine PM of FIG. **5** as follows:

The detector MP2 is adjacent to the conveyor **82** (inlet EGP) to detect the satisfactory filter cigarettes FZ of unit length which are caused to enter the magazine **101.** As mentioned before, the detector MP2 may be provided in addition to or it constitutes the detector MF12 of the filter cigarette making machine FA.

The detector MP11 is adjacent to the secondary outlet or outlets ASP here shown as being located in the region of the carriage **112.** When the aforementioned lever fails to operate properly in that it cannot expel a partly finished pack from the corresponding compartment of the carriage **112** or mutilates the pack, the machine PM produces a signal or comes to a halt so that

the attendant can remove the defective pack before it enters the magazine **113** or before it can reach the conveyor **114**. The detector **MP12** is adjacent to the conveyor **114** (main outlet AGP).

The details of the detector **MP12** are shown in FIG. **9**.

Referring to FIG. **6**, there is shown the measuring device or detector **MZ2** which determines the quantities of tobacco shreds entering the magazine **1a** of the distributor (FIG. **3**) in the cigarette rod making machine ZM. The detector **MZ2** comprises a high-precision weighing device **120** having an output **121** for emission of electric signals. The weighing device **120** is mounted below the hopper **15** which comprises a housing **122** serving to receive tobacco shreds from the pneumatic conveyor **5**. The reference character **5'** denotes a suction conduit which communicates with the interior of the housing **122**. A flap or gate **123** is hingedly connected to a side wall of the housing **122** and can be moved to open position to permit gravitational descent of tobacco shreds into a tray **127** of the weighing device **120**. The gate **123** is moved to open position in response to a signal from a scanning device **124** mounted in the interior of the housing **122** and serving to furnish signals when the housing **122** accumulates a predetermined quantity of tobacco shreds. The scanning device **124** then deenergizes an electromagnet **126** which can move the gate **123** between open and closed positions. When energized, the electromagnet **126** maintains the gate **123** in the closed position.

The weighing device **120** includes means for determining the exact weight of the mass of shredded tobacco in the tray **127** and for producing signals which are indicative of the thus determined weight. The weighing operation takes up a certain interval of time and the signals are transmitted, with a delay determined by a time-lag device **128**, to the input *a* of the totalizer SZ2 of FIG. **1**. The time-lag device **128** is connected with the input *a* of the weighing device **120**.

When the shredded tobacco which was admitted by way of the pneumatic conveyor **5** leaves the housing **122**, the scanning device **124** energizes the electromagnet **126** which returns the gate **123** to the closed position. The scanning device **124** is further connected with the time-lag device **128**. The latter responds to the signal from the scanning device **124** to energize an electromagnet **129** with appropriate delay whereby the electromagnet **129** causes its armature **131** to temporarily disengage a locking pawl **132** from a tooth **136** on a disk which is connected with a shaft **133** for the tray **127**. When filled with shreds, the tray **127** is mounted on the shaft **133** in unbalanced position so that it tends to pivot in a counterclockwise direction, as viewed in FIG. **6**, and to dump its contents into a chute **134** which delivers the shreds into the magazine **1a** of the distributor shown in FIG. **3**. The distance between the center of gravity of the tray **127** and the axis of the shaft **133** is selected in such a way that the tray **127** automatically reassumes the illustrated tobacco-receiving position when it completes the discharge of its contents into the chute **134**. The locking pawl **132** then reengages the tooth **136** and holds the tray **127** against pivotal movement during admission of shredded tobacco in response to opening of the gate **123**. The directions in which the tray **127** can pivot to and from the illustrated tobacco-receiving position are indicated by the double-headed arrow **137**.

The measuring device or detector **MF2** (**MZ15**) at the inlet EGF of the filter cigarette making machine FA (outlet AGZ of the cigarette rod making machine ZM) is shown in FIG. **7**. This detector comprises a photosensitive scanning device having a housing **141** for a light source **142** and a mirror or an analogous optical element **143** which permits a portion of light issuing from the source **142** to impinge on a lens serving to focus the light on the periphery of the transfer drum **38**. When the thus focussed light is reflected on a passing plain cigarette Z in a flute **38***a* of the drum **38**, it is caused to impinge on the light-sensitive surface of a photosensitive element **144**. The element **144** then transmits a signal to the input *a* of an AND-gate **146** whose output c is connected with the input a of the totalizer SF2 (SZ15). The detector **MF2** further comprises a so-called contactless initiator **148** having a coil **147** which is connected with the input *b* of the AND gate **146**. The coil **147** transmits signals at intervals determined by a timer disk **149** which is driven in synchronism with the transfer drum **38** and carries a set of equidistant protuberances **149***a* in the form of permanent magnets which travel past the coil **147** and cause the latter to transmit signals to the input *b* of the AND-gate **146**. In a manner which is well known from the art of logical circuits, the output *c* of the AND-gate transmits a signal to the totalizer SF2 only when its input *b* receives a signal from the coil **147** simultaneously with transmission of a signal to the input *a*, i.e., in response to detection of a satisfactory cigarettes Z which are caused to enter the filter cigarette making machine FA, namely, the flutes of the aligning drums **52** shown in FIG. **4**. The transfer drum **38** constitutes a direct connection between the machines ZM and FA; therefore, the detector **MZ15** can be omitted because the number of satisfactory plain cigarettes Z which leave the machine ZM by way of the main outlet AGZ is identical with the number of plain cigarettes entering the machine FA by way of the inlet EGF.

The measuring detector **MP2** (**MF12**) of FIG. **8** is very similar to the detector **MF2** of FIG. **7**. This detector serves to produce signals in response to detection of each satisfactory filter cigarette FZ which leaves the machine FA. As shown in FIG. **8**, the conveyor **82** is an endless chain conveyor whose links are provided with sockets for filter cigarettes FZ. Such cigarettes move past a detecting station which accommodates a photosensitive scanning device having a housing **151**, a light source **152**, a partially light-transmitting optical element **153**, a lens, and a photosensitive element **154** connected to the input *a* of an AND-gate **156**. The output *c* of the AND-gate **156** is connected with the input *a* of the totalizer SP2 and the input *b* of this gate is connected with a coil **158** forming part of a contactless initiator **157** further including a timer disk **159** which is driven in synchronism with the chain conveyor **82** and carries a set of equidistant protuberances **159***a*. These protuberances cause the coil **158** to produce signals at regular intervals, and the AND-gate **156** transmits to the totalizer SP2 a signal only when its input *b* receives a signal simultaneously with a signal which is generated by the element **154** and is transmitted to the input *a*. Thus, the number of signals which are transmitted to the totalizer SP2 corresponds to the number of satisfactory filter cigarettes FZ which enter the packing machine PM by way of the inlet EGP. Since the chain conveyor **82** constitutes a direct connection between the

machines FA and PM, the detector MF12 or MP2 can be omitted.

FIG. 9 illustrates the details of the measuring device or detector MP12 which is mounted at the outlet AGP of the packing machine PM. This detector is adjacent to the endless conveyor 114 for satisfactory packs P of filter cigarettes FZ. The detector MP12 comprises a microswitch 161 which is mounted on a transfer member 163 reciprocable in directions indicated by the double-headed arrow 162 and serving to transfer the uppermost pack P of the stack in the magazine or turret 113 onto the upper stretch of the conveyor 114. The movable contact 161*a* of the microswitch 161 strikes against the uppermost pack P whenever the transfer member 163 performs a rightward stroke whereby the microswitch 161 transmits a signal to the input *a* of the totalizer SP12. The number of such signals equals the number of satisfactory packs P which leave the machine PM.

Referring to FIG. 10, there is shown the measuring device or detector MZ11 which is mounted in the cigarette rod making machine ZM to determine the weight of tobacco dust which accumulates in the receptacle 44 and is intermittently evacuated by the pneumatic conveyor 45. This detector is similar to the detector MZ2 of FIG. 6. The receptacle 44 receives tobacco dust from a conventional filter 43 which is connected with a vibrator 168 and comprises a set of filtering hoses 167. The air stream which contains particles of tobacco dust is admitted by way of a pipe 169 and the dust-free air stream is evacuated by way of the pipe 169*a*. The receptacle 44 resembles a funnel and collects dust which descends from the filter 43 in response to the shaking action of the vibrator 168.

One side wall 172 of the receptacle 44 supports a movably mounted scanning device 173 which is connected with an electromagnet 174 for a pivotable gate 176 in another side wall of the receptacle 44. When the scanning device 173 is caused to assume a position which is indicative of the fact that the receptacle 44 contains a predetermined quantity of tobacco dust, it deenergizes the electromagnet 174 which enables or causes the gate 176 to assume an open position so that the accumulated tobacco dust can descend into the tray 177 of a precision weighing device 178 corresponding in principle to the weighing device 120 of FIG. 6. The outlet 181 of the weighing device 178 is connected with the input *a* of the totalizer SZ11. When the receptacle 44 is empty, the scanning device 173 produces a signal which causes energization of the electromagnet 174 to thereby effect a return movement of the gate 176 to the illustrated closed position. The first signal from the scanning device 173 is delayed by a time-lag device 179 which is connected with the input *a* of the weighing device 178 and with an electromagnet 191 for a flap or valve 189 in the pneumatic conveyor 45. The output 181 of the weighing device 178 transmits to the totalizer SZ11 a signal in response to transmission of a signal to the input *a* from the time-lag device 179. The signal to *a* is delayed to such an extent that the weighing device 178 can complete the weighing operation so that the signal transmitted by way of the output 181 is representative of the weight of tobacco dust in the tray 177.

The time-lag device 179 is further connected with an electromagnet 182 which is energized simultaneously with transmission of a signal to the input *a* of the weighing device 178 so that its armature 183 causes disengagement of a locking pawl 184 from the tooth 193 of a disk on the shaft 186 for the tray 17. The dust-containing tray 177 is then caused to pivot in a counterclockwise direction, as viewed in FIG. 10, to dump its contents into a chute 187 serving to admit the dust into the inlet of the pneumatic conveyor 45. The flap 189 is caused by the time-lag device 179 to open (by way of the electromagnet 191) when the tray 177 dumps its contents into the chute 187 so that the dust is caused to pass through the pneumatic conveyor 45 and is delivered to a further processing station, for example, into an apparatus for the production of sheets or webs consisting of reconstituted tobacco. The tray 177 automatically returns to the illustrated normal position to permit the locking pawl 184 to reengage the tooth 193 as soon as the contents of the tray are transferred into the chute 187. The directions of pivotal movement of the tray 177 are indicated by a double-headed arrow 192. The reasons for automatic return movement of the tray 177 to the illustrated position are the same as explained in connection with the tray 127 of FIG. 6.

FIG. 11 illustrates the details of the measuring device or detector MZ12 which measures the quantities of heavier tobacco particles during transfer of such particles from the receptacle 11*a* into the pneumatic conveyor 20. As mentioned before, the receptacle 11*a* receives particles from the receptacle 11 of FIG. 3 through the intermediary of the feed screw 10. The lower part of the receptacle 11*a* forms a funnel having a side wall 202 which supports a a scanning device 203 arranged to change its position in response to accumulation of heavy tobacco particles in the receptacle 11*a*. When the receptacle 11*a* accumulates a predetermined quantity of particles, the scanning device 203 deenergizes an electromagnet 204 which opens a pivotable gate 206 to permit gravitational descent of accumulated heavier particles into the tray 207 of a precision weighing device 208 having an output 211 and an input *a*. When the receptacle 11*a* is empty, the scanning device 203 produces a second signal which is delayed by a time-lag device 209 and is transmitted to the input *a* so that the output 211 of the weighing device 208 transmits a signal to the input *a* of the totalizer SZ12. The second signal from the scanning device 203 also serves to reenergize the electromagnet 204 which returns the gate 206 to the illustrated closed position so that the receptacle 11*a* can accumulate a fresh supply of heavy tobacco particles. The time-lag device 209 further causes energization of an electromagnet 212 having an armature 213 for disengaging a locking pawl 214 which normally engages a tooth 233 on a disk secured to the shaft 216 for the tray 207 of the weighing device 208. When the pawl 214 is disengaged from the tooth 223, the tray 207 pivots in a counterclockwise direction, as viewed in FIG. 11, and dumps its contents into a chute 217 for delivery into the pneumatic conveyor 20. The tray 207 automatically reassumes the illustrated position and causes the pawl 214 to reengage the tooth 223 when its contents descend into the chute 217. The pneumatic conveyor 20 contains a valve 219 which is opened by an electromagnet 221 when the latter is energized by the time-lag device 209 simultaneously with energization of the electromagnet 212. The conveyor 20 then transports the heavier particles to a further processing station. The arrow 222 indicates the directions of pivotal movement of the tray 207. The reasons

for automatic dumping of heavier particles in response to energization of the electromagnet **212** and for automatic return of empty tray **207** to the position of FIG. **11** are the same as explained in connection with the tray **127** of FIG. **6.**

The measuring device or detector MZ13 (FIG. **12**) at the outlet ASZ13 of the cigarette rod making machine ZM is practically identical with the detector MZ12 of FIG. **11** excepting that the receptacle **40** accumulates unsatisfactory portions **34'** of the wrapped cigarette rod. The lower part of the receptacle **40** constitutes a funnel having a side wall **232** which supports a movable scanning device **233** corresponding to the scanning device **203** of FIG. **11.** The pneumatic conveyor **42** contains a valve **249** movable to open position by an electromagnet **251** which is controlled by a time-lag device **239.** It will be noted that all such parts of the detector MZ13 which are identical with or clearly analogous to the corresponding parts of the detector MZ12 shown in FIG. **11** are denoted by similar reference characters plus **30.**

When the funnel of the receptacle **40** accumulates a certain quantity of unsatisfactory wrapped rod material, the device **233** deenergizes the electromagnet **234** which opens the gate **236** so that the material can descend into the tray **237** of the weighing device **238.** When the funnel of the receptacle **40** is empty, the device **233** transmits a second signal which reenergizes the electromagnet **234** to return the gate **236** to the illustrated closed position. The second signal is delayed by the device **239** for transmission to the input *a* of the weighing device **238** and for energization of the electromagnets **242** and **251.** The electromagnet **242** has an armature **243** which disengages the locking pawl **244** from the tooth **253** so that the filled tray **237** pivots about the axis of the shaft **246** in a counterclockwise direction to dump its contents into the chute **247.** The empty tray **237** returns to the illustrated position and causes the pawl **244** to reengage the tooth **253.** The output **241** of the weighing device **238** transmits a signal to the input *a* of the totalizer SZ13 in response to reception of a signal at the input *a* (from the time-lag device **239**). The electromagnet **251** is energized simultaneously with the electromagnet **242** and opens the valve **249** so that the pneumatic conveyor **42** can remove the material which is supplied thereto by the chute **247.**

The cigarette rod making machine ZM is preferably provided with a device which automatically breaks the defective wrapped cigarette rod **34'** so that the funnel of the receptacle **40** accumulates shredded tobacco.

FIG. **13** illustrates the details of the measuring device or detector MZ14 at the outlet ASZ14 of the cigarette rod making machine ZM. This detector is adjacent to the ejector **41** and has a light source **262** located opposite a photosensitive element **263.** The numeral **261** denotes a guide channel wherein satisfactory plain cigarettes Z and unsatisfactory plain cigarettes Z' advance past the ejector **41** so that the cigarettes Z move into the range of the accelerating cam **37** to be introduced into the flutes **38***a* of the transfer drum **38.** A defective plain cigarette Z' is expelled from the channel **261** by a stream of compressed air issuing from the ejector **41** and descends in a chute of the receptacle **46.** The descending defective cigarette Z' interrupts the light beam issuing from the source **262** whereby the element **263** transmits a signal to the input *a* of the totalizer SZ14. The defective cigarettes Z' can constitute those cigarettes which are produced during starting of the machine ZM and/or those cigarettes whose wrappers include portions of splices between an expiring web and a fresh web of cigarette paper (see the webs **26** and **26***a* of FIG. **2**).

Referring to FIG. **14,** the measuring device or detector MF11 at the secondary outlet ASF of the filter cigarette machine FA comprises a light source **272** and a photosensitive element **273** which is impinged upon by light issuing from the source **272** and produces a signal for transmission to the input *a* of the totalizer SF11 when the light beam is interrupted by a defective filter cigarette FZ'. The conveyor **81** (see also FIG. **4**) is a suction drum having flutes which transport filter cigarettes FZ past the ejector nozzle **83** which includes a source of compressed air connected with ports leading to the flute at the ejecting station in response to signals from the testing conveyor **74** or **79.** The descending defective filter cigarette FZ' interrupts the light beam issuing from the source **272** and causes the photosensitive element **273** to transmit a signal to the totalizer SF11.

The operation of the evaluating apparatus for the efficiency of the production line of FIG. **1** is as follows:

Shredded tobacco which is admitted into the distributor shown in FIG. **3** by way of the structures shown in FIG. **6** is processed to form the filler rod **22** and thereupon the wrapped cigarette rod **34** which is severed by the cutoff **36** to yield a file of plain cigarettes Z. The detector MZ2 weighs successive batches of shredded tobacco which are admitted at spaced intervals into the magazine **1***a* of the distributor and transmits appropriate signals to the input *a* of the totalizer SZ2. The sum of such signals is indicative of the total quantity of tobacco which is admitted to the production line by way of the inlet EGZ of the cigarette rod making machine ZM.

The satisfactory plain cigarettes Z enter the inlet EGF of the filter rod making machine FA and are combined with filter plugs to form groups, assemblies, filter cigarettes of double unit length and filter cigarettes FZ of unit length in a manner as described in connection with FIG. **4.** The satisfactory filter cigarettes FZ of unit length enter the magazine **101** of the packing machine PM and are provided with inner and outer envelopes and revenue labels in a manner as described in connection with FIG. **5.** The satisfactory packs P are transferred onto the conveyor **114** for transport into a carton filing machine, into a baling machine or into storage.

When the production line is in operation, certain quantities of tobacco leave the machines ZM, FA and PM by way of the secondary outlets ASZ11–ASZ14, ASF and ASP. The outlet ASZ11 discharges tobacco dust in a manner as described in connection with FIG. **10,** the outlet ASZ12 discharges heavy tobacco particles in a manner as described in connection with FIG. **12,** the outlet ASZ13 discharges tobacco shreds which are recovered from unsatisfactory wrapped cigarette rod portions **34'** (see FIG. **12**), the outlet ASZ14 discharges defective plain cigarettes Z' in a manner as shown in FIG. **13,** the outlet ASF discharges defective filter cigarettes FZ' in a manner as shown in FIG. **14,** and the outlet ASP serves for manual removal of defective packs in a manner as described in connection with FIG. **5.** The removal or evacuation of tobacco at the

just described secondary outlets reduces the efficiency of the production line, i.e., the tobacco which is removed or evacuated at the secondary outlets constitutes the difference between tobacco which leaves the production line at the outlet AGP in satisfactory cigarette packs P and tobacco which is admitted into the magazine 1a of the distributor in the machine ZM by way of the inlet EGZ. In other words, the number of filter cigarettes FZ or packs P which leave the production line on the conveyor **114** does not correspond to the theoretical number which can be arrived at by dividing the total weight of tobacco admitted at EGZ with a numerical value representing the average weight of the tobacco filler in a satisfactory filter cigarette FZ or with a numerical value representing the average weight of tobacco in a satisfactory pack P. The reasons for losses in tobacco are often due to the nature of treatment, for example, to the manner or treating tobacco which is admitted by way of the pneumatic conveyor **5** to enter the distributor of the machine ZM. For example, if the quantity of heavier particles or tobacco dust in, or the moisture content of, tobacco shreds entering the magazine **1a** deviates from a standard quantity or content, such deviations will result in an increase or decrease of the output of satisfactory packs P. Thus, it is clear that, if the tobacco which enters the magazine **1a** contains a relatively high percentage of ribs and stem, the percentage of heavier particles which are evacuated by the pneumatic conveyor **20** of FIGS. **2** and **11** is higher and the number of satisfactory filter cigarettes FZ leaving the production line on the conveyor **114** and containing the satisfactory percentage of tobacco admitted at **5** is less than when the percentage of ribs and stem is relatively low. Certain other factors which affect the output of the production line are much less predictable; for example, even a very careful separation of heavier particles in a manner as shown in FIG. **2** cannot prevent certain heavier particles from entering the carpet **12** on the band **9** of the cigarette rod making machine ZM shown in FIG. **2.** The heavier particles are likely to cause the formation of holes in the web **26** and such defects are detected on the conveyor **74** or **79** of FIG. **4** and result in a greater number of defective filter cigarettes FZ′ which are segregated in a manner as illustrated in FIG. **14.**

The quantities of tobacco which leave the production line by way of the secondary outlets ASZ11–ASZ14, ASF and ASP are measured by the respective detectors MZ11–MZ14, MF11 and MP11, and the signals from such detectors to the inputs *a* of the totalizers SZ11–SZ14, SF11 and SP11 are indicative of the measured quantities. The signals from these totalizers are transmitted to and stored in the respective multipliers and dividers. The person in charge can cause the conductor LRT to transmit a signal to the inputs *u* of the multipliers and dividers. The signal to the input *u* of the multiplier XP12 causes the latter to transmit a signal to the input a of the divider QP′12. Such signal is indicative of the number of filter cigarettes which are contained in defective packs removed by way of the outlet or outlets ASP of the packing machine PM. The output signal from the multiplier XP12 is indicative of the total weight of tobacco in the cigarettes of removed defective packs because the input *b* of the multiplier XP12 is connected with the source D of reference signals representing the average quantity of tobacco in a filter cigarette. The same holds true for the multipliers XZ14 and XF11 which are also connected with the reference signal source D and with the totalizers SZ14 and SF11 serving to transmit signals indicating the number of defective cigarettes Z′ and FZ′.

The dividers receive signals from the conductor LRT to furnish signals which are indicative of the ratios of introduced tobacco to tobacco which is evacuated at the respective secondary outlets, and such signals are recorded and indicated by the recording devices AZ11 to AP′12. The recording devices are preferably designed in such a way that they furnish readily observable readings indicating the respective ratios. The transmission of signals to the recording devices preferably takes place when the production line is idle, for example, upon completion of a shift or upon elapse of another predetermined period of time. Thus, the computations should be completed when the tobacco which was admitted at the inlet EGZ is fully consumed by being evacuated through the outlet AGP in the satisfactory packs P or through the secondary outlets ASZ-11–ASZ14, ASF and ASP.

The dividers QZ11,QZ12, QZ13 produce signals which are immediately indicative of the ratio of the total quantity of tobacco admitted at EGZ to the quantities which are detected by the detectors MZ11–MZ13 at the secondary outlets ASZ11–ASZ13 of the cigarette rod making machine ZM.

The dividers QZ14, QZ15, QF′11, QF′12, QP′11 and QP′12 furnish signals which are indicative of the ratio of the total quantity of tobacco entering at EGZ to the quantities represented by signals from the totalizers SZ14, SZ15, SF11, SF12, SP11 and SP12. The signals from these totalizers are indicative of the quantities which are determined by multiplying the number of withdrawn cigarettes with the factor representing the average quantity of tobacco in a cigarette Z or FZ.

The dividers QF11, QF12, QP11 and QP12 furnish signals which are indicative of the ratio of the number satisfactory cigarettes to the number of unsatisfactory cigarettes and satisfactory packs to unsatisfactory packs. Such signals are thus indicative of the ratio of quantities of tobacco which enter the machine FA or PM to quantities of tobacco which leave these machines.

The just described mode of evaluating the operation of the production line enables the supervisory personnel to obtain accurate figures pertaining to the losses of tobacco in the individual machines of the production line as well as to losses in tobacco for the entire production line. In other words, the evaluating system can furnish figures which indicate that percentage of tobacco entering the machine ZM, FA or PM which is caused to leave the respective machine at the outlet AGZ, AGF or AGP (i.e., in the form of satisfactory commodities) as well as such figures which indicate the ratio of tobacco which is evacuated in the form of ribs, stem, dust, defective plain cigarettes Z′, defective filter cigarettes FZ′ or defective packs to the total quantity of tobacco which is admitted to the machine ZM at the inlet EGZ, to the machine FA at the inlet EGF or to the machine PM at the inlet EGP.

It is clear that the quantities of tobacco which are evacuated with defective plain cigarettes Z′, defective filter cigarettes FZ′ or defective packs can be determined not only by counting the withdrawn defective cigarettes or packs and by thereupon multiplying the obtained numerical values with a factor which repre-

sents the average quantity of tobacco in a cigarette or pack, but also by weighing the cigarettes or packs by means of weighing devices of the type shown in FIGS. **6, 10, 11** and **12.** The results of such measurements are then modified by considering the weight of cigarette paper, filter plugs, envelopes and labels. This mode of evaluating the operation of the machine shown in FIG. **1** can be carried out with an apparatus which is very similar to and in many respects identical with the described apparatus.

The dividers of FIG. **1** can carry out an automatic computing operation by processing signals which indicate the quantity of incoming material and signals which indicate the quantity of outgoing material to furnish signals which indicate the ratio of the admitted and outgoing quantities. For example, the divider QZ11 furnishes to the recording device AZ11 signals which indicate the ratio of the quantity of tobacco admitted at the inlet EGZ to the quantity of tobacco which leaves the machine ZM at the secondary outlet ASZ11. Such ratio can be expressed in percent and enables the supervisory personnel to determine whether or not the percentage of tobacco dust which is evacuated by way of the pneumatic conveyor **45** is within or without a satisfactory range.

The divider QZ12 furnishes signals which are indicative of the ratio of the quantities of tobacco admitted via inlet EGZ to the quantities of tobacco which are evacuated by the conveyor **20** in the form of ribs or portions of stem (outlet ASZ11 of the machine ZM). The nature of tobacco particles which leave the machine ZM by way of the outlets ASZ11 and ASZ12 is such that they cannot or should not be readmitted by way of the inlet EGZ. On the other hand, tobacco which is recovered from defective cigarette rod sections **34'** (outlet ASZ13) and from defective plain cigarettes Z' (outlet ASZ14) is in such condition that it can be reintroduced into the machine ZM. The detectors MZ11 and MZ12 produce signals which are indicative of the quantities of tobacco that is not suited for immediate reintroduction into the machine ZM, and the signals furnished by detectors MZ13, MZ14 are indicative of quantities of such tobacco which is reusable in the production line of FIG. **1.** Thus, the evaluating apparatus can be used to indicate the ratio of introduced tobacco quantities to quantities in satisfactory products, the ratio of introduced quantities to quantities which leave the machine or machines by way of secondary outlets, and the ratio of introduced quantities to quantities of reusable and non-reusable tobacco.

The purpose of the conductor LRT is to avoid continuous calculation of various percentages. This conductor can transmit signals at regular intervals or after the completion of a shift to thereby cause the dividers and certain multipliers to carry out computing operations and to furnish to the recording devices signals which are indicative of the results of such computing operations. As stated before, the evaluating apparatus can employ a computer which can perform a host of calculations at regular or desired intervals and in a predetermined sequence.

Weighing devices are preferred for use in measuring devices or detectors which serve to determine the quantities of commodities in the form of shredded tobacco, tobacco dust, ribs, portions of stem and the like. On the other hand, detectors which can count discrete articles, such as plain or filter cigarettes or cigarette packs, are better suited for determination of quantities of tobacco in commodities wherein tobacco is but one of several ingredients and wherein the quantity of tobacco is known. As explained above, the quantity of tobacco in a given number of plain or filter cigarettes or cigarette packs can be readily determined by multiplying the number of discrete cigarettes or packs with a factor which is indicative of the quantity of tobacco in a single cigarette or pack. As a rule, the evaluating apparatus of the present invention will employ detectors which are capable of furnishing electrical signals; however, at least certain groups of parts of such apparatus can be designed to furnish pneumatic or other types of signals.

As further shown in FIG. **1,** the evaluating apparatus can furnish information which is indicative of the ratio of the total quantity of tobacco admitted to a first machine to the quantity of tobacco which leaves by way of a main or secondary outlet of another machine. For example, the signals furnished by the divider QF'11 are indicative of the ratio of the quantity of tobacco entering the inlet EGZ of the machine ZM to the quantity of tobacco leaving by way of the secondary outlet ASF of the machine FA. Analogously, the signal from the divider QF'12 is indicative of the ratio of the quantity of tobacco admitted at the inlet EGZ of the machine ZM to the quantity of tobacco which leaves by way of the main outlet AGF of the machine FA. The signals from the dividers QP'11 and QP'12 indicate the ratios of the quantity of tobacco entering the machine FA via inlet EGZ to the quantities of tobacco leaving the machine PM by way of the outlets ASP and AGP.

FIG. **15** shows a filter rod making machine KF of the type known as KDF and produced by Hauni-Werke of Hamburg-Bergedorf, Western Germany. The machine KF of FIG. **15** is utilized to produce filter rods which can be fed into the magazine **54** of the filter cigarette making machine FA shown in FIG. **4.**

The machine KF comprises two main sections **301** and **302.** The section **301** serves for the preparation and treatment of a tow **304** of synthetic plastic filaments which is ready to be converted into the filler of a continuous wrapped filter rod, and the section **302** includes means which forms the filter rod and subdivides such rod into filter rod sections of desired length, e.g., into sections of six times unit length which can be admitted directly into the magazine **54** of FIG. **4.**

The first main section **301** includes a pair of feeding or advancing rolls **303** which draw a tow **304** containing a large number of filaments from a receptacle **343** which contains a substantial supply or bale **306** of filaments. The advancing rolls **303** draw successive increments of the tow **304** along two loosening or opening units **307, 308** each of which comprises one or more nozzles having orifices for discharge of compressed air which separates the filaments of the tow before the filaments reach a treating or plasticizing unit **312.** This unit **312** is mounted between two additional pairs of advancing and tensioning rolls **309, 311** which are driven at a speed exceeding that of the advancing rolls **303** to cause a certain elongation or stretching of filaments in the tow **304** whereby the stretching action results in further desirable separation of filaments from each other. The filaments in the receptacle **343** are stored in crimped condition.

The treating or plasticizing unit **312** comprises a vessel or tank **318** for a supply of liquid bonding medium

or plasticizer **313** which is sprayed across the path of separated and elongated filaments of the tow **304** whereby the droplets of atomized plasticizer adhere to such filaments prior to entry of the thus treated tow **304** into a horn-shaped condensing device **323** of the second main section **302.** One roll of each of the pairs of rolls **309, 311** is preferably provided with circumferentially extending grooves and the other roll of the pairs of rolls **309, 311** preferably consists of or carries a mantle of elastomeric material and cooperates with the grooved roll to transport the filaments in the form of a wide band or layer which is best suited for deposition of droplets of plasticizer **313** on a large number of filaments. The elastomeric rolls of the pairs of rolls **309, 311** are preferably formed with smooth peripheral surfaces.

The drive means for the pairs of advancing rolls **303, 309, 311** comprises an electric motor **314** which drives the lower roll of each of these pairs of rolls by way of endless belts or chains **314***a*, **314***b*, **314***c*. The speed of the advancing rolls **303** can be regulated by a variable-speed transmission **316** whose input member is driven by the belt **314***b* and whose output member drives the lower roll of the pair of rolls **303.** The ratio of the transmission **316** can be varied by a servomotor **317.** A further electric motor **319** is provided to drive a roller-shaped applicator **321** in the tank **318** of the plasticizing unit **312.** The roller **321** dips into the supply of plasticizer **313** in the tank **318** and withdraws a thin film of plasticizer which is sprayed against the adjacent portions of the cord **304***a* by a brush-shaped applicator **322** driven by the motor **314** by way of the belt **314***a* and a further belt or chain **314**d.

The thus treated tow **304** then passes through and is condensed by the horn **323** of the second main section **302** to form a rod-like filler which is thereupon wrapped into a web **327** of wrapping material to form a wrapped filter rod **331.** The web **327** is stored in the form of a bobbin **324** and is caused to move along a paster **326** which provides one of its marginal portions with a strip of adhesive. The wrapping takes place while the filler and the web **327** travel along and at the speed of the upper stretch of an endless belt **328** which is driven by the motor **314** through the intermediary of a further endless belt or chain **314***e*. The wrapping mechanism is shown at **329.** The resulting wrapped filter rod **331** then passes along a heated sealer plate **332** which heats the adhesive forming the seam between the overlapping marginal portions of the web **327** so that the adhesive sets before the corresponding portion of the filter rod **331** reaches a severing device **333** of the type known as cutoff and serving to subdivide the rod **331** into filter rod sections or filter elements **334** of desired length. Successive filter rod sections **334** are accelerated by a rotating cam **336** to be propelled into successive flutes of a transfer drum **337.** The latter converts the single file of filter rod sections **334** which advance beyond the cutoff **333** into a row of sections which move sideways and are transferred onto the upper stretch of an endless belt or chain conveyor **338** for transport into the magazine **54** of the filter cigarette making machine FA.

An ejector nozzle **341** is mounted between the cutoff **333** and transfer drum **337** to expel from their path all defective filter rod sections or all such filter rod sections which might be defective because they are produced at a particular stage of operation of the filter rod making machine KF. The arrangement is preferably such that the nozzle **341** expels those filter rod sections which are produced while the moving parts of the machine KF are being accelerated from zero speed and those filter rod sections which are produced during deceleration of the machine.

The evaluating system of the filter rod making machine KF comprises a first measuring device or detector MK2 which includes the receptacle **343** for the bale **306** of multifilament tow **304.** The purpose of the detector MK2 is to determine the quantity of filter material which enters the machine KF by way of the inlet EGK, i.e., the quantity of filter material which is introduced into the receptacle **343.** A second measuring device or detector MK11 is located between the cutoff **333** and transfer drum **337** to determine the quantity of filter material which leaves the machine KF by way of an auxiliary or secondary outlet ASK, namely, the quantity of filter material which is expelled by the ejector nozzle **341** to enter a collecting receptacle for defective or presumably defective filter rod sections **334.** A third measuring device or detector MK12 is adjacent to the transfer drum **337** (at the main outlet AGK) to determine the quantity of filter material which leaves the machine KF with the conveyor **338** for transport into the magazine **54** of the machine FA.

The measuring device or detector MK2 comprises a high-precision weighing device or scale **342** having an output **344** for electric signals and carrying the receptacle **343** for the bale **306.** The signal at the output **344** is indicative of the momentary weight of the contents of the receptacle **343.** A signal which is indicative of the initial weight of the bale **306** in the receptacle **343** is transmitted by the output **344** to the input *a* of a signal storing circuit S*p*K2. The output *c* of the signal storing circuit S*p*K2 transmits a signal during the interval which elapses while the bale **306** is being consumed by being withdrawn in the form of tow **304** for conversion into the filler of the wrapped filter rod **331.** The output *c* of the signal storing circuit S*p*K2 is connected with the input *a* of a differential circuit **346** having a second input *b* which is also connected with the output **344** of the detector MK2 and receives therefrom signals which are indicative of the momentary weight of filter material in the receptacle **343.** The signal at the output *c* of the circuit **346** is indicative of the difference between the original weight of filter material in the receptacle **343** and the momentary weight of such material. The output *c* of the circuit **346** is connected with the inputs *b* of dividers QK11 and QK12 and with the input *b* of a second differential circuit **347.**

The measuring device MK11 is a photosensitive detector having a light source **348** located at one side of the path for expelled filter rod sections (outlet ASK) and a photosensitive element **349** at the opposite side of such path. The element **349** produces a signal whenever an expelled filter rod section interrupts the light beam issuing from the light source **348.** The detector MK11 is similar to the detector MZ14 of FIG. **13.** The signals which are produced by the photosensitive element **349** are transmitted to the input *a* of a totalizer SK11 which is a counter circuit serving to count and record the sum of the signals produced by the element **349.** The output *c* the totalizer SK11 is connected with the input *a* of a multiplier XK11. The input *b* of the multiplier XK11 is connected with an adjustable source DK of reference signals which are indicative of the av-

erage quantity of filter material in a filter rod section **334.** The output *c* of the multiplier XK11 emits a signal which is indicative of the total quantity of filter material leaving the machine KF by way of the outlet ASK; this output is connected with the input *a* of the divider QK11 which has an output *c* connected with a recording device AK11.

The output *c* of the totalizer SK11 is further connected with the input *a* of a totalizer AK.

The detector MK12 comprises a photoelectronic scanning device **351** similar to the one shown in FIG. **7** or **8.** The output signal of its AND-gate (corresponding to the AND-gate **146** of FIG. **7** but not shown in FIG. **15**) is transmitted to the input *a* of a totalizer SK12. The output *c* of the totalizer SK12 is connected with the input *a* of a multiplier XK12. A second input *b* of the multiplier XK12 is connected with a second adjustable source DK of reference signals indicating the average quantity of filter material in a satisfactory filter rod section **334.** The output *c* of the multiplier XK12 transmits signals which are indicative of the total quantity of filter material having the machine KF by way of the main outlet AGK and such signals are transmitted to the input *a* of the divider QK12 which has an output *c* connected with a recording device AK12.

The output *c* of the totalizer SK12 is further connected with the input *b* of the totalizer AK whose output *c* is connected with the input *a* of the differential circuit **347.** The signal at the output *c* of the circuit **347** is transmitted to a third recording device **352** and to the input *a* of a signal comparing circuit **353.** The input *b* of the circuit **353** receives signals from a feeler **356** which scans the position of the shaft **354** of the servomotor **317** to thus indicate the ratio of the transmission **316** for the lower roll of the pair of advancing rolls **303.**

If the circuitry of FIG. **15** works on the principle of measuring (analogue), the feeler **356** indicates the rotation of the shaft **354.** If the circuitry works on the (digital) principle of counting, the feeler **356** indicates the magnitude of the angle through which the shaft **354** is displaced from a starting position. The output *c* of the signal comparing circuit **353** furnishes a signal which is indicative of the discrepancy between the actual and desired angular positions of the shaft **354** (i.e., of the momentary and desired ratios of the transmission **316**), and such signals are used to operate the servomotor **317** by way of an amplifier **357** whereby the servomotor **317** rotates the shaft **354** in a clockwise or in a counterclockwise direction to select the desired transmission ratio, depending on the (positive or negative) sign of the signal at the output *c* of the circuit **353.**

The operation of the structure shown in FIG. **15** is as follows:

A fresh bale **306** of filter material is placed into the receptacle **343** of the measuring device or detector MK2 at the inlet EGK. The output **344** of the weighing device **343** then transmits a signal to the input *a* of the signal storing circuit S*p*K2, and such signal is indicative of the total weight or quantity of filter material in the fresh bale **306.** The output *c* of the circuit S*p*K2 emits a signal which is indicative of the original weight of the bale **306** while the weight of the bale **306** decreases in response to removal of tow **304** by means of the advancing rolls **303.** The emission of signal at the output *c* of the circuit S*p*K2 is terminated when the respective bale **306** is consumed.

In the next step, the machine KF is started by completing the circuit of the motor **314** whereby the advancing rolls **303** draw the tow **304** from the receptacle **343.** The filaments of the tow **304** are loosened or opened during travel along the nozzle or nozzles of the units **307, 308** and are stretched and tensioned in the zone between the rolls **303, 309** to form a relatively wide flat layer or band which passes through the treating station to receive and retain particles of atomized plasticizer **313** which is being sprayed by the applicator **322** driven by the motor **314.** The thus treated tow **304** passes through and is condensed by the horn **323** to form a rod-like filler which is wrapped into the web **327,** as at **329,** to form the filter rod **331** which is heated at **332** and severed at **333** to yield a file of filter rod sections **334.** As mentioned before, the ejector nozzle **341** expels from their path those filter rod sections which are produced during the interval of acceleration of the moving parts in the machine KF from zero speed to a desired speed. The satisfactory filter rod sections **334** are accelerated by the cam **336** and are propelled into successive flutes of the transfer drum **337** which delivers such sections onto the upper stretch of the endless conveyor **338.** When the machine KF is to be arrested, the nozzle **341** ejects those filer rod sections which are being produced during the interval of deceleration of the motor **314** to zero speed.

The difference between the original weight and the momentary weight of the bale **306** in the receptacle **343** is determined on a continuous basis by the differential circuit **346** whose input *a* receives from the output *c* of the signal storing circuit SpK2 a signal indicating the original weight of the bale **306** and whose input *b* receives from the output **344** of the weighing device **342** a signal which indicates the momentary weight of the bale **306.** The signal at the output *c* of the circuit is transmitted to the input *b* of the differential circuit **347** whose input *a* is connected with the output *c* of the totalizer AK. The signal at the output *c* of the totalizer AK is the sum of signals received at the respective inputs *a* and *b.* i.e., from the totalizers SK11 and SK12 which are respectively connected with the detectors MK11 and MK12. The signal at the output *c* of the differential circuit **347** indicates whether or not the output of filter rod sections **334** (including those leaving at the secondary outlet ASK and those leaving at the main outlet AGK) is in proper relationship to the quantity of consumed filter material. If the quantity of produced filter rod sections is excessive, this might be an indication that the sections do not contain a satisfactory quantity of filter material, i.e., the quantity is less than needed to produce a satisfactory filtering action upon the smoke which passes through the filter plug of a filter cigarette FZ. If the number of filter rod sections **334** is below expectations, this indicates that the quantity of consumed filter material is excessive, i.e., that the filter tips may be too dense. In order to maintain the output within a desired range for extended periods of time, the output signal of the differential circuit **347** is transmitted to the input *a* of the signal comparing circuit **353** to serve as a reference signal. A change in the intensity of such reference signal results in a change in the intensity of signal at the output *c* of the circuit **353** and in adjustment of the ratio of the transmission **316** for the advancing rolls **303.** The voltage of the current supplied to the servomotor **317** by way of the amplifier **357** determines the extent of angular adjustment of the

shaft 354 which is the ratio changing element of the transmission 316. The adjustment in the angular position of the shaft 354 is terminated when the feeler 356 transmits to the input *b* of the signal comparing circuit 353 a signal which indicates that the momentary ratio of the transmission 316 corresponds to that which is indicated by the signal to the input *a* from the differential circuit 347. The servomotor 317 is arrested when the desired ratio (signal from the circuit 347) equals the momentary ratio (signal from the feeler 356) of the transmission 316. Any changes in the ratio of the transmission 316 result in proportionate changes in the rate of feed of the tow 304 into the second main section 302 of the machine KF. Thus, if the transmission 316 is adjusted to decelerate the rolls 303, the tow 304 is subjected to a more intensive stretching or tensioning action in the region between the rolls 303 and 309 (which latter rolls are driven at a constant speed proportional to the speed of the motor 314) so that the quantity of filter material per filter rod section 334 is reduced. Such quantity is increased if the rolls 303 are caused to rotate at a higher speed because the speed of the rolls 303 is then closer to that of the rolls 309 and the tow 304 is subjected to a less pronounced stretching action.

The signal from the output *c* of the differential circuit 347 is continuously transmitted to the recording device 352 which produces a record to be evaluated by supervisory personnel in order to indicate deviations of the actual output from the desired output over a certain period of time, for example, during an 8-hour shift.

The signals from the detectors MK11 and MK12 are counted and added up in the totalizers SK11 and SK12. The signals representing the sum of the respective signals are transmitted to the multipliers XK11 and XK12 and are multiplied by signals from the respective sources DK to be indicative to the weight or quantity of filter material leaving at the respective outlets ASK and AGK. The output signals from the multipliers XK11 and XK12 are transmitted to the inputs *a* of the respective dividers QK11, QK12 in response to transmission of signals by way of a conductor LRT which is connected with the inputs *u* of the dividers QK11 and QK12. Thus, the output signals from the multipliers XK11, XK12 can reach the respective dividers in response to transmission of signals by way of the conductor LRT. The dividers QK11, QK12 furnish output signals which are indicative of the ratio of the quantity of filter material leaving the machine KF by way of the respective outlets ASK, AGK to the initial quantity of filter material in the receptacle 343. The signal which appears at the output *c* of the differential circuit 346 is indicative of the consumption of filter material because such signal indicates the relationship of the original quantity of filter material in the receptacle 343 to the momentary quantity which, in turn, is indicative of the consumption of filter material.

If the machine KF consumes more than one bale 306 during a certain period of time (e.g., during a shift), the circuitry of the machine preferably includes additional signal storing circuits S*p*K'2 and S*p*K''2 (indicated by broken lines) which are connected with the inputs *b* of the dividers QK12, QK11 and serve to store signals representing the total weight of all fully consumed bales 306.

A feature of the evaluating apparatus in the machine KF of FIG. 15 is that the results of computing operations can be used to correct improper operation of one or more units in the machine. Thus, the output signal from the differential circuit 347 can be used to effect an automatic adjustment of the speed of advancing rolls 303 when such speed requires an adjustment because the filter rod sections 334 contain excessive or insufficient quantities of filter material.

A feature which is shared by the evaluating apparatus of FIGS. 1 and 15 is that each such apparatus comprises one or more measuring devices or detectors of a first type which measure the quantities of incoming tobacco or filter material, one or more measuring devices or detectors of a second type which measure the quantities of outgoing tobacco or filter material, and computing or calculating means (totalizing, multiplying and/or dividing circuits) which can furnish signals indicative of the ratio of incoming quantities to the ratio of outgoing quantities. As a rule, the evaluating apparatus will employ several detectors of the second type to insure accurate determination of quantities of tobacco or filter material which leave the machine or machines in satisfactory intermediate or finished products (plain or filter cigarettes, packs or filter rod sections) and of such quantities which leave the machine or machines in a reusable or non-reusable state but not as a part of satisfactory products. For example, the machine KF of FIG. 15 has a single detector MK2 of the first type (incoming filter material) and two detectors MK11, MK12 of the second type (outgoing filter material). The detector MK11 determines the quantities of filter material which leave the machine KF as a part of unsatisfactory or presumably unsatisfactory products, and the detector MK12 determines the quantities of filter material in satisfactory products 334 which are permitted to enter the next machine (FA of FIG. 4).

An important advantage of the improved evaluating method and apparatus is that the supervisory personnel is enabled to obtain accurate information which is indicative of the manner in which the commodities (tobacco, plain cigarettes, filter cigarettes or filter material) are being processed by the respective machine or group of machines. The personnel can readily detect the reasons for unsatisfactory ratio of the quantity of introduced material to the quantity of material leaving the machine or machines in the form of satisfactory products. Also, the personnel can readily locate that part or those parts of one or more machine where the largest losses in material occur. Thus, the improved method and apparatus render it possible to indirectly supervise the operation of one or more machines. In a production line, the improved method and apparatus permit a determination of the efficiency of a single machine as well as a determination of the efficiency or lack of efficiency of two or more directly or indirectly coupled machines. Such determination is especially important and useful in modern production lines which turn out up to and in excess of 4,000 rod-shaped articles per minute and consume very large quantities of tobacco and/or filter material.

Without further analysis, the foregoing will so fully reveal the gist of the present invention that others can, by applying current knowledge, readily adapt it for various applications without omitting features which fairly constitute essential characteristics of the generic and specific aspects of our contribution to the art and, therefore, such adaptations should and are intended to be comprehended within the meaning and range of equivalence of the claims.

What is claimed as new and desired to be protected by Letters Patent is set forth in the appended claims:

1. A method of supervising and evaluating the operation of machines for the production or processing of smokers' products wherein the commodities contained in or constituting smokers' products are admitted into at least one machine at at least one first point and are discharged from the machine at at least one second point, comprising a first measuring step including measuring the quantity of commodities which are admitted at at least one first point and producing first signals which are indicative of the measured quantities; a second measuring step including measuring the quantity of commodities which are discharged at at least one second point and producing signals which are indicative of the measured quantities; and utilizing said first and second signals for an automatic computing operation.

2. A method as defined in claim 1, wherein said signals are electric signals.

3. A method as defined in claim 1, wherein the condition of commodities which are admitted at said first point is different from the condition of commodities which are discharged at said second point.

4. A method as defined in claim 1, further comprising the step of regulating the admission of commodities as a function of the results of said computing operation.

5. A method of supervising and evaluating the operation of a plurality of cooperating machines for the production or processing of smokers' products wherein commodities contained in or constituting smokers' products enter a first machine at at least one first point to leave the first machine at at least one second point, to enter a second machine at at least one third point and to leave the second machine at at least one fourth point, comprising the first, second, third and fourth measuring steps respectively including measuring the quantity of commodities at said first, second, third and fourth points and producing first, second, third and fourth signals which are respectively indicative of the measured quantities at said first, second, third and fourth points; utilizing said third and fourth signals for a first automatic computing operation; and utilizing at least one of said third and fourth signals with at least one of said first and second signals for a second automatic computing operation.

6. A method as defined in claim 5, wherein said last mentioned step comprises utilizing at least one of said third and fourth signals with said first signal for said second computing operation.

7. A method as defined in claim 5, wherein the commodities leaving the first machine at said second point immediately enter the second machine by way of said third point.

8. A combination comprising a machine for the processing of commodities which constitute or form part of smokers' products, said machine having at least one inlet for admission of commodities and at least one outlet for discharge of commodities; first measuring means provided at said inlet and arranged to measure the quantity of admitted commodities and to produce first signals indicative of the measured quantities; second measuring means provided at said outlet and arranged to measure the quantity of discharged commodities and to produce signals signals indicative of the measured quantities; and automatic computing means for said first and second signals.

9. A combination as defined in claim 8, wherein said computing means comprises means for automatically calculating the ratio of quantities indicated by one of the said signals to quantities indicated by the other signal.

10. A combination as defined in claim 8, wherein said machine comprises a plurality of outlets and a plurality of second measuring means, one for each of said plurality of outlets and each arranged to measure the quantity of discharged commodities at the respective outlet and to produce discrete second signals indicative of the measured quantities at the respective outlets.

11. A combination as defined in claim 8, wherein said machine comprises means for admitting the commodities by way of said inlet at spaced intervals and means for discharging commodities by way of said outlet at spaced intervals, said first measuring means being arranged to produce a succession of first signals for successively admitted commodities and said second measuring means being arranged to produce a succession of second signals for successively discharged commodities, said computing means including discrete totalizing means for said first and second signals.

12. A combination as defined in claim 8, wherein said machine comprises a plurality of outlets including a main outlet for satisfactory commodities, said second measuring means being adjacent to said main outlet.

13. A combination as defined in claim 8, wherein said machine comprises a plurality of outlets including a main outlet for satisfactory commodities and at least one additional outlet for unsatisfactory commodities, said second measuring means being adjacent to said additional outlet.

14. A combination as defined in claim 8, wherein at least one of said measuring means comprises a weighing device for said commodities.

15. A combination as defined in claim 8, wherein at least one of said measuring means comprises means for counting the number of commodities and wherein the commodities passing said one measuring means are discrete articles of predetermined size and shape.

16. A combination as defined in claim 15, wherein each of said discrete articles contains a predetermined quantity of an ingredient of a smokers' product, such as fragments of tobacco leaves or filter material, and said computing means comprises means for multiplying the signals representing the counted numbers of articles with a factor which is indicative of the quantity of said ingredient in each of said articles.

17. A combination as defined in claim 8, wherein said measuring means comprise means for producing electric signals.

18. A combination as defined in claim 8, further comprising recording means operatively connected with said computing means and arranged to furnish recorded indications of the results of operations carried out by said computing means.

19. A combination as defined in claim 18, wherein said recording means includes means for producing written records of the results of operations carried out by said computing means.

20. A combination as defined in claim 8, wherein said machine further comprises adjustable feeding means for supplying the commodities at a variable rate by way of said inlet and regulating means for adjusting said feeding means as a function of the results of operations carried out by said computing means.

21. A combination as defined in claim 20, wherein said feeding means includes variable-speed transmission means and said regulating means comprises servomotor means responsive to signals from said computing means.

22. A combination comprising a production line having a plurality of directly coupled machines including a first machine and a second machine each arranged to process commodities which constitute or form part of smokers' products, each machine having at least one inlet for admission of commodities and at least one outlet for discharge of commodities; a plurality of first measuring means, one for each of said inlets and each arranged to measure the quantity of admitted commodities and to produce first signals indicative of the measured quantities; a plurality of second measuring means, one for each of said outlets and each arranged to measure the quantity of discharged commodities and to produce second signals indicative of the measured quantities; and automatic computing means for said first and second signals.

23. A combination as defined in claim 22, wherein said computing means comprises means for calculating the ratios of quantities indicated by said first signals to quantities indicated by said second signals.

24. A combination as defined in claim 23, wherein said calculating means includes first calculating means for determining the ratios of quantities indicated by the first and second signals furnished by measuring means for the inlet and outlet of said first machine and second calculating means for determining the ratios of quantities indicated by signals furnished by at least one measuring means associated with one of said machines and at least one measuring means associated with another machine.

25. A method of supervising and evaluating the operation of machines for the production or processing of smokers' products wherein the commodities contained in or constituting smokers' products are admitted into at least one machine at at least one first point and are discharged from the machine at at least one second point, comprising a first measuring step including measuring the quantity of commodities which are admitted at at least one first point and producing first signals which are indicative of the measured quantities; a second measuring step including measuring the quantity of commodities which are discharged at at least one second point and producing second signals which are indicative of the measured quantities; and utilizing said first and second signals for an automatic computing operation, said computing operation comprising establishing a ratio of quantities indicated by said first signals to quantities indicated by said second signals.

26. A method of supervising and evaluating the operation of machines for the production or processing of smokers' products wherein the commodities contained in or constituting smokers' products are admitted into at least one machine at at least one first point and are discharged from the machine at at least one second point, comprising a first measuring step including measuring the quantity of commodities which are admitted at at least one first point and producing first signals which are indicative of the measured quantities; a second measuring step including measuring the quantity of commodities which are discharged at a plurality of second points and producing a plurality of second signals each of which is indicative of the measured quantity at a different second point; and utilizing said first and second signals for an automatic computing operation.

27. A method of supervising and evaluating the operation of machines for the production or processing of smokers' products wherein the commodities contained in or constituting smokers' products are admitted into at least one machine at at least one first point and are discharged from the machine at at least one second point at timely spaced intervals, comprising a first measuring step including measuring the quantity of commodities which are admitted at at least one first point and producing successive first signals which are indicative of successively admitted quantities of commodities within a predetermined period of time; a second measuring step including measuring the quantity of commodities which are discharged at at least one second point and producing successive second signals which are indicative of successively discharged quantities of commodities within said predetermined period of time; and utilizing said first and second signals for an automatic computing operation, said computing operation comprising establishing a ratio of the sum of quantities indicated by said first signals to the sum of quantities indicated by said second signals.

28. A method of supervising and evaluating the operation of machines for the production or processing of smokers' products wherein the commodities contained in or constituting smokers' products are admitted into at least one machine at at least one first point and are discharged from the machine at at least one second point, comprising a first measuring step including measuring the quantity of commodities which are admitted at at least one first point and producing first signals which are indicative of the measured quantities; a second measuring step including measuring the quantities of commodities which are discharged at a plurality of second points including at least one second point for the discharge of satisfactory commodities and at least one second point for the discharge of unsatisfactory commodities, and producing discrete second signals which are respectively indicative of the measured quantities of satisfactory and unsatisfactory commodities; and utilizing said first and second signals for an automatic computing operation.

29. A method of supervising and evaluating the operation of machines for the production or processing of smokers' products wherein the commodities contained in or constituting smokers' products are admitted into at least one machine at at least one first point and are discharged from the machine at at least one second point, comprising a first measuring step including measuring the quantity of commodities which are admitted at at least one first point and producing first signals which are indicative of the measured quantities; a second measuring step including measuring the quantity of commodities which are discharged at at least one second point and producing second signals which are indicative of the measured quantities, at least one of said measuring steps comprising weighing the commodities at the respective point and producing signals which are indicative of the weight of such commodities; and utilizing said first and second signals for an automatic computing operation.

30. A method of supervising and evaluating the operation of machines for the production or processing of smokers' products wherein the commodities contained in or constituting smokers' products are admitted into

at least one machine at at least one first point and are discharged from the machine at at least one second point and wherein the commodities are in the form of discrete articles, comprising a first measuring step including measuring the quantity of commodities which are admitted at at least one first point and producing first signals which are indicative of the measured quantities; a second measuring step including measuring the quantity of commodities which are discharged at at least one second point and producing second signals which are indicative of the measured quantities, at least one of said measuring steps comprising counting the commodities at the respective point and producing signals which are indicative of the number of counted articles; and utilizing said first and second signals for an automatic computing operation.

31. A method as defined in claim **30,** wherein said computing operation comprises multiplying said number with a factor which is indicative of the average mass of at least one ingredient of each article.

32. A method of supervising and evaluating the operation of machines for the production or processing of smokers' products wherein the commodities contained in or constituting smokers' products are admitted into at least one machine at at least one first point and are discharged from the machine at at least one second point, comprising a first measuring step including measuring the quantity of commodities which are admitted at at least one first point and producing first signals which are indicative of the measured quantities; a second measuring step including measuring the quantity of commodities which are discharged at at least one second point and producing signals which are indicative of the measured quantities; utilizing said first and second signals for an automatic computing operation; and recording the results of said computing operation.

33. A method of supervising and evaluating the operation of machines for the production or processing of smokers' products wherein the commodities contained in or constituting smokers' products are admitted into at least one machine at at least one first point and are discharged from the machine at at least one second point, comprising a first measuring step including measuring the quantity of commodities which are admitted at at least one first point and producing first signals which are indicative of the measured quantities; a second measuring step including measuring the quantity of commodities which are discharged at at least one second point and producing signals which are indicative of the measured quantities; utilizing said first and second signals for an automatic computing operation; and indicating the results of said computing operation.

34. A method of supervising and evaluating the operation of machines for the production or processing of smokers' products wherein fragments of tobacco leaves contained in or constituting smokers' products are admitted into at least one machine at at least one first point and are discharged from the machine at at least one second point, comprising a first measuring step including measuring the quantity of fragments of tobacco leaves which are admitted at at least one first point and producing first signals which are indicative of the measured quantities; a second measuring step including measuring the quantity of fragments of tobacco leaves which are discharged at at least one second point and producing signals which are indicative of the measured quantities; and utilizing said first and second signals for an automatic computing operation.

35. A method of supervising and evaluating the operation of machines for the production or processing of smokers' products wherein filaments of filter material are admitted into at least one machine at at least one first point and are discharged from the machine at at least one second point, comprising a first measuring step including measuring the quantity of filaments of filter material which are admitted at at least one first point and producing first signals which are indicative of the measured quantities; a second measuring step including measuring the quantity of filaments of filter material which are discharged at at least one second point and producing signals which are indicative of the measured quantities; and utilizing said first and second signals for an automatic computing operation.

36. A method of supervising and evaluating the operation of machines for the production or processing of smokers' products wherein the commodities contained in or constituting smokers' products are admitted into at least one machine at at least one first point and are discharged from the machine at at least one second point and wherein the commodities are rodlike articles, comprising a first measuring step including measuring the quantity of rod-like articles which are admitted at at least one first point and producing first signals which are indicative of the measured quantities; a second measuring step including measuring the quantity of rod-like articles which are discharged at at least one second point and producing signals which are indicative of the measured quantities; and utilizing said first and second signals for an automatic computing operation.

37. A method of supervising and evaluating the operation of machines for the production or processing of smokers' products wherein the commodities contained in or constituting smokers' products are admitted into at least one machine at at least one first point and are discharged from the machine in the form of packs of rod-shaped articles at at least one second point, comprising a first measuring step including measuring the quantity of commodities which are admitted at at least one first point and producing first signals which are indicative of the measured quantities; a second measuring step including measuring the quantity of commodities which are discharged at at least one second point and producing signals which are indicative of the measured quantities; and utilizing said first and second signals for an automatic computing operation.

* * * * *