Jan. 3, 1950 W. G. ANDERSON, JR 2,493,281

FOLDING PAPER BOX

Filed Nov. 24, 1947 3 Sheets-Sheet 1

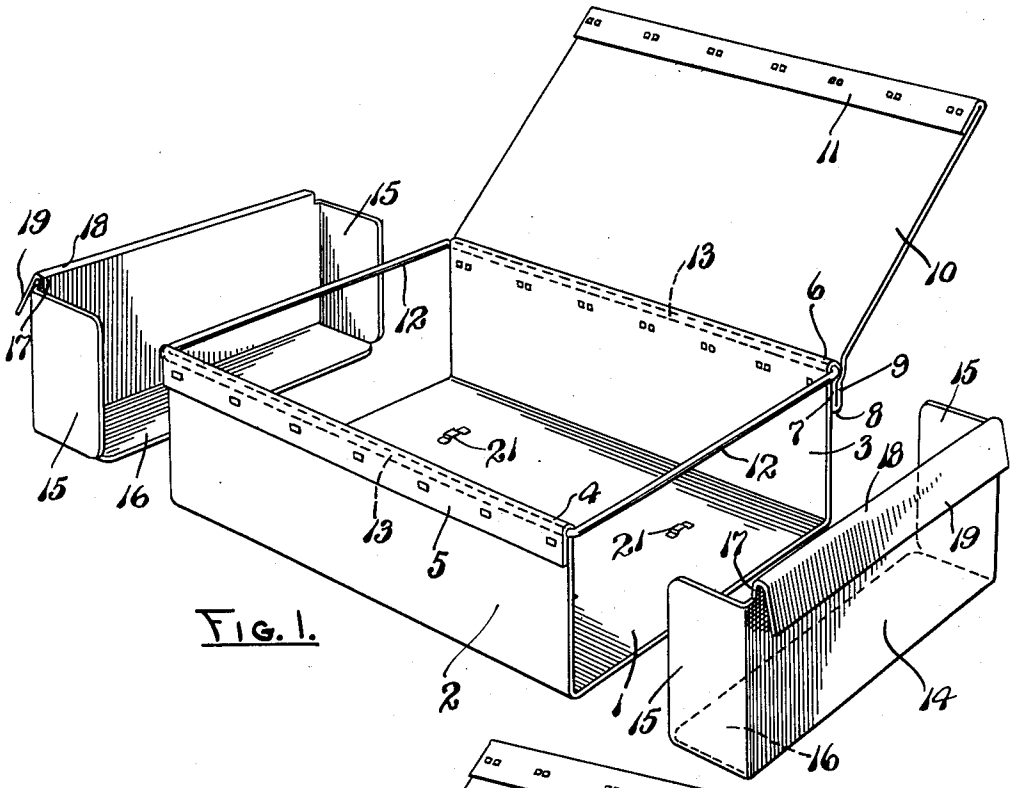

FIG. 1.

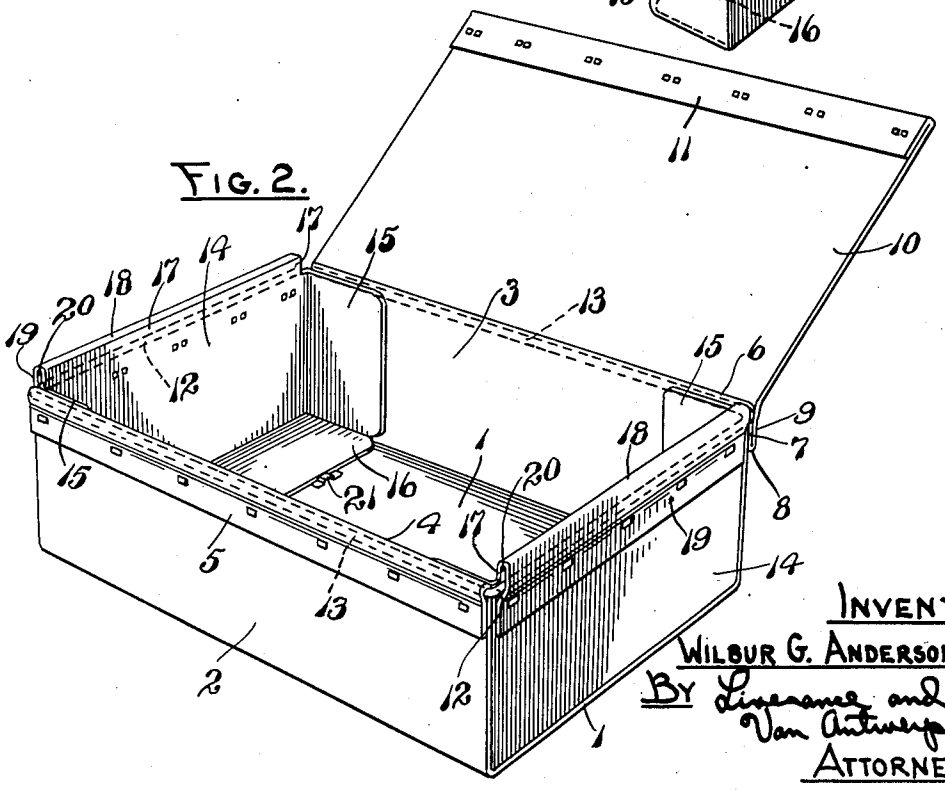

FIG. 2.

INVENTOR
WILBUR G. ANDERSON, JR.
BY Lipscomb and Van Antwerp
ATTORNEYS

Jan. 3, 1950 W. G. ANDERSON, JR 2,493,281

FOLDING PAPER BOX

Filed Nov. 24, 1947 3 Sheets-Sheet 2

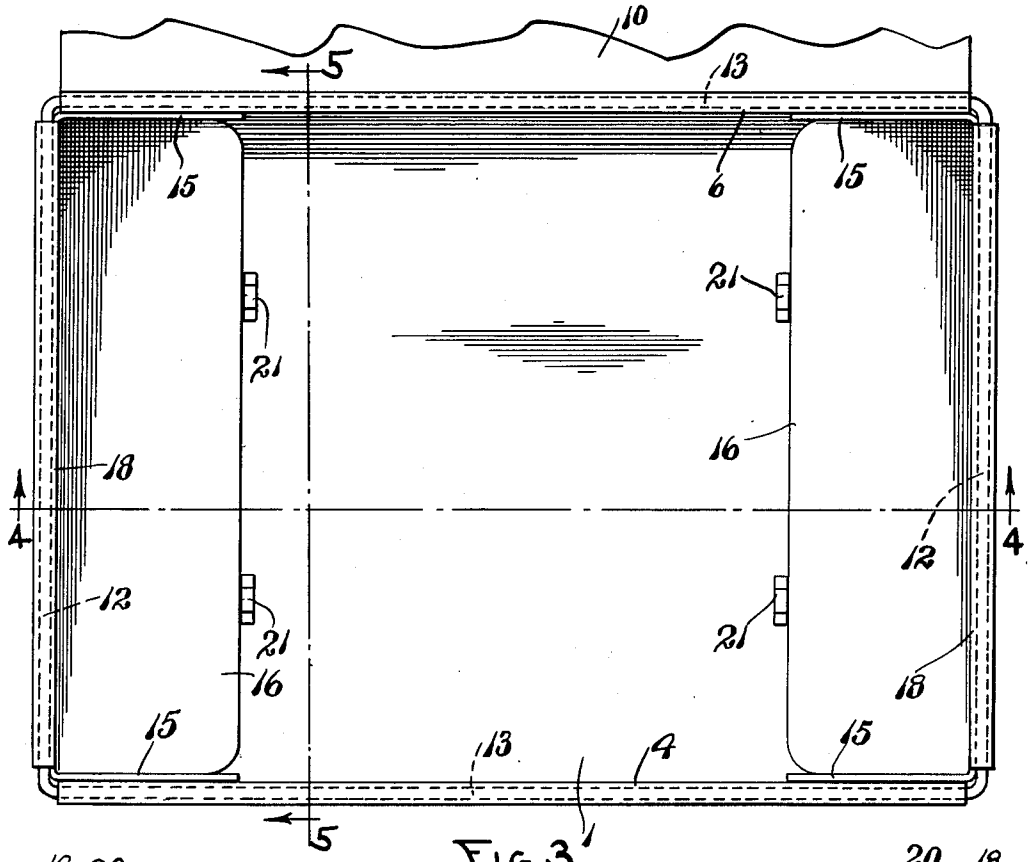

FIG. 3.

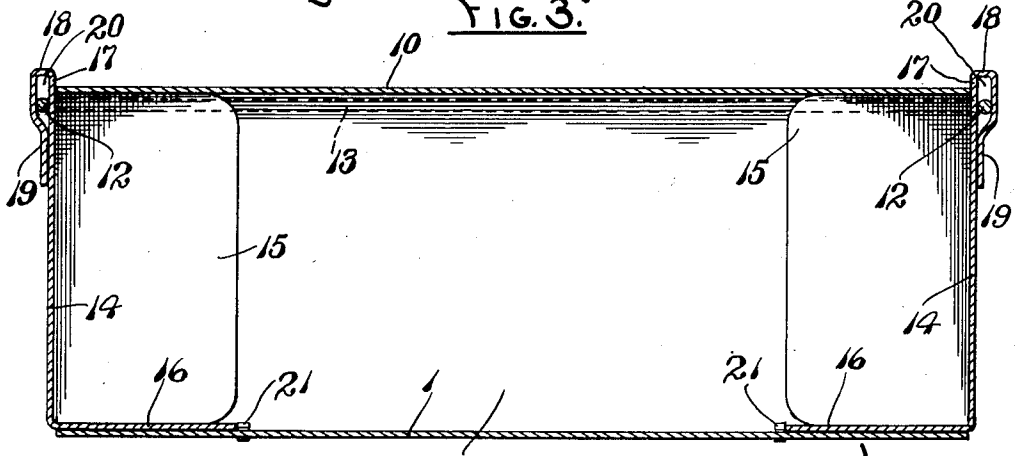

FIG. 4.

INVENTOR
WILBUR G. ANDERSON, JR.
BY Livernois and Van Antwerp
ATTORNEYS

Jan. 3, 1950 W. G. ANDERSON, JR 2,493,281

FOLDING PAPER BOX

Filed Nov. 24, 1947 3 Sheets-Sheet 3

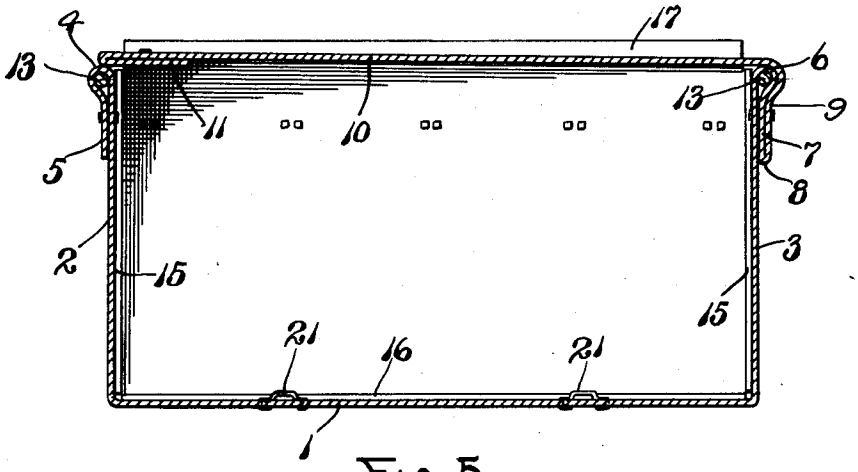

FIG. 5.

FIG. 6.

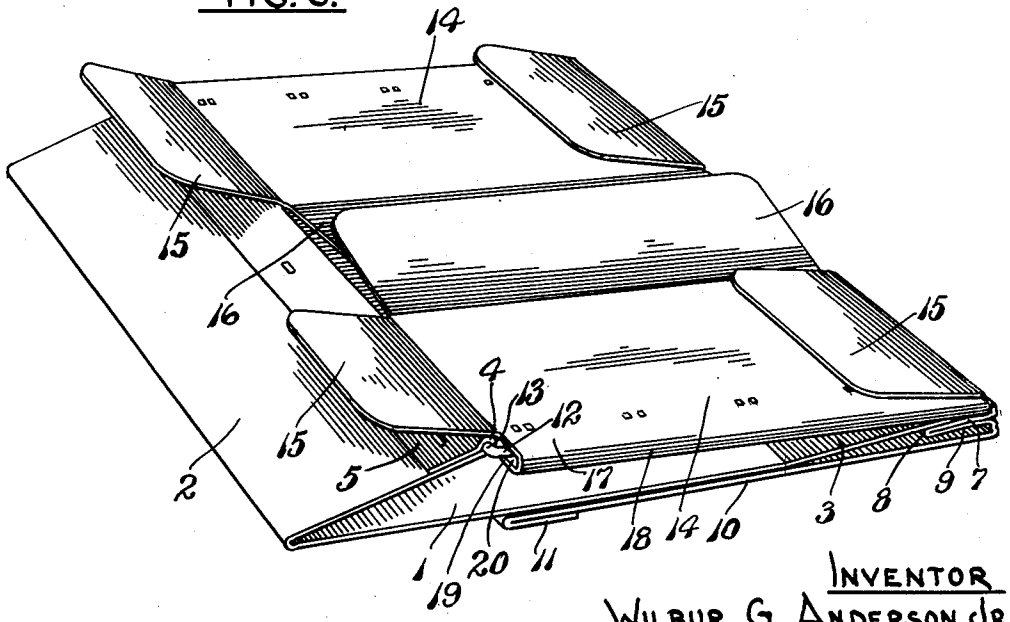

INVENTOR
WILBUR G. ANDERSON, JR.
BY Livernois and Van Antwerp
ATTORNEYS

Patented Jan. 3, 1950

2,493,281

UNITED STATES PATENT OFFICE

2,493,281

FOLDING PAPER BOX

Wilbur G. Anderson, Jr., Grand Rapids, Mich., assignor to American Box Board Company, Grand Rapids, Mich., a corporation of Michigan

Application November 24, 1947, Serial No. 787,630

7 Claims. (Cl. 229—23)

1

The present invention is directed to a folding or collapsible box, made of paperboard, which is durable and sturdy in use and may be re-used many times. When it is containing merchandise which is to be carried from its place of production to its destination, either a wholesale or retail establishment, the box is held in its merchandise-retaining form, has a swingable cover for closing the upper side of the box; and a plurality of said boxes may be stacked one upon the other without distortion or other damage to said boxes.

One place of use of the invention is in the transporting of baked goods, such as buns, from a bakery to retail stores. The boxes with the buns therein are loaded in the body of a motor vehicle and the available space within the body may be utilized by superimposing the bun-filled boxes one upon another. Upon reaching the store and emptying the boxes of the buns or other baked goods, such boxes are collapsible to substantially the smallest space which the bottom, sides, ends and cover making up the boxes can occupy and are returned to the bakery for reuse. Also in shipping the boxes from the factory which manufactures them to the users thereof, the folding collapsibility of the boxes conserves shipping space and reduces freight costs.

It is an object and purpose of the present invention to provide a novel, collapsible box structure of the character noted which is strong and durable and which may be substantially instantly changed from its folded to its merchandise-receiving positions and vice versa. Further objects of the invention are to provide such novel and sturdy box at low cost, and to further provide a box of a long life of usefulness which may be re-used a great many times before it is discarded.

An understanding of the invention may be had from the following description, taken in connection with the accompanying drawings, in which,

Fig. 1 is a perspective view of the three parts of paperboard material which, together with an open frame, are used in the making of the box, the paperboard members of the box being separated and as before assembly,

Fig. 2 is a perspective view showing the assembled box and as it is used for receiving buns or other articles of merchandise,

Fig. 3 is a somewhat enlarged plan view of the box shown in Fig. 1, with the cover or top broken away,

Fig. 4 is a longitudinal vertical section substantially on the plane of line 4—4 of Fig. 3,

2

Fig. 5 is a transverse vertical section on the plane of line 5—5 of Fig. 3, in both Figs. 4 and 5, the open end of the box being closed, and

Fig. 6 is a perspective view of the collapsed box.

Like reference characters refer to like parts in the different figures of the drawings.

In the construction of the box, a length of paperboard material is provided which is suitably scored or otherwise prepared for the production of a box bottom 1 of rectangular form, from one side edge of which an outer or front side 2 may extend vertically, and at the rear side edge of which a rear side 3 may extend vertically parallel to the front side 2. At its upper edge portion, as in Fig. 1, the front side 2 is bent back upon itself and formed into a rolled upper edge 4, from which there is continued downwardly a short flap 5, extending the full length of the side 2, and staple-connected thereto.

At the upper edge of the rear side 3 the material is turned rearwardly and formed into a curved roll 6 which is extended at the rear side 3 in a downwardly extending section 7 for a distance equal substantially to the width of the flap 5. It is then sharply bent back upon itself at 8 and extended upwardly in a section 9 which lies against the section 7. Staples are passed through both sections 7 and 9 and the rear side 3 for a permanent connection as shown. The rear section 9, which is disposed substantially vertically in the box as in Figs. 1 and 2, has continuing from and integral therewith, a cover 10 which at its free edge is turned back upon itself in a reinforcing flap 11, staple-connected as shown.

An open frame of wire material is used having parallel spaced ends 12 and parallel spaced sides 13, connected at the corners of the frame. The paperboard material in forming the curved upper edge of the front side 2, that is, the roll at 4, and also in forming the rear side upper edge roll 6, is bent around the sides 13 of the open frame, which is thus permanently connected at its sides at the upper edge portions of the front and rear sides 2 and 3 of the box, with the ends 12 of the open frame extending from front to rear, at each end of the box, above the ends of the bottom 1 as shown.

Each end of the box is formed of a single sheet of paperboard material of the same, or substantially the same, gauge and weight as that used for the bottom, sides and cover of the box. Each has a rectangular vertical end section 14 from each end of which a substantially rectangular

flap 15 extends inwardly at right angles. From the bottom edge of each of the vertical end sections 14, a bottom flap 16 also extends inwardly at right angles. From the upper edge of each of the end sections 14 a short lip 17, which, in length, is slightly less than the length of the end section 14, extends vertically and is then bent outwardly in a short horizontal ledge 18 and thence continued downwardly and outwardly in a terminal flap 19. One of said flaps is passed around each of the end wires 12 and at its lower portion staple-connected to its associated end member 14 below said end wires, there being provided a short vertical slot 20 between each of the lips 17 and the adjacent portion of the end member 14 at the inner side, and between the upper portion of the flap at the outer side of said slot. The ends of the box are therefore connected with the end wires 12 so that they may turn about said wires as an axis of turning, and also have a loose motion or limited movement thereon within the limits of the slots 20.

At the proper distance inward from each end of the bottom 1, staples 21 are secured, preferably two in number, toward but spaced from each end of the bottom, which have, at their upper sides, central upwardly extending projections against which the inner edges of the bottom flaps 16 engage when the box is in its merchandise-receiving position, as in Fig. 2.

Merchandise such as baked goods, included in which are buns, may load the box, which when filled has the cover 10 turned downwardly between the upwardly projecting lips 17, with the reinforcing flap 11 of the cover resting upon the front return bend or roll 4. There are no free or raw edges of the paperboard material at the upper edges of the ends or sides of the box or at the free edges of the cover, except at the ends of said cover, and said end edges are protected by the upwardly extending lips 17 of the box ends.

The box described is readily collapsible. The lower sections 16 may be disengaged from the staples 21, whereupon the ends are turned about the frame members 12 upwardly and outwardly. This permits a collapsing of the box as in Fig. 6, with the rear side 3 extending from the rear edge of the bottom 1 and the front side 2 folding thereover. The cover 10 is turned back underneath the rear side 3 and bottom 1. The ends are reversed in their rotative movement and come against and lie over the rear sides 2 and the bottom 1. The front flaps 15 extend over the upper side of the front side 2 and the rear flaps 15 are turned over their associated end members 14. The bottom flaps 16 extend toward and overlap each other as in Fig. 6.

The re-setting of the box after it has been folded or collapsed to the position in Fig. 6, for loading with desired merchandise, is by turning the ends upwardly and outwardly about the end rods 12 of the open frame, thence lifting the whole box vertically so that the front and rear sides 2 and 3 assume a vertical position and thereafter turning the ends inwardly toward each other and into the positions to bring the end flaps 15 against the inner sides of the front and rear sides 2 and 3, and the bottom flaps 16 against the bottom 1, passing over and engaging the outer sides of the staple stops 21. The box thereupon is held securely in its merchandise-receiving position, may receive its load and have the cover moved to closed position.

The box structure described is practical and is very useful. Used for delivery by bakers, the baked goods are carried therein and maintained in a sanitary condition with exclusion of dirt, dust, moisture and the like. After being carried into a retail store and the contents removed, the box is collapsed and put back in the delivery vehicle and returned to the bakery for re-use. The construction is one which is especially sturdy and durable and may be used scores of times before it has to be discarded.

The invention is defined in the appended claims and is to be considered comprehensive of all forms of structure coming within their scope.

I claim:

1. In a box structure, a rectangular bottom, spaced rectangular sides foldably connected with the bottom at the longitudinal edges thereof, said sides being adapted to extend vertically from the bottom at right angles thereto, a rectangular wire frame pivotally connected to the upper edges of said sides and extending between said sides, and a box end at each end of the box comprising, a member located vertically at and close to its associated end of the box, means for rotatively connecting said end members adjacent their upper edge to said wire frame, each of said members at its lower edge having a flap extending inwardly adapted to lie against the bottom of said box when the bottom is located in a horizontal plane and the sides and ends extend in vertical planes at right angles thereto.

2. A structure as described in claim 1, each of said end members at each end thereof having an inwardly extending flap foldably connected thereto adapted to be located against the inner sides of the sides of the box, and having lower edges adapted to engage against the bottom of the box.

3. A structure as defined in claim 1, and stops connected to the bottom of the box extending short distances thereabove, against which the inner edges of said bottom flaps are adapted to engage to hold the ends of the box against inward rotative movement.

4. In a structure of the class described, a box of paper material including, a rectangular length of said material scored transversely at spaced apart points in lines at right angles to the length of said material to provide a horizontal rectangular bottom and spaced vertical rectangular sides foldable with respect to said bottom at the longitudinal edges thereof and adapted to extend upwardly at right angles therefrom, a rectangular wire frame rotatably connected to the upper edges of said sides and extending between said sides, and an end closure for each end of the box comprising, a rectangular vertical end member, a horizontally disposed flap foldably connected to said end member at its lower edge, vertical flaps, one at each end of said rectangular member foldably connected thereto at its vertical edges, said flaps being adapted to extend inwardly over the bottom of the box and against the sides thereof, said vertical rectangular end member having a short vertical extension at its upper edge continued outwardly in a short horizontal ledge and thence continued downwardly in a terminal flap around its adjacent frame member, said terminal flap being permanently connected to said vertical rectangular end member.

5. A structure as defined in claim 4, said connection of said flap to its associated rectangular end member being at a distance from said upper horizontal ledge whereby a vertical space is provided of a width generally equal to the diameter

of said frame member and of a height in excess of the diameter of the frame.

6. A structure as defined in claim 4, said box at one side thereof and at its upper edge portions having a cover foldably connected therewith for closing the open upper side of the box, the ends of the cover when in closed position lying within the upper portions of the ends of the box and below said upper horizontal ledges.

7. A structure as defined in claim 4, and stops permanently connected to the bottom of the box and extending upwardly therefrom, located in position for the inner edges of the bottom flaps of said box ends to come thereagainst and prevent

inward rotative movements of said box ends about the axis of the rods.

WILBUR G. ANDERSON, JR.

REFERENCES CITED

The following references are of record in the file of this patent:

UNITED STATES PATENTS

Number	Name	Date
1,126,123	Streit	Jan. 26, 1915
1,818,320	Gorsuch	Aug. 11, 1931
1,833,605	Gates, Jr.	Nov. 24, 1931
2,246,966	Zalkind	June 24, 1941