US00D918810S

(12) United States Design Patent

Lickliter

(10) Patent No.: US D918,810 S
(45) Date of Patent: ** May 11, 2021

(54) **WHEEL**

(71) Applicant: **Wheel Pros, LLC**, Greenwood Village, CO (US)

(72) Inventor: **Hans Lickliter**, Canyon Country, CA (US)

(**) Term: **15 Years**

(21) Appl. No.: **29/722,962**

(22) Filed: **Feb. 3, 2020**

(51) **LOC (13) Cl.** **12-16**

(52) **U.S. Cl.**
USPC **D12/209**

(58) **Field of Classification Search**
USPC D12/204–213; D21/563
CPC B60B 7/00; B60B 7/02; B60B 7/04; B60B 7/01; B60B 7/06; B60B 3/02; B60B 3/04; B60B 3/06; B60B 3/10; B60B 1/00; B60B 1/08; B60B 1/10; B60B 1/12
See application file for complete search history.

(56) **References Cited**

U.S. PATENT DOCUMENTS

D291,796	S		9/1987	Reid
D361,975	S		9/1995	Weld
D391,216	S		2/1998	Ballmann
D408,775	S		4/1999	Shikado
D453,492	S		2/2002	Laengerer
D455,698	S		4/2002	Chung
D467,212	S		12/2002	Noriega
D470,094	S		2/2003	van Hooydonk
D480,036	S		9/2003	Laengerer
D482,996	S		12/2003	Sulahian
D492,925	S		7/2004	Fitzgerald
D496,317	S		9/2004	Kataoka
D499,684	S		12/2004	Cheng
D502,438	S		3/2005	Weld
D504,859	S		5/2005	Sulahian
D505,374	S		5/2005	Aleman
D510,307	S		10/2005	Howes
D523,797	S		6/2006	Gallert
D524,212	S		7/2006	Phillips
D524,220	S		7/2006	Scheu
D526,263	S	*	8/2006	Brown D12/209
D528,495	S		9/2006	Truebsbach
D529,854	S	*	10/2006	Scheu D12/211
D542,209	S		5/2007	Pfeiffer
D549,148	S		8/2007	Buschmann
D552,524	S	*	10/2007	Tirado D12/209
D569,777	S		5/2008	Chung
D577,650	S		9/2008	Chung
D579,845	S		11/2008	Chung
D582,831	S		12/2008	Musser
D598,357	S		8/2009	Chung
D617,723	S		6/2010	Zhao
D623,109	S		9/2010	Markefka
D623,111	S	*	9/2010	Spoerle D12/211
D623,573	S	*	9/2010	Thurner D12/209
D633,840	S	*	3/2011	Johnson D12/209
D635,903	S		4/2011	Zhang
D654,007	S		2/2012	Nissl
D654,420	S		2/2012	Guay
D660,771	S		5/2012	Mueller-Stolz
D669,009	S		10/2012	Chung

(Continued)

Primary Examiner — Stacia A Cadmus
(74) *Attorney, Agent, or Firm* — Eric Hanscom

(57) **CLAIM**

The ornamental design for a wheel, as shown and described.

DESCRIPTION

FIG. **1** is a perspective view of a wheel showing my new design; and,

FIG. **2** is a front view thereof.

In the drawings the broken lines depict portions of the wheel that form no part of the claimed design.

1 Claim, 2 Drawing Sheets

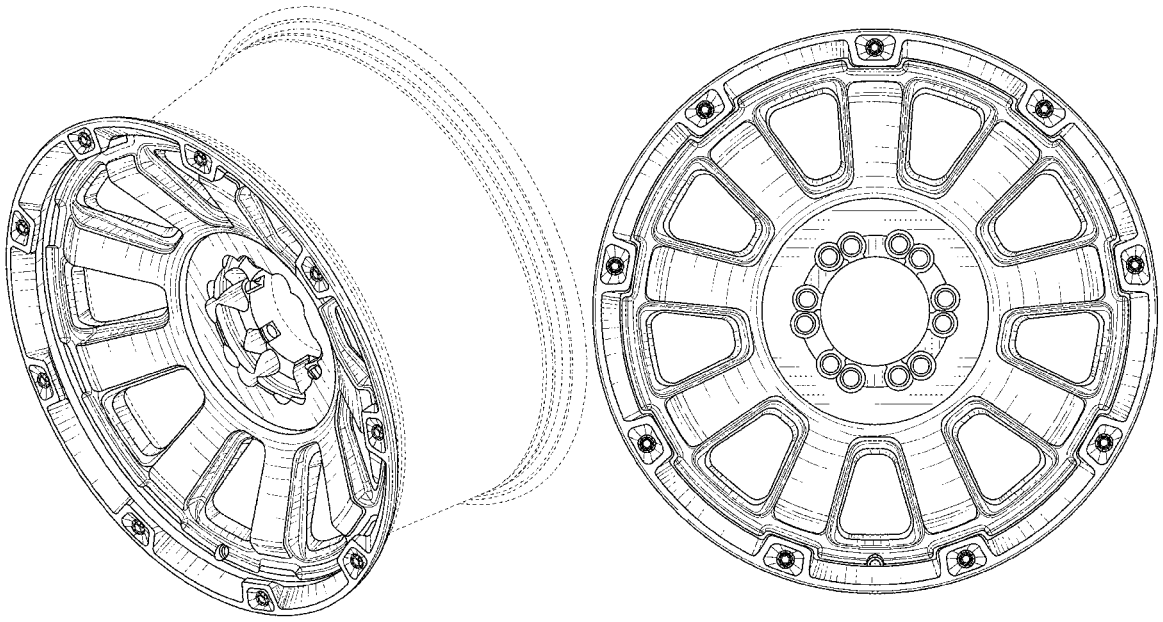

(56) **References Cited**

U.S. PATENT DOCUMENTS

D686,961	S		7/2013	Chung	
D695,193	S		12/2013	Kong	
D698,300	S		1/2014	Chung	
D702,172	S		4/2014	Chung	
D704,117	S		5/2014	Chung	
D704,617	S		5/2014	Chung	
D706,197	S		6/2014	Chung	
D707,167	S		6/2014	Chung	
D709,020	S		7/2014	Chung	
D713,316	S		9/2014	Song	
D714,207	S		9/2014	Kim	
D717,709	S		11/2014	Valencia Pollex	
D719,893	S		12/2014	Kim	
D731,946	S		6/2015	Chung	
D742,293	S		11/2015	Chung	
D745,842	S	*	12/2015	Wheel	D12/209
D753,046	S		4/2016	Liffick	
D756,882	S		5/2016	Tirado	
D766,805	S		9/2016	Chung	
D768,554	S	*	10/2016	Rueckheim	D12/211
D769,785	S		10/2016	Wells	
D698,298	S		1/2017	Cortes	
D780,655	S		3/2017	Trim	
D797,636	S	*	9/2017	Chung	D12/211
D823,776	S	*	7/2018	Glover	D12/211
D859,273	S	*	9/2019	Anton	D12/211
D890,068	S	*	7/2020	Junghans	D12/209
D901,358	S	*	11/2020	Liu	D12/209
D901,359	S	*	11/2020	Liu	D12/209
D901,361	S	*	11/2020	Liu	D12/211

* cited by examiner

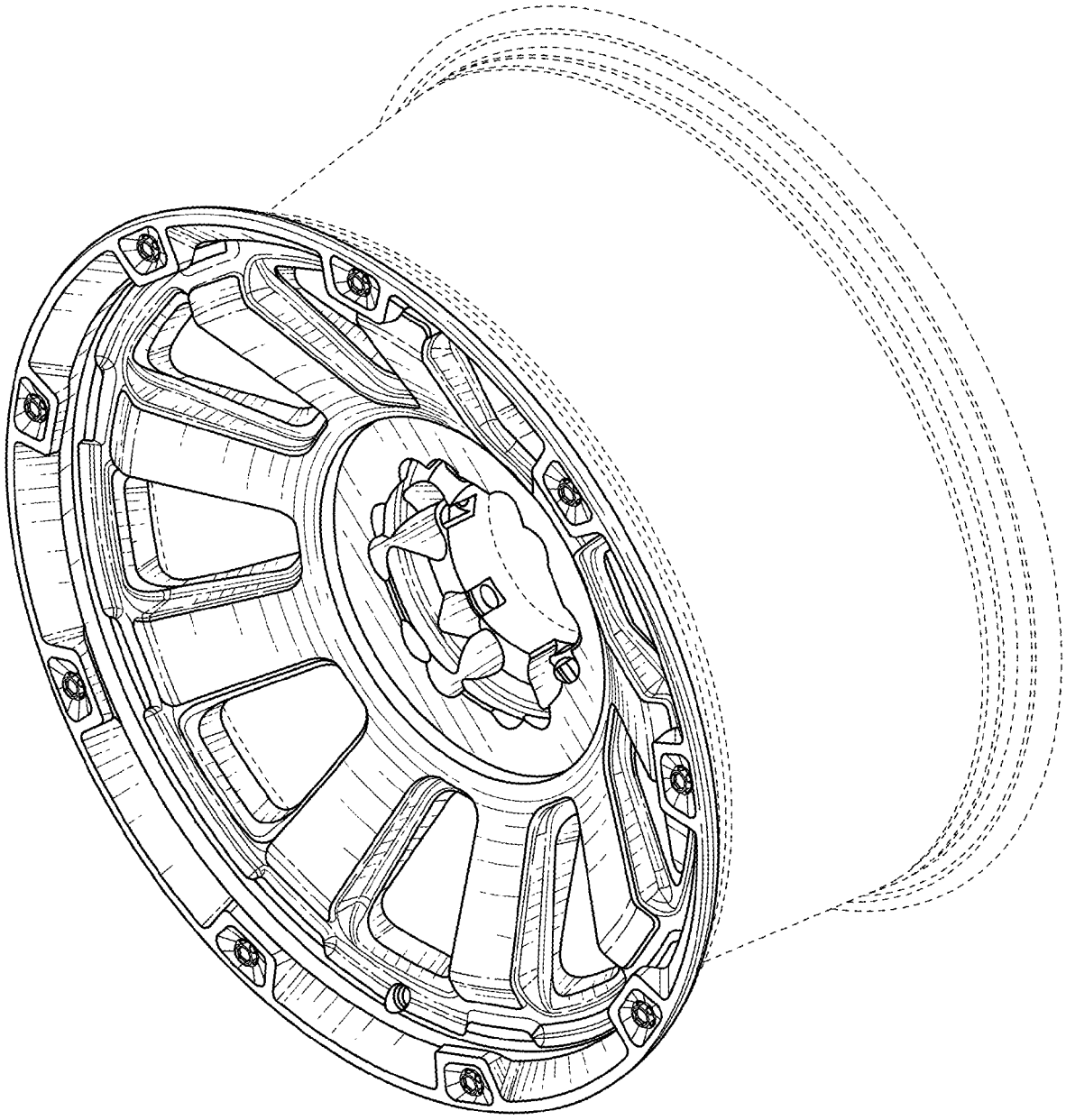

FIG. 1

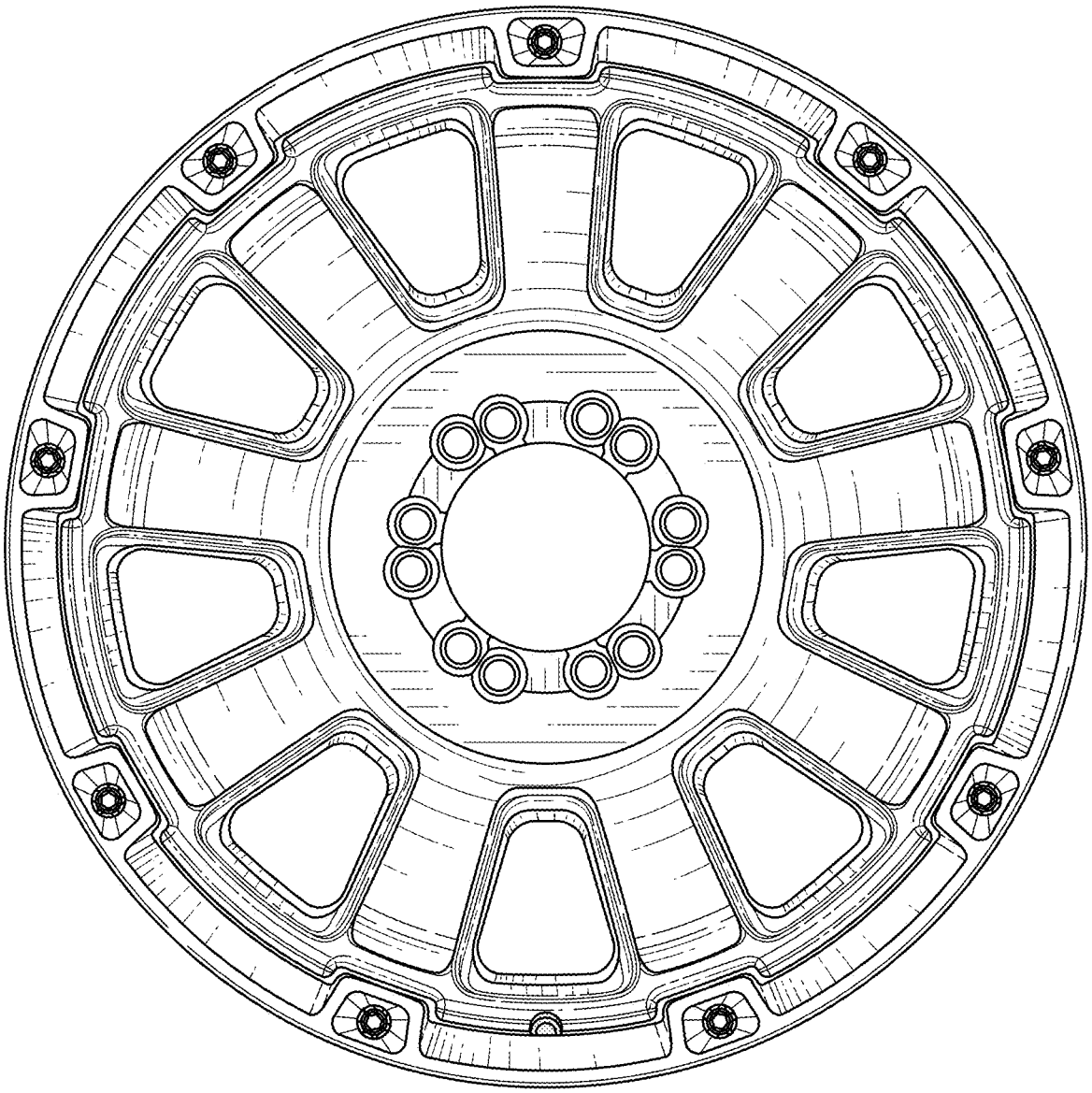

FIG. 2