March 17, 1931. M. S. SILVA 1,796,694

TWO-WAY SIGNAL DEVICE

Filed Oct. 14, 1929

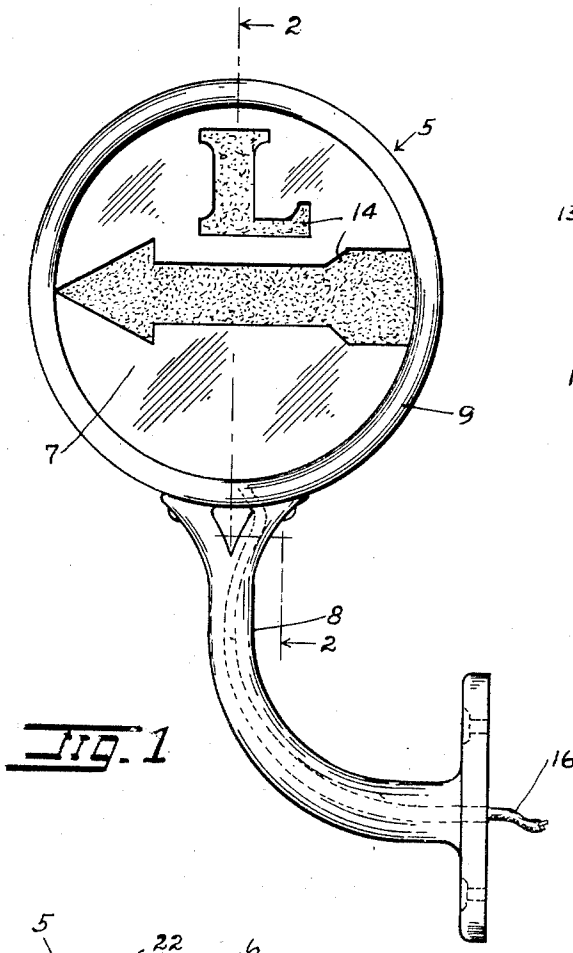

Fig. 1

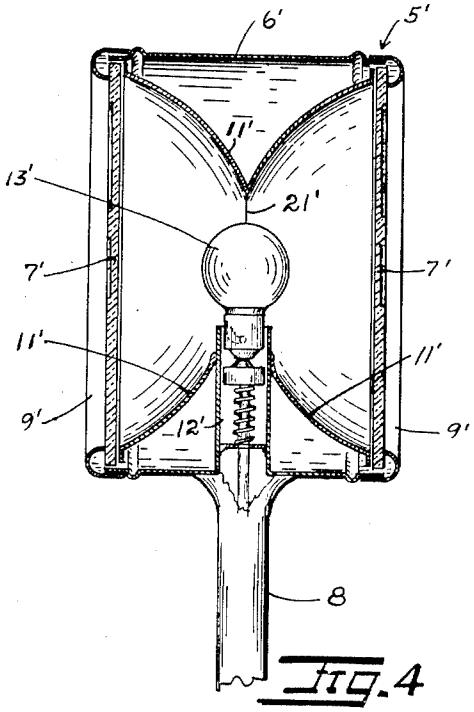

Fig. 4

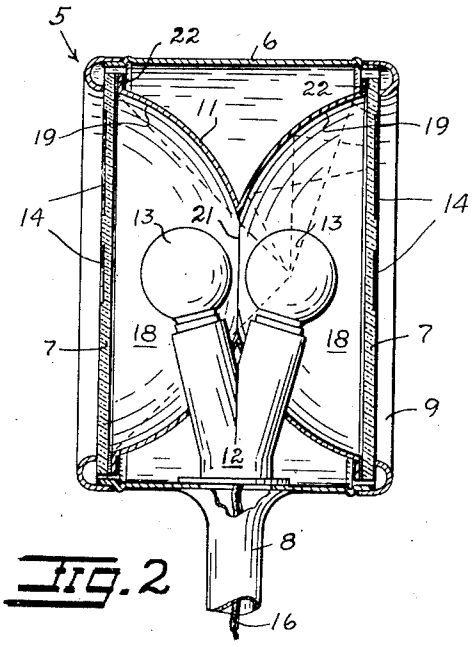

Fig. 2

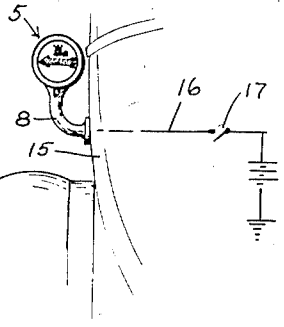

Fig. 3

INVENTOR.
Manuel S. Silva
BY
M. C. Frank
ATTORNEY.

Patented Mar. 17, 1931 1,796,694

UNITED STATES PATENT OFFICE

MANUEL S. SILVA, OF DECOTO, CALIFORNIA, ASSIGNOR OF THREE-TENTHS TO ANTONE J. ROBERTS, OF HAYWARD, CALIFORNIA

TWO-WAY SIGNAL DEVICE

Application filed October 14, 1929. Serial No. 399,431.

The invention relates to a signal device wherein differently directed illuminatable symbols are arranged to be simultaneously illuminated, the device being particularly adapted for use on self-propelled vehicles to indicate intended changes of direction thereof.

An object of the invention is to provide a signal device of the class described wherein is afforded a maximum use of the light for illuminating the symbols of the signal with a minimized heat loss and effect.

Another object of the invention is to provide plural means for illuminating the symbols whereby any one of said means may alone illuminate all the symbols.

A further and more specific object is to provide for the aforesaid illumination of the symbols by means of electric lamps connected in parallel in the same circuit whereby one light may operate without the other, and a burned-out light does not completely incapacitate the signal.

Yet another object is to bring about a new combination and correlation of parts in a device of the class described whereby marked economies in manufacture will be effected and the efficiency of the device will be enhanced.

The invention possesses other objects and features of advantage, some of which, with the foregoing, will be set forth or be apparent in the following description of typical forms of the invention which are illustrated in the accompanying drawings, in which:

Figure 1 is a rear face view of a signal embodying the invention.

Figure 2 is a fragmentary and transverse section of the signal structure at 2—2 in Figure 1.

Figure 3 is a fragmentary and generally diagrammatic view which shows the signal mounted on a vehicle and also shows an operating circuit for the signal.

Figure 4 is a view of a modification of the signal, the view corresponding generally to that of Figure 2.

As particularly disclosed in Figures 1 and 2, the present invention is incorporated in the structure of a signal 5 comprising a tubular and light-tight casing 6 having more or less transparent disc-shaped end members 7 and carried on a bracket 8 for mounting in position for use. The members 7 are arranged to be held in place at the ends of the casing by reason of their engagement between rims 9 mounted on the casing ends and the opposed ends of a reflector element 11 disposed in the casing cavity, it being noted that the exact structure of this assembly is generally immaterial to the present invention. A double electric lamp socket 12 is provided in the casing, and lamps 13 are provided in the socket 12 for illuminating the members 7 in a manner to be hereinafter brought out.

The members 7 may have signal significance by reason of their color alone or may be provided with symbol characters 14 which are arranged to be defined when the appropriate lamps 13 are lit. These symbols may be incorporated in the structure of the members 7, as shown, may be defined by stencil plates disposed against the members 7, or may be painted on faces of the members. The members 7 may be lens-shaped, though they are plane in the present instance. Since the members 7 are essentially designed to define symbols when illuminated from within the casing, they are seen to essentially function as transparencies and will hereinafter be so referred to. In the present instance, the device is intended for use as a left-turn signal, and the symbol characters 14 are seen to include an appropriately directed arrow and a letter L above the arrow.

Preferably, and as shown, the socket 12 is arranged to dispose the lamps 13 with their centers of illumination in the axial line of the casing and at equal distances from the transparencies 7. As in double sockets generally, the socket 12 is arranged to connect the lamps 13 in a common energizing circuit and in parallel relation, whereby either lamp may be lit independently of another, and the burning out of one lamp does not affect the other. By reference to Figure 2, each lamp is seen to be independently operative to distribute light to both transparencies, whereby a burning out of one of two lighted lamps does not render the signal inoperative. This fea-

ture is seen to be an important one from the standpoint of safety, for the signal continues to operate with one lamp until a replacement of the burned-out lamp may be conveniently effected.

As indicated in Figure 3, the signal 5 is mounted at the left side of a vehicle body 15 and the lamp socket 12 is connected in a grounded circuit 16 including a normally open switch 17. The switch 17 would be disposed within reach of the operator of the vehicle 16 for manipulation when and as desired.

It will now be noted that a certain part of the light emanating from each lamp 13 is directed toward the casing walls and would become lost as useful light if not redirected toward the transparencies 7. Accordingly, the reflector element 11 has been provided and said element is so formed and disposed that all of the light emanating from one or both lamps in directions other than toward the transparencies is reflected to one or the other of the transparencies. Preferably, and as shown, the element 11 comprises like sections 18 providing concave reflecting surfaces 19 and centrally perforated opposite the lamps to permit the aforesaid distribution of light from each lamp to both transparencies. The sections 18 are coterminous at their perforation edges with their reflection surfaces intersecting or tangent thereat. Each of the sections 18 is, of course, perforated to permit the extension of a socket arm therethrough.

The reflecting surfaces of the reflector sections may be variously shaped; preferably, the form of these surfaces is such that light received on either from the lamp nearest thereto is directed generally axially to the adjacent transparency. Since the direct illumination of the transparencies will be greater at their centers, the reflected light is preferably directed more or less toward the edges of the transparencies; such a condition is indicated in Figure 2, wherein each reflecting surface 19 is substantially spherically curved and the lamp thereat is so disposed with respect to the center of curvature of the said surface as to produce the aforesaid distribution of reflected light. As shown, the common edge 21 formed at the juncture of the two reflector sections 18 defines a plane which perpendicularly bisects the line of centers of the lamps; the sections 18 are preferably unitarily fixed together at the edge 21. The free edges 22 of the sections provide flanges for engagement against the transparencies.

Preferably, and as shown, the opening defined within the edge 21 is of such size that little, if any, light will pass therethrough from a given lamp to the reflector for the other lamp. For this reason, and the fact that neither lamp is equidistant from both transparencies, the transparencies will not be equally illuminated by either lamp alone, and the fact that but one lamp is lit will be externally evidenced. It will generally be desirable that both lamps be lit, yet if a difference in illumination of the two transparencies should be desired, but one lamp would be installed in the appropriate socket arm; in the latter case, the protection offered by the simultaneous use of two lamps is, of course, lost.

The structure of the signal light 5′ shown in Figure 4 is seen as a modification of the first described embodiment and provides for the use of but one lamp 13′ in a single socket 12′. The reflector 11′ is seen to be formed generally as the reflector 11, except that the extension of the socket 12′ therethrough requires but a single opening therefor. In this embodiment, the lamp 13′ is disposed centrally in the casing cavity and in the plane of the edge 21′ defined at the juncture of the reflector sections. In this manner, the one lamp equally illuminates the two transparencies 7′ and the light from the lamp which strikes the reflector is equally divided between the two transparencies.

In view of the foregoing, it is obvious that in both of the described embodiments, a minimum of the energy emanating from the lamps is permitted to be dissipated as heat within the signal light casing, while a maximum, and most efficient, application of the light is afforded whereby to accomplish a major purpose of the invention.

From the foregoing description taken in connection with the accompanying drawings, the advantages of the construction and method of operation will be readily understood by those skilled in the art to which the invention appertains, and while I have described the principle of operation, together with the device which I now consider to be the best embodiment thereof, I desire to have it understood that the device shown is merely illustrative, and that such changes may be made, when desired, as fall within the scope of the appended claims.

Having thus described my invention, I claim as new and desire to secure by Letters Patent of the United States the following:

1. In a signal means, a tubular light-tight casing, transparencies at opposite ends of said casing arranged when illuminated to have signalling significance, a pair of independent sources of light disposed in said casing in mutually spaced relation axially of the casing and each unequally spaced from the different transparencies, and an axially perforated reflector disposed in said casing operative to distribute all of the light emanating from either said source in directions other than toward the transparencies to said transparencies in unequal proportions.

2. In a signal, a tubular casing, transparencies at opposite ends of said casing, a pair of light sources axially aligned in the casing

axis, and concave reflector means cooperative with said light sources to direct toward the transparencies the light which emanates from said sources in directions other than toward the transparencies, said reflectors being perforated axially opposite the said light sources to permit light from each said source to illuminate both transparencies.

3. In a signal, a tubular casing, transparencies at opposite ends of said casing for illumination as signals, a pair of light sources axially aligned in the casing axis, and concave reflectors cooperative with said light sources to direct toward the adjacent transparencies the light striking the same from the corresponding said sources, said reflectors being perforated axially opposite the said light sources and being coterminous at their perforations to define a plane of intersection transverse to the casing axis and lying between said light sources.

In testimony whereof, I affix my signature.

MANUEL S. SILVA.