Dec. 15, 1964 J. A. HARRISON ETAL 3,161,044

INDICATING LOAD ECCENTRICITY IN FORGES

Filed Nov. 7, 1962 2 Sheets-Sheet 1

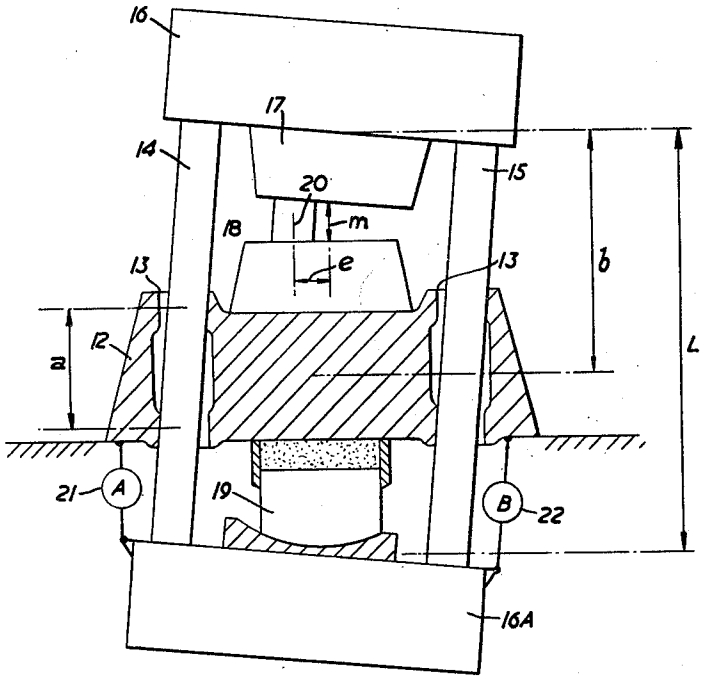

FIG. 1.

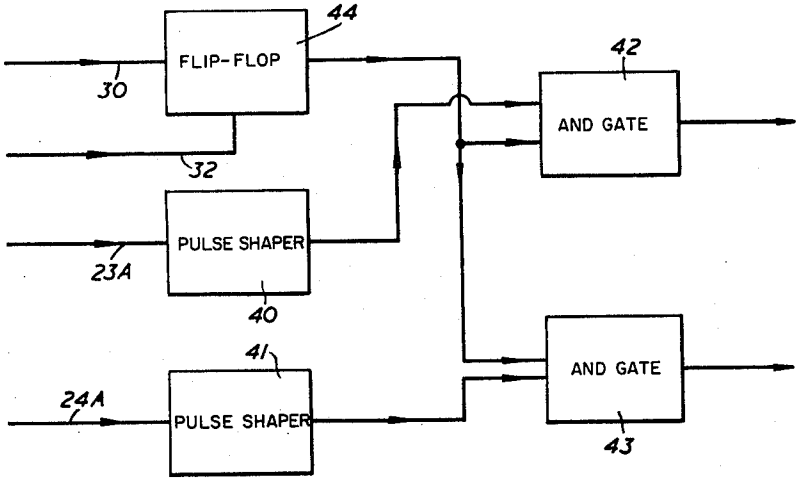

FIG. 3.

INVENTORS
J. A. Harrison
O. R. Howard
BY Holcomb, Dethmers & Bruins
ATTORNEYS

Dec. 15, 1964 J. A. HARRISON ETAL 3,161,044

INDICATING LOAD ECCENTRICITY IN FORGES

Filed Nov. 7, 1962 2 Sheets-Sheet 2

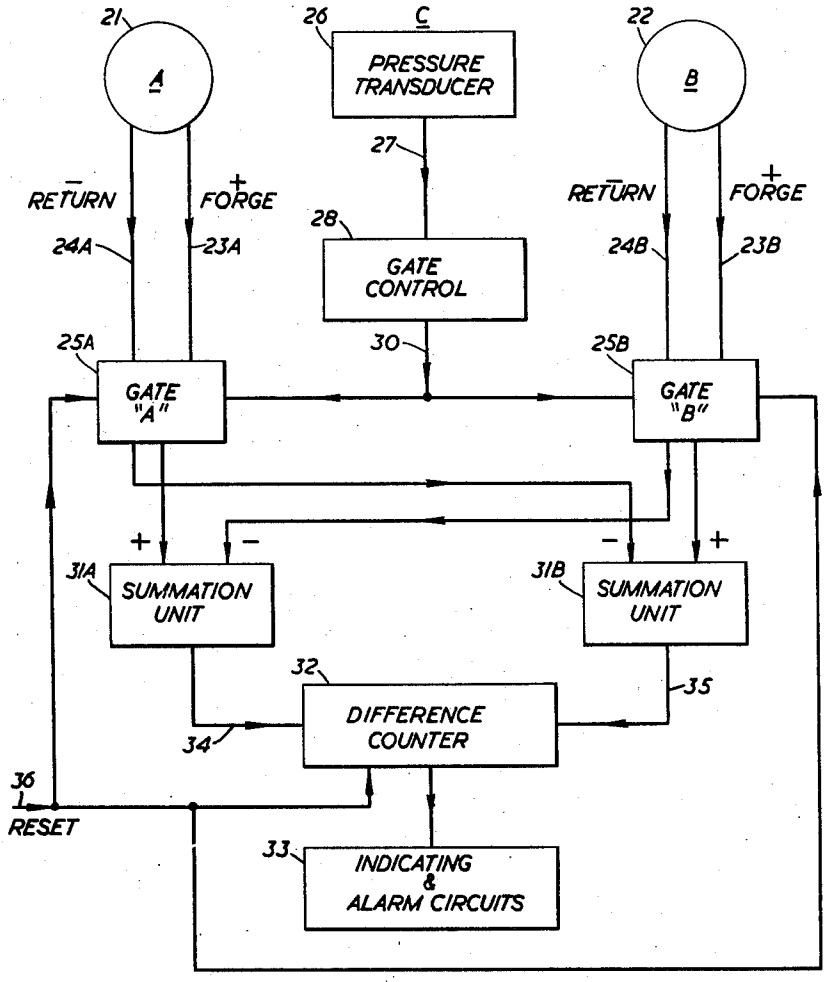

FIG. 2.

INVENTORS
J. A. Harrison
D. R. Howard

BY
Holcomb, Wetherill & Brisebois

ATTORNEYS

United States Patent Office 3,161,044 Patented Dec. 15, 1964

3,161,044

INDICATING LOAD ECCENTRICITY IN FORGES

James Arthur Harrison, Chesterfield, and David Robert Howard, Sheffield, England, assignors to Davy and United Engineering Company Limited, Yorkshire, England

Filed Nov. 7, 1962, Ser. No. 235,927
Claims priority, application Great Britain, Nov. 8, 1961, 39,970/61
7 Claims. (Cl. 73—88)

This invention relates to the behaviour of forging presses when eccentrically loaded.

A forging press has effectively a movable part and a fixed part, each carrying a press tool, the arrangement being such that a workpiece is forged between the press tools by relative movement of the movable and the fixed parts. Certain kinds of forging presses may be considered to comprise a crosshead, and a frame comprising an upper and a lower entablature joined together by columns which pass through the crosshead; either the frame may be fixed and the crosshead movable, or the crosshead may be fixed and the frame movable: the invention is applicable to both of these kinds of forging presses.

A forging press may be said to be concentrically loaded when the line of action of the resultant force acting between the press tools and the workpiece coincides with a line which is parallel to and equidistant from the axes of the columns of the forging press (this latter line will be referred to hereinafter, for convenience, as "the axis of symmetry of the forging press").

When a forging press is concentrically loaded, its columns are subjected to tensile stresses. Further, its columns are subjected to bending stresses, to be referred to herein for convenience as "secondary bending stresses"; these bending stresses are associated with simultaneous bowing of the entablatures and of the columns, when the forging press is under load. For the majority of forging presses, these secondary bending stresses are relatively small compared with the tensile stresses in the columns, because of the relatively large resistance of the entablatures to bowing.

A forging press may be said to be eccentrically loaded when the line of action of the resultant force acting between the press tools and the workpiece does not coincide with the axis of symmetry of the forging press. The degree of eccentric loading may be taken to be proportional to the eccentric bending moment, that is to say to the product of the resultant force acting between the press tools and the workpiece, and the load eccentricity e (the distance between the line of action of the resultant force just mentioned, and the axis of symmetry of the forging press).

When a forging press is eccentrically loaded, its columns are subjected to the tensile stresses and secondary bending stresses mentioned above. The columns are also subjected to additional bending stresses, to be referred to hereinafter as "primary bending stresses." These primary bending stresses may be relatively large compared with the tensile stresses which, as mentioned above, are in turn normally relatively large compared with the secondary bending stresses. The primary bending stresses are capable, if sufficiently large, of fracturing the columns of the press.

An object of the invention is to provide an indication that a forging press is eccentrically loaded. Other objects are to provide an indication of the degree of eccentric loading of a forging press, and optionally to operate an alarm or initiate corrective action if the degree of eccentric loading becomes excessive; and to provide an indication of the magnitude of the primary bending stresses to which the press columns are subjected when the press is

eccentrically loaded, and to operate an alarm or initiate corrective action if the primary bending stresses become excessively large.

In accordance with the invention apparatus for giving an indication of the eccentric loading of a forging press comprises detecting means for detecting change of tilt of the movable part of the press, means for rendering effective the detecting means only when the applied load exceeds a prescribed value, and means operated by the detecting means for indicating the change of tilt occurring after the prescribed value has been exceeded. Thereby, on eccentric loading occurring, the clearances between the columns and their guides are taken up before the full forging load is applied; as a consequence, the indication given represents the change in tilt occurring after the clearances have been taken up.

In a preferred form of the invention, apparatus for giving an indication of the eccentric loading of a forging press comprises first detecting means for detecting the movement of a first point on the movable part of the press displaced from the axis of symmetry of the press, second detecting means for detecting the movement of a second point on the movable part, the first and second points being located on opposite sides of the axis of symmetry, means responsive to the load applied by the press for rendering effective the first and second detecting means and means controlled by the detecting means for comparing the detected movements of the two points after the detecting means are rendered effective.

The invention will more readily be understood by way of example from the following description of one form of apparatus for continuously indicating the eccentric loading of a forging press, reference being made to the accompanying drawings, in which:

FIGURE 1 is a simplified sectional view of a forging press,

FIGURE 2 is a schematic circuit diagram, and

FIGURE 3 illustrates one of the gates 25.

Referring to FIGURE 1, the forging press comprises a fixed crosshead 12 having guide passages 13 for the two columns 14, 15 of the frame, the movable part of the press. These columns are joined by the upper entablature 16 and the lower entablature 16A. Hydraulic rams, of which one is indicated at 19, reciprocate the frame relative to the fixed crosshead 12. Both the upper entablature 16 and the fixed crosshead 12 carry tools 17, 18 respectively, between which the workpiece 20 is forged.

FIGURE 1 shows the frame in tilted disposition, due to the eccentric position of the workpiece between the tools 17, 18. As the upper tool 17 descends on to the workpiece 20, the frame tilts so that the columns 14, 15 first engage against the sides of the guide passages 13, thereby taking up the clearances between the columns and the guide passages, and thereafter, when the forging pressure is applied, the moving part tilts further with elastic deformation of the press structure. The angle of tilt of the moving part from the position in which the clearances are taken up is substantially proportional to the degree of eccentric loading of the press.

In order to continuously monitor the tilt of the frame relatively to the cross head, there are two pulse generators 21, 22 arranged to measure respectively the separations of the lateral extremities of the lower entablature 16A from the fixed cross head 12. Turning to FIGURE 2, each of the pulse generators 21, 22 produces on the lines 23A, 23B respectively a pulse for each unit of movement of the respective side of entablature 16A in the forging direction, that is to say for each unit of downward movement of the entablature 16A. Similarly, the pulse generators 21, 22 produce on the lines 24A, 24B respectively a pulse for each unit of movement of the respective side of entablature 16A in the return direction,

that is to say for each unit of upward movement of the entablature 16A. The pulses on lines 23A, 24A are applied to a gate 25A, while the pulses on lines 23B, 24B are applied to a similar gate 25B. The two gates 25A, 25B are under the control of a pressure transducer 26 which is subject to the pressure of the hydraulic system operating the forge, and which produces on line 27 an electrical signal representing that pressure. The signal on line 27 is applied to a gate control 28 which emits a gating voltage on line 30 when the pressure in the hydraulic system exceeds a prescribed amount. The gating voltage on line 30 is applied to gates 25A, 25B to permit the pulses from the pulse generators 21, 22 to pass through.

There are two summation units 31A, 31B. Unit 31A receives the pulses on lines 23A and 24B when the gates 25A and 25B are opened, and transmits these pulses together, via a common line 34, to a first input of a difference counter 32. Similarly, the summation unit 31B receives the pulses from lines 23B, 24A when the gates 25A and 25B are opened, and transmits these together, via a common line 35, to a second input of the difference counter 32. The output of the difference counter 32 continuously represents the difference between the total number of pulses reaching its first input via the line 34, and the total number of pulses reaching its second input via the line 35. This output is a measure of the relative tilt of the fixed and movable parts of the press, after the hydraulic pressure has exceeded the prescribed value, and is continuously applied to an indicating and alarm circuit 33.

The prescribed value of the pressure is selected so that the pressure rise occasioned when the forging of the workpiece 20 starts is sufficient to operate gate control 28 and thereby open gates 25A, 25B. The indicating circuit 33 then represents the tilt occurring after the clearances between the columns 14, 15 and the guides 13 have been taken up and hence the eccentric loading of the press, as explained above. The circuit 33, as well as indicating the tilt, may also operate an alarm circuit and/or reverse the motion of the press, when the tilt and hence the eccentric loading of the press exceeds a safe value.

A typical example of the operation of the arrangement will now be described. Suppose that the entablature 16A is moving downwards, upon commencement of a forging stroke. If the press is eccentrically loaded, and if the clearances referred to exist, then when the tools 17 and 18 commence to engage the workpiece 20, the entablature 16A tilts as shown in FIGURE 1, taking up these clearances. Thereafter, when the said hydraulic pressure reaches the prescribed value, the gates 25A and 25B open as described above.

Suppose the entablature 16A now descends a certain distance, without alternation of that degree of tilt of the entablature 16A which existed when the gates 25A and 25B were opened. Suppose that, during this period, 10 pulses are produced by each of the pulse generators 21 and 22, and pass respectively along the lines 23A and 23B. Ten pulses therefore pass through the gate 25A and the summation unit 31A, to the first input of the difference counter 32; similarly, 10 pulses pass through the gate 25B to the second input of the difference counter 32. Since the difference counter therefore receives ten pulses at each input, its output will remain zero, indicating that no additional tilt of the entablature 16A has occurred.

Suppose that, next, the entablature 16A is forced to tilt, so that (referring to FIGURE 1), its right-hand side descends by a distance equivalent to two pulses, while its left-hand side rises by a distance equivalent to two pulses. Two pulses are therefore produced by the pulse generator 22 and pass, via the line 23B, the gate 25B and the summation unit 31B, to the second input of the difference counter 32. Further, two pulses produced by the pulse generator 21 pass, via the line 24A, the gate 25A, and the summation unit 31B, also to the second input of the difference counter 32. The difference counter 32 thus receives a total of four pulses at its second input, but receives no pulses at its first input; the output of the difference counter will thus indicate a tilt of the entablature 16A of an amount corresponding to four pulses. If such a tilt equals or exceeds the predetermined maximum safe value, then an alarm will be automatically given, and/or the motion of the press will be automatically reversed.

The eccentric loading of the press may affect the primary bending stresses in the columns 14, 15 to a degree dependent upon the vertical position of the movable part of the press relative to the fixed part. In this case, the separation b of the upper entablature 16 and the fixed crosshead 12 may be continuously monitored and applied to modify the operation of the circuit 33, to give a signal more truly representative of the magnitude of the primary bending stresses in the columns.

On the reversal of the press, at the conclusion of the forging stroke, a reset signal is applied to line 36, in order to reset to zero the count in the difference counter 32 and in order to reclose the gates 25A, 25B in preparation for the next forging stroke.

So far, the description has been restricted to a 2-column press. In the case of a 4-column press, there are preferably four pulse generators, for measuring the separation of the four corners of the entablature 17 from the fixed cross head. The outputs from the four pulse generators are utilised in the manner indicated in FIGURE 2 in order to obtain indications of the degree of eccentric loading of the press in two mutually perpendicular planes.

Each of the pulse generators 21, 22 is preferably a pulse generator manufactured by Grunther Industrial Developments Limited, as Standard Type DD–133, but may be of any form which gives on two separate lines pulse outputs for movement in opposite directions. Thus, each may be a digital transducer giving the necessary pulse output immediately, or may be of the analogue type, for example a magslip or synchro transmitter-receiver system or a potentiometer, coupled to an analoque to digital converter to supply the necessary pulse output. In either event, the pulse generator may be located on the fixed crosshead 12 and coupled to the respective side of the entablature 17 by means of a chain or a lead screw.

FIGURE 3 illustrates the gate 25A, it being understood that gate 25B is similar. Two pulse shapers 40, 41 receive the add and subtract pulses on lines 23A, 24A respectively from the pulse generator 21 and emit outputs individually to two input AND gates 42, 43. The rise time of these outputs is such as to ensure that reliable triggering results from them and the voltage output level is correct for feeding the AND gates 42, 43.

A flip-flop 44 is connected to the second input of each AND gate 42, 43 so that its voltage level keeps the AND gates closed until it receives on line 30 a pulse from the gate control circuit 28. That pulse triggers flip-flop 44 into its second stable state and opens the AND gates until a reset pulse is received on line 32.

Suitable elements for the gates 25 are the following, made by Mullard Equipment Limited and described in their publication entitled "Electronic Sub-Assemblies for Control and Instrumentation":

Pulse shapers 40, 41—Type P.S.1.
Flip-Flop 44—Type F.F.1
AND gates 42, 43—Type 22A1.

The gate control 28 is preferably a conventional limiting amplifier which gives an output when the output from the pressure transducer 26 rises to a value indicating that the forging of the workpiece has started. The summation units 31A, 31B may be simple two-input OR gates such as those sold by Mullard as "Type 2201," while the difference counter 32 may be as shown in the Mullard publication "Sub-Assemblies Bulletin No. 4" at FIGURE 2

with decoding circuits similar to that shown at FIGURE 8 of the same publication.

Where the pulse generators measure the separation between parts of the press between which relative movement occurs due to strain of the press when the press is operated to stress an object being forged, the apparatus may be modified as described in British patent specification No. 21632/61.

We claim:

1. Apparatus for giving an indication of the eccentric loading of a forging press comprising means for measuring change of tilt of the movable part of the press, means for rendering effective the measuring means only when the load applied by the press exceeds a prescribed value, and means operated by the measuring means for indicating the change of tilt occurring after the prescribed value has been exceeded.

2. Apparatus for giving an indication of the eccentric loading of a forging press comprising first detecting means for detecting the movement of a first point on the movable part of the press displaced from the axis of symmetry of the press, second detecting means for detecting the movement of a second point on the movable part, the first and second points being located on opposite sides of the axis of symmetry, means responsive to the load applied by the press for rendering effective the first and second detecting means, and means controlled by the detecting means for comparing the detected movements of the two points after the detecting means are rendered effective.

3. Indicating apparatus according to claim 2 in which each detecting means comprise a device giving a digital pulse output for each unit movement of the respective point and a gate to which the output is applied and which is controlled by the means responsive to the applied load.

4. Indicating apparatus according to claim 3 in which each gate is operatively connected to said comparing means, whereby said pulse outputs passed by the gates are compared.

5. Indicating apparatus according to claim 3 in which the device gives a first pulse output for movement of the movable part towards the work and a second pulse output for movement away from the work, and in which there is an adding circuit for each device to which the first output of respective device and the second output of the other device are applied, the sum outputs from the two adding circuits being applied to the comparing means.

6. Indicating apparatus according to claim 5 in which the comparing means comprise a difference counter arranged to give an output according to the difference in the numbers of pulses received from the adding circuits.

7. Indicating apparatus according to claim 2 in which the press is hydraulically operated and the means responsive to the applied load comprises a pressure transducer which responds to the pressure in the hydraulic supply to the press and gives a signal when that pressure exceeds a prescribed value.

References Cited by the Examiner

UNITED STATES PATENTS

753,015	2/04	Tretch	73—94
2,343,167	2/44	Bench	100—258
2,565,639	8/51	Waldie	100—46
2,636,433	4/53	Wennberg.	
2,821,907	2/58	Stone.	
3,008,323	11/61	Charbonnier et al.	73—290 X

RICHARD C. QUEISSER, *Primary Examiner.*

JOSEPH P. STRIZAK, *Examiner.*