July 21, 1936. J. M. FOSTER 2,048,498

APPAREL BELT

Filed June 21, 1935

Fig. 1.

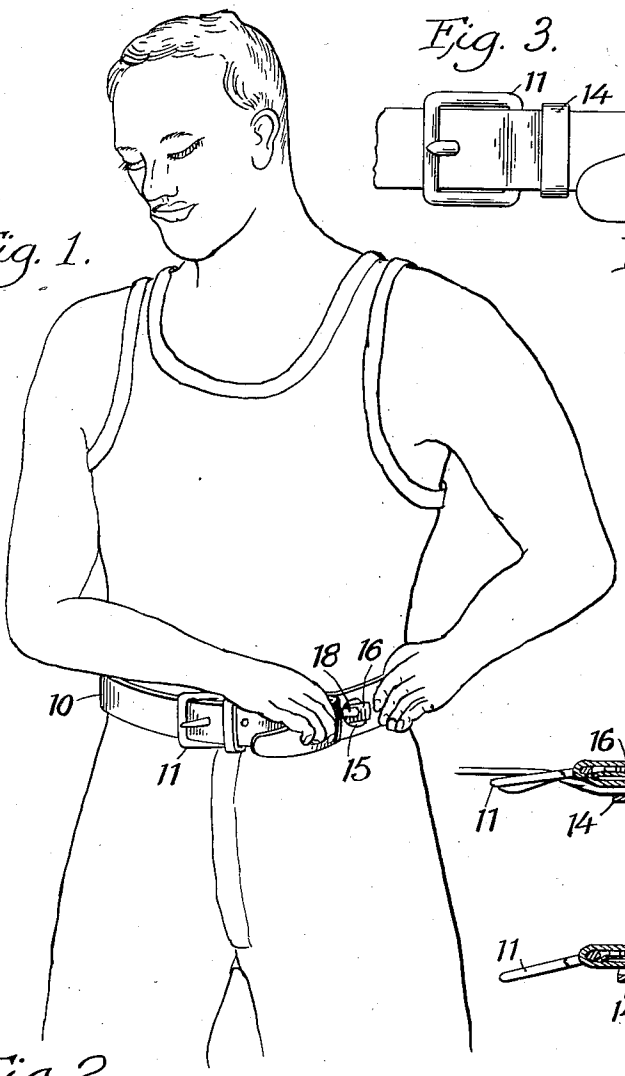

Fig. 3.

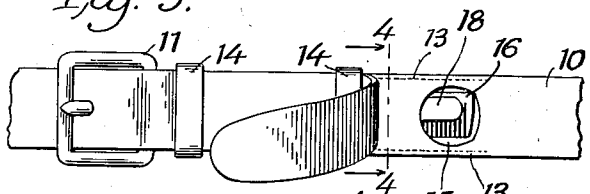

Fig. 4.

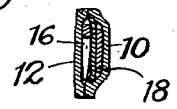

Fig. 5.

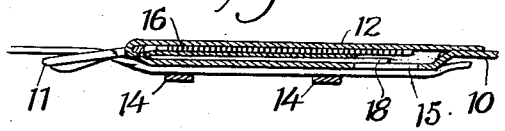

Fig. 6.

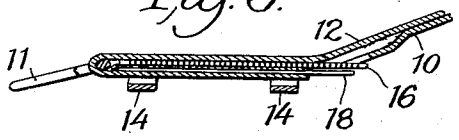

Fig. 2.

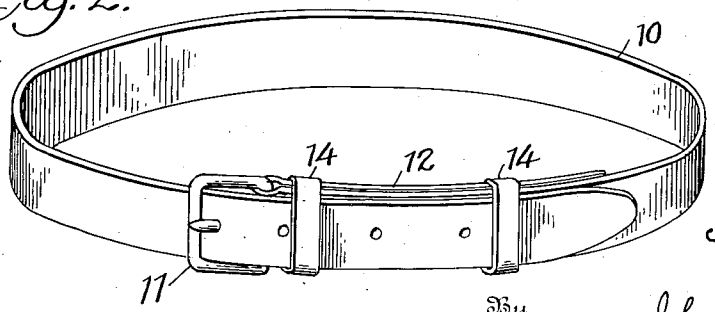

Inventor,
James M. Foster,
By John W. Farley
Attorney

Patented July 21, 1936 2,048,498

UNITED STATES PATENT OFFICE

2,048,498

APPAREL BELT

James Madison Foster, Memphis, Tenn.

Application June 21, 1935, Serial No. 27,787

7 Claims. (Cl. 241—8)

My invention relates to a belt for personal wear and it is an object thereof to provide, in combination with such a belt, means for supporting toilet articles such as are of frequent use and yet cannot conveniently be carried about in other ways.

Another object of the invention is to provide such supportng means in such a way that there shall be little or no danger of loss of the toilet articles yet they shall be readily available for use.

Another object of the invention is to provide means for covering and concealing the toilet articles in general except when they are to be withdrawn from their supporting means, whereby also they are kept from being entangled with articles of clothing or other adjacent objects.

Another object is to provide the supporting means in such form and position that the user does not have to look at the toilet articles in removing or replacing them.

Referring to the drawing, which is made a part hereof and in which similar characters of reference indicate similar parts;

Fig. 1 is a view illustrating the use of the belt,

Fig. 2, a perspective of a preferred form of the same,

Fig. 3, an elevation of a part of the belt,

Fig. 4, a section on line 4—4 of Fig. 3,

Fig. 5, a partial longitudinal section of the belt, and

Fig. 6 a similar section showing the parts in a different position.

In the drawing, reference character 10 indicates the body portion of an apparel belt, said belt, in the form at present deemed preferable, being made of a single thickness of leather or other suitable material, although I do not limit myself to any particular material or shape of belt. In the form shown in the drawing the belt has a buckle 11 which is held in place in usual manner by doubling back a portion 12 and securing it to the body portion 10. As here shown this is done by means of the seams 13, 13 along the parallel edges of the two portions.

The free end or tongue of the belt passes through the buckle when in use and then through one or more loops 14 as usual and the preferred dimensions are such that said free end covers an aperture at 15, which aperture extends through the body portion of the belt. The space between the portions 10 and 12 intermediate seams 13, 13 provides a pocket for a comb 16 or the like toilet article, the pocket opening into the aperture 15. The relative dimensions are such that when the tongue of the belt is drawn outward away from the body of the user, as in Figs. 1 and 6, the end of the comb will project outward so as to be readily grasped and withdrawn from its pocket. In order to provide space for the comb the body portion of the belt is reduced in thickness between the seams 13, 13 as shown in Fig. 4, this serving also to prevent the belt from pinching the comb so as to make it difficult to withdraw.

A second pocket is formed in the material of the body of the belt by slitting or stabbing a longitudinal incision therein splitting the body portion 10 for a short distance between the seams 13, 13, this pocket being intended to receive a toilet article such as a nail file 18. The depth of the incision is such that the end of the file projects into the aperture 15 into which the incision opens, and therefore this end will protrude from the aperture when the tongue of the belt is drawn away from the body of the user, as in Figs. 1 and 6, so that it can readily be grasped and withdrawn from its pocket. It will be noted that both of the articles herein specifically mentioned are flexible, so that they can yield to the shape and to the movements of the body of the wearer of the belt without danger of breaking.

It will be obvious to those skilled in the art that many changes may be made in the device shown in the drawing and described in the specification and therefore I do not limit myself to what is so shown and described, the true scope of the invention being indicated by the appended claims.

Having thus fully described my said invention, what I claim is:

1. A belt for personal wear comprising a buckle, a ply forming the outer belt portion and extending the full length of the belt, a doubled-back portion adjacent said buckle said portion being arranged to lie against the body of the wearer and having its side edges secured to the outer belt portion, there being an aperture through said outer belt portion said aperture leading to a space between said belt portions, thus providing a pocket extending lengthwise of the belt and opening to the outer face of the belt when the same is in use.

2. A belt for personal wear comprising a buckle, a doubled-back portion adjacent said buckle said portion being arranged to lie against the body of the wearer and having its side edges secured to the outer belt portion, there being an aperture through said outer belt portion lead-

ing to a space between said belt portions, thus providing a pocket extending lengthwise of the belt and opening to the outer face of the belt when the same is in use, the parts being so proportioned that the free end of the belt normally covers said aperture when the belt is in use, and the belt having a loop near the aperture and between the same and the buckle, as and for the purpose set forth.

3. A device as in claim 1, including a pocket in the material of said outer belt portion, said pocket also opening into said aperture.

4. In combination, an apparel belt having a buckle, a bent-back buckle-holding portion seamed to the inner side of the main belt portion, there being an aperture in said main belt portion leading to the space between said portions, and a toilet article in the pocket so formed, the length of said article being so related to the depth of said pocket as to cause the end of said article to protrude into said aperture.

5. An apparel belt comprising a buckle, a body having a plurality of plies with their longitudinal margins secured together, said belt having an aperture through the outer ply, said aperture providing the sole access to a pocket lying between the plies and being positioned to be covered by the tongue of the belt when the same is in use, and means between the aperture and the buckle for holding the tongue.

6. A belt for personal wear comprising a buckle and an outer ply doubled back adjacent the buckle to provide a portion lying against the body of the wearer and secured to the outer part of the belt at its edges to provide a pocket extending lengthwise of the belt, there being an aperture through said outer portion leading to said pocket and said aperture being so located as to be normally covered by the tongue of the belt when the belt is in use.

7. A belt for personal wear comprising a buckle, a body portion to which said buckle is secured, said body portion having a round transverse aperture adjacent said buckle and having in its material a slit parallel to the inner and outer faces of the belt, said slit opening into said aperture and being of suitable size to receive a nail file or the like and to hold the same in place by friction.

JAMES MADISON FOSTER.