W. H. PALMER.

END GATE FOR WAGONS.

APPLICATION FILED JULY 2, 1906.

902,319. Patented Oct. 27, 1908.

FIG. 1.

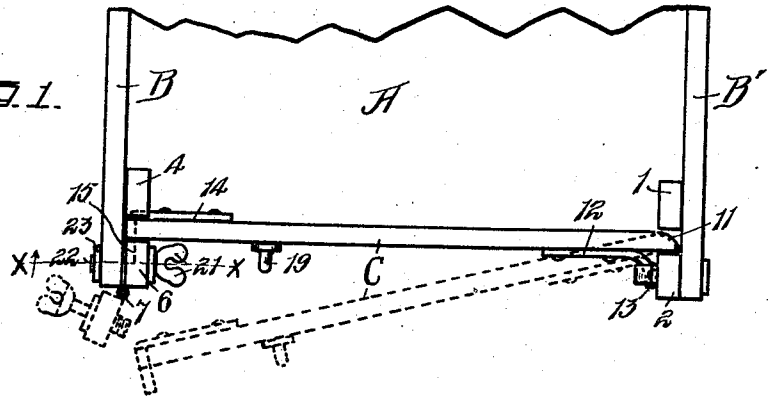

FIG. 2.

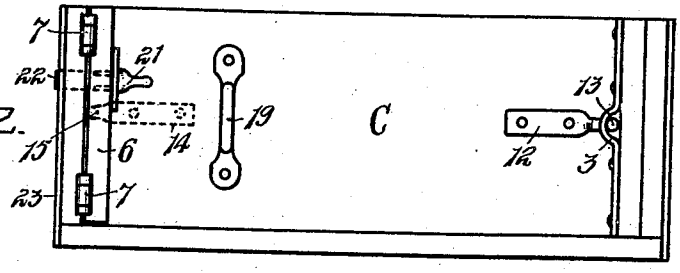

FIG. 3.

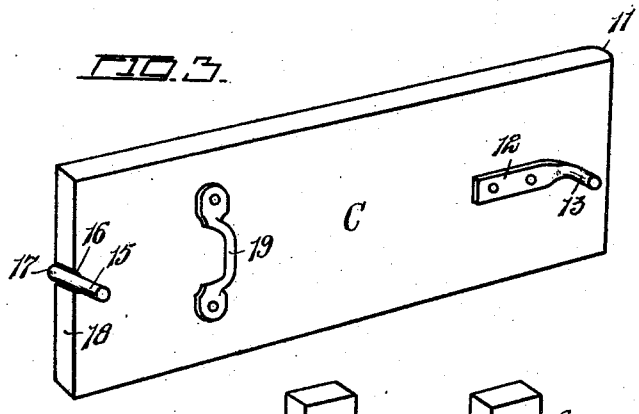

FIG. 4.

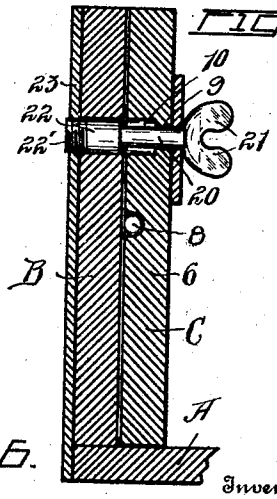

FIG. 5.



FIG. 6.



Witnesses

Grace E. Gatewood.

Catharine Z. Crenshaw.

Inventor

William H. Palmer.

By F. J. Lawson & Co.

Attorneys.

THE NORRIS PETERS CO., WASHINGTON, D. C.

UNITED STATES PATENT OFFICE.

WILLIAM H. PALMER, OF COUNCIL BLUFFS, IOWA.

END-GATE FOR WAGONS.

No. 902,319. Specification of Letters Patent. Patented Oct. 27, 1908.

Application filed July 2, 1906. Serial No. 324,342.

To all whom it may concern:

Be it known that I, WILLIAM H. PALMER, a citizen of the United States, residing at Council Bluffs, in the county of Pottawattamie and State of Iowa, have invented certain new and useful Improvements in End-Gates for Wagons, of which the following is a specification.

My invention relates to certain improvements in end-gates for wagons; and has for its object to provide an inexpensive, durable, and efficient device of this character which will be effective for the purpose designed.

With these and other objects in view, the invention consists in the construction and novel combination and arrangement of parts hereinafter fully described, illustrated in the accompanying drawings and pointed out in the claims herewith appended, it being understood that various changes in form, proportion and minor details of construction may be resorted to without departing from the principle or sacrificing any of the advantages of the invention.

Referring to the accompanying drawings, wherein like characters of reference denote similar parts throughout the several views:—Figure 1, is a plan view of the rear end of a wagon-box with my improved end-gate and parts applied thereto. Fig. 2, is an end view thereof. Fig. 3, is a perspective view of the end-gate. Fig. 4, is a transverse-section of the side-board, and hinged cleat taken on line X—X of Fig. 1, showing the means for locking said hinged cleat. Fig. 5, is a detail perspective view of one of the cleats, while Fig. 6, is a detail perspective view of the hinged cleat.

In the drawings, A, designates a wagon-box having the ordinary side-boards B, and B′.

On the interior side and near the end of the side-board B′, are rigidly secured the cleats 1 and 2, which run parallel to one another and spaced far enough apart to allow one end of the end-gate to work therebetween, as clearly shown. The cleat 2 is provided upon its interior side with the loop strap 3, the object of which will be described hereinafter.

Similar to cleat 1 and located in a corresponding position on the interior of the opposite side-board B, is the cleat 4 which is provided with recesses or cut-out portions 5. To the rear of this cleat 4 and occupying the same relative position to cleat 4 which cleat 2, does to cleat 1, is the cleat 6, which is hinged to the side-board B, as shown in Figs. 1 and 2 by means of suitable hinges 7. This cleat 6 is provided with the recess or grooved part 8, and the opening 9 which decreases in diameter as at 10.

The end-gate C, it will be noticed has one of its corners rounded or beveled as at 11, so that in turning the end-gate and taking it out, this corner of the end-gate will not interfere with cleat 1, as clearly shown in Fig. 1. This end-gate is provided upon its exterior side and the right hand end with the L shaped strap 12, having the rounded and curved end 13, which passes through the looped strap 3 and engages the same thus acting as a hinge for the end-gate to swing on, and further prevents the side-board B′ from spreading outward.

Similar to strap 12 and secured upon the interior of the end-gate C is the L shaped strap 14 having its angular end rounded as at 15. This strap it will be observed, has its rounded end pass through the end-gate as shown at 16, so that this end will work within the recess or groove 8, and engage the rounded surface of cleat 6, thus preventing spreading of side-board B. The corner 17, of this strap 14, lies within the recess 15, of cleat 4 when in a locked position as shown in full lines in Fig. 1. The rounded end 15, is embedded in the end of the end-gate C, as clearly shown in Fig. 3, so that the outer surface thereof will not extend beyond the surface 18, of the end-gate C. The end-gate C, is further provided upon its exterior side and near the left end with the hand hold or strap 19, so that the operator may easily and readily swing the end-gate outward by means of this hand-hold.

I will now describe the means for locking the hinged cleat in a locked position. The locking means consists of bolt 20, having the screw-threaded enlarged end 21, the remaining half of the bolt is reduced in diameter to extend through the small or reduced opening 10, and is provided with the head 21, so that the head may be grasped and turned to either lock or unlock the hinged cleat. The enlarged end 22, of the locking-bolt having the threaded end 22′, passes through an opening in the side-board B and is screwed into the wagon-box strap 23 as clearly shown in Fig. 4. It is impossible for this bolt to become lost as the enlarged end 22, of the bolt, works within the large

opening 9, while the reduced end within a smaller opening 10, thus making it impossible for the large end to pass through opening 10. The bolt cannot fall out from the opposite side as the head is too large to pass through the opening.

The operation of the device will be readily understood from the foregoing description and may be briefly stated as follows: The operator in opening or to take out the end-gate turns the head 21, to the left, thereby releasing the threaded end 22′ from the threaded opening in box-strap 23, the hinged cleat is then opened or turned to position indicated in dotted lines in Fig. 1, when operator then takes hold of the handle or hand-hold 19, and swings end-gate outward as shown in Fig. 1 in dotted lines. It should be observed that in swinging the end-gate, the round end 13, of strap 12, acts as a hinge as the end-gate swings on it, by reason of the rounded end passing through the looped box-strap 3. In placing the end-gate on the end of the wagon, the operator inserts the round end 13 of strap 12 through the looped portion of strap 3, swings the opposite end of end-gate in until the interior side engages cleat 4, when the cleat 6, is then closed and locked as clearly shown in Figs. 1 and 4. It should also be observed that by means of the straps 12 and 14 that it is impossible for the side-boards B and B′, of the wagon-box to spread.

Having thus described my invention what I claim, and desire to secure by Letters Patent is:—

The combination, with a pair of parallel cleats secured to one side of a wagon-box, one of said cleats having a looped box strap secured thereto, and a pair of parallel cleats secured to the opposite side of said wagon-box, one of said cleats being pivotally secured thereto and provided with a grooved face or recess, and a one piece detachable end-gate provided at opposite ends and upon either side with an L shaped strap the angular end of one of said straps engaging the looped box strap and the angular end of the other strap adapted to lie in and engage the inner grooved surface of the pivotally held cleat to prevent upward or outward movement of the end-gate.

In testimony whereof I affix my signature in presence of two witnesses.

WILLIAM H. PALMER.

Witnesses:

M. B. GROUT,

FREDK. J. LARSON.