July 11, 1950 F. O. TRUMP ET AL 2,515,144

DEVELOPING MEANS FOR A DRY TYPE DEVELOPING MACHINE

Filed Sept. 27, 1945 2 Sheets-Sheet 1

Fig. 1

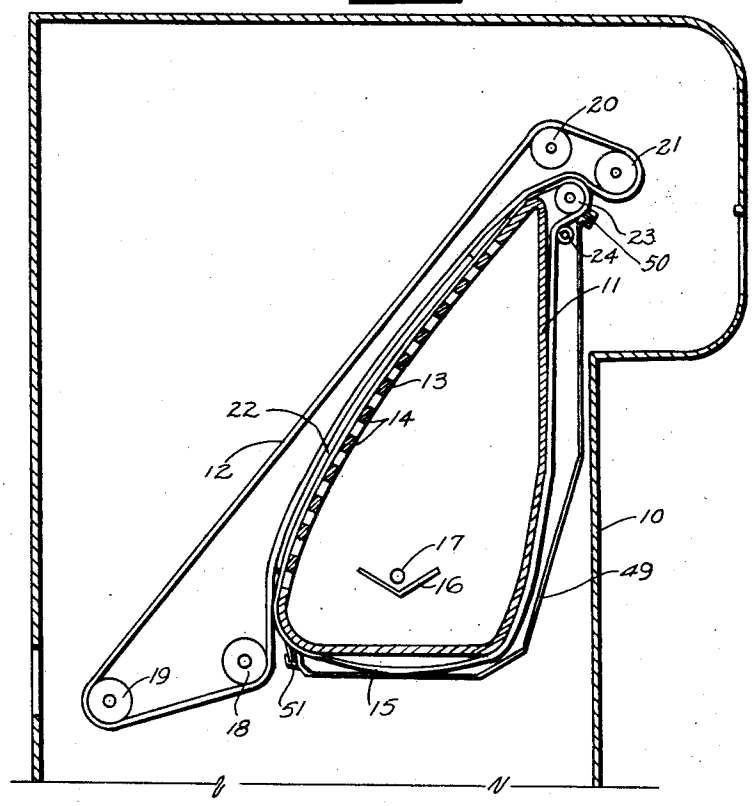


Fig. 2

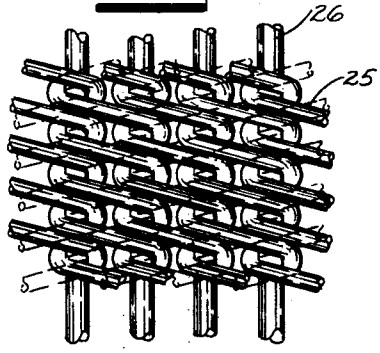


Fig 3

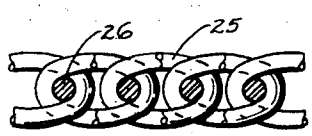


INVENTORS
FREDERICK O. TRUMP
STANLEY K. BISHOP
BY
Henry W. Coughlin
Rodney C. Southworth
ATTORNEYS

July 11, 1950 F. O. TRUMP ET AL 2,515,144

DEVELOPING MEANS FOR A DRY TYPE DEVELOPING MACHINE

Filed Sept. 27, 1945 2 Sheets-Sheet 2

Fig. 4

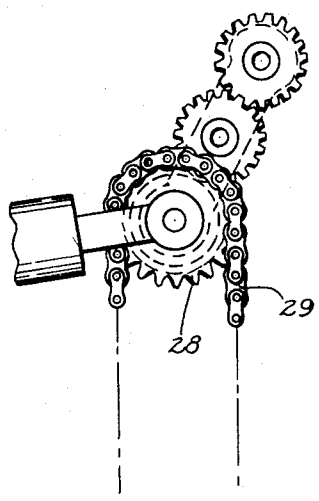


Fig. 5

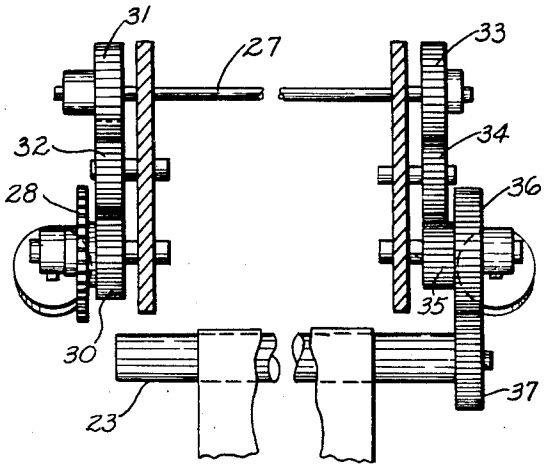


Fig. 6

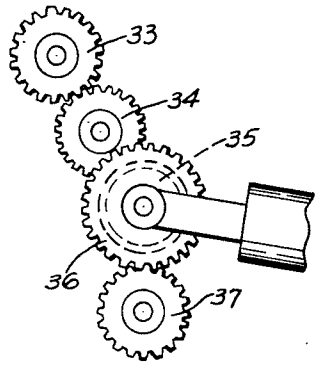


Fig. 7

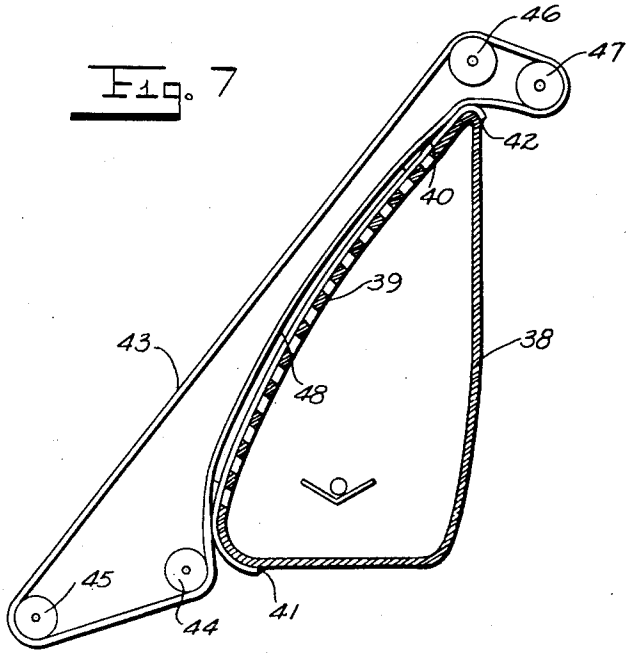


INVENTORS
FREDERICK O. TRUMP
STANLEY K. BISHOP
BY Henry W. Coughlin
Rodney C. Southworth
ATTORNEYS

Patented July 11, 1950

2,515,144

# UNITED STATES PATENT OFFICE

2,515,144

## DEVELOPING MEANS FOR A DRY TYPE DEVELOPING MACHINE

Frederick O. Trump and Stanley K. Bishop, Binghamton, N. Y., assignors to General Aniline & Film Corporation, New York, N. Y., a corporation of Delaware

Application September 27, 1945, Serial No. 618,834

4 Claims. (Cl. 95—94)

1

This invention pertains to dry developing machines, such as the well-known Ozalid type machines, and more especially to a part of such machines adapted to support the exposed material as it is developed and to facilitate action of the developer on that material.

The developing machines of a type to which the invention applies treat certain sensitized materials after exposure, with vapors, such as ammonia vapors, and include, among other things, a surface over which the sensitized material is moved while being subjected to the action of the vapors. Means is also provided for vaporizing the developer itself. Generally, the sensitized material is frictionally advanced and at the same time held in contact with the surface over which it is moved as it is subjected to the developing action.

It is one object of the invention to improve the action of the developing vapor on the exposed, sensitized material, especially to effect a more even distribution of the developer over the entire surface of the material during its passage through the developing zone or chamber. It is a further object of the invention to improve these machines so that the material being developed shall not be adversely affected by its contact with those parts of the machine by which or over which it may be moved during its development. A further object of the invention is that of making it possible to print and develop sensitized materials other than coated paper, and more especially to handle materials having an emulsion which is easily damaged by contact with elements over which its surface is moved. Another object of the invention is that of providing for greater diffusion of the developing vapors as they are applied to or as they contact the exposed surface of the material, and also to provide mechanism by which that material is advanced through the developing chamber or developing part of the machine without relative movement between the sensitized material and those surfaces with which it is in contact. Other objects will be apparent from the disclosure which follows.

According to the previously existing practice in machines of the type to which the invention applies, the exposed, sensitized material is conveyed through the machine by a system of flexible belts which pass over various guiding rollers and which are driven at a predetermined speed in synchronism with other parts of the machine, and at a speed dependent upon the time required to effect development of the material. The ammonia or other developer is subjected to heat and is converted to a vapor which generally reaches the surface of the exposed material through a plurality of openings in one side of a developing tank or chamber past which the sensitized material is progressed. A typical machine of this type and the perforated developing tank are to be seen in the U. S. Patents 2,200,996 and 2,350,257. The tank perforations are staggered, and in moving from one end of the perforated surface to the other, all of the area of the material to be developed is subjected to ammonia vapor. However, applicants have found that a better developing action may be obtained, especially for all speeds of travel for the material past the developing surface, and for different degrees of development, if means are provided which permit a greater diffusion and wider distribution of the developing vapor than is possible by the apertured tank surface. As a practical matter, the openings in the tank must be of appreciable size and to retain sufficient strength in the tank itself over which the sensitized material is to be moved, the openings must be reasonably spaced. The tank surface, while it may curve in one plane, must be flat in the other or opposite plane so that the material to be developed is always supported by contact with the tank over a total area about equal to the area of the openings through which the developing vapors pass. While the surface of the tank is finished to present a relatively smooth area over which the sensitized material slides, certain materials are frequently damaged by contact with the tank, and for that reason, are employed only with difficulty or not at all, despite the fact that it is desired to employ these more delicate materials in printing and developing machines of this type.

2

The present applicants have discovered that by use of an intermediate member of special characteristics overlying the perforated portion of the tank and upon which the sensitized material may move, or by which it may be moved, the above-mentioned desired results are obtained. As one example of such a developer diffusing and friction reducing member, a flexible, metallic link belt of a type hereinafter to be described has been used very successfully. These belts are fabricated from material resistant to the action of the ammonia vapors and the links thereof are so formed of relatively fine gauge wire that they contact the material to be developed at a greater number of relatively small areas. In other words, the contact is as nearly as possible what might be termed "point" contact and the actual total area of contact as compared to the unsupported area is rela-

tively small, thereby assuring more action of the developing vapors during a corresponding travel for the same period of time.

According to one form of the invention, such intermediate diffusing and supporting means is attached to the tank so that it extends over the developing surface thereof, but does not move, that is, the material to be developed is advanced over it and in such instances, the friction between the material and the surface of the intermediate member has been found to be much less than that which prevailed when such material was directly supported by the surface of the tank. In a second and generally preferable form of the invention, the intermediate diffusing and supporting means is a belt movable over the tank, preferably at substantially the same rate as the so-called "blanket" by which the exposed material is progressed and held in contact with the developing chamber. There is no relative movement between the sensitized surface of the material and those parts of the machine over which it is passed so that there can be no danger to the most delicate emulsions.

The invention will be described by reference to one specific form which the same may take and to a modification thereof. It is to be understood that this disclosure is illustrative only and that the invention may take any one of several different forms, depending upon the particular machine to which it is applied. Various materials may be employed and the details incidental to that machine herein illustrated will, of course, be varied, if the invention is used in machines having similar principles of operation, but different structural details.

In the figures of drawing:

Fig. 1 is a section through the machine to which the invention has been applied, several non-relevant parts having been left out, thereby to simplify the showing.

Fig. 2 is a detailed view of a small section of the intermediate material supporting and developer diffusing means.

Fig. 3 is a section taken lengthwise of the flexible link belt of Fig. 2.

Fig. 4 is a detailed view taken at the right hand side of the machine, showing certain driving elements therefor.

Fig. 5 is a front elevation of the driving mechanism for the movable flexible belt, other parts of the machine having been left out to avoid confusion.

Fig. 6 is a detailed view similar to Fig. 4, but taken at the opposite end of the machine.

Fig. 7 is a section similar to Fig. 1, but showing a modification.

Now referring to Fig. 1, part of a machine of the type is shown, including the upper part of the casing **10**, a developing tank **11** and a sealing sleeve **12** which is sometimes termed a "blanket." The tank **11** is of material not affected by the action of ammonia vapors and has an inclined, upwardly extending side **13** which has a plurality of staggered perforations **14**, only a few being illustrated here since the scale of the drawing will not permit clear showing of the actual number involved. The outer surface of the tank at the side **13** is highly polished and serves as a bearing for a flexible, link type belt **15**, the detailed construction of which is better illustrated in Figs. 2 and 3.

Within the tank **11** is provided a tray **16** in which there are one or more heaters **17** for evaporating ammonia which is fed to the tray in predetermined quantities dependent upon the size of the unit, the speed at which development is effected, and the material being treated.

The sealing sleeve **12** is preferably of fabric impregnated with a rubber composition which will resist action of the ammonia vapors and which will have that required flexibility and resilience to pass about a plurality of guide rollers **18, 19, 20, 21** and to conform to the surface of the tank over which sensitized material in continuous or sheet form is passed. Such a sheet of material **22** is shown in the figure, the actual thickness thereof being exaggerated for purposes of illustration. The sealing sleeve **12** engages the non-sensitized side of the material **22** and develops sufficient friction against that material to advance it through the developing zone and to discharge it from that zone to be engaged by other means (not shown) for delivering it from the machine. The roller **21** is positively driven and imparts the necessary movement to the belt **12**.

The link belt **15** passes about a positively driven roller **23** and then to the back of a second roller **24** which insures engagement of the roller **23** by the belt throughout about 180° or a sufficient angular extent to effect positive driving engagement. The roller **23** is a rubber covered roller and sufficient friction is developed between the rubber surface of the roller and the back of the link belt to assure that the said belt will be advanced at the proper rate of speed. The belt **15** passes rather loosely in back of and beneath the tank **11**, but presses against the surface of the side **13** of that tank. Preferably, the link belt and the tank are of stainless steel resistant to the ammonia vapors. These materials also form satisfactory cooperating bearing surfaces as they work together. The outer surface of the side **13** of the tank is highly polished to lessen the friction between the belt **15** and the tank.

While the invention is broadly directed toward a flexible means adapted to overlie the perforated side of the tank and of a type to engage the sensitized surface of the printing material at a relatively great number of points of contact with space between such points free to permit passage of the ammonia vapor to the surface of the material, one specific type of such means is illustrated in Figs. 2 and 3. A link belt, commercially available, has been found to serve satisfactorily. The said belt is flexible or articulated in one direction, although there is no objection to its being flexible in the other direction as well. Such a belt is comprised of a plurality of helically formed wire coils **25** suitably elongated in the direction of the length of the belt, the same being interengaged and connected by the hinge wires **26**. The actual size of these wire coils and the hinge members is exaggerated in these figures so as to show the construction clearly.

After the ammonia vapors pass through the holes **14** in the tank, they are then diffused and are permitted to reach all surfaces of the exposed material since the link construction of the belt **15** merely presents extremely fine physical obstructions to the passage of the vapors causing them to take a circuitous pathway about the coils and wires, but, in fact, permits those vapors to contact virtually the entire surface of the material from the time when it first arrives at the perforated part of the tank until it has left the uppermost portion thereof. While it might seem that development would not take place at those "points" or short "lines" of contact between the wire coils and sensitized material, the surprising

fact is that for all speeds of development, or for different degrees of development for any material, practically uniform action over the entire surface is obtained. Apparently, the actual contact areas are so small that the developer action, continuously applied over practically the whole surface, actually reaches the areas contacted by the supporting belt, giving results better than have been obtained with the staggered arrangement of perforations in the tank and without using the intermediate supporting and vapor diffusing means.

Preferably, the linear speed of travel for the link belt 15 and rubber impregnated sealing sleeve 12 should be substantially the same. Sensitized material held between them and passing through the developing zone would not have any relative movement between its sensitized surface and the outer surface of belt 15 so that there could be no undesired effect, such as minutely wrinkling or scratching the emulsion. In actual manufacturing of the parts, tolerances for the diameters of the driving rollers 21 and 23 must be allowed for, and in setting up those tolerances, provision is made for advancing the belt 15 at a rate so that it will never progress more slowly than the sealing sleeve 12. For that reason the roller 23 generally drives belt 15 slightly faster than the surface speed of the sleeve. That assures that no wrinkling of the sensitized material will be experienced, especially as it is delivered from the belts as they curve over roller 23.

Now referring to Figs. 4, 5, and 6, the roller 23 is driven through trains of gears and a shaft 27 which extends across the top of the machine. A sprocket 28 is first driven by a chain 29, only part of which is illustrated. This chain 29 extends down to another sprocket on the conveyor drive roller shaft which is in turn driven from a motor or some other source of power. The drive may be taken from any convenient part of the machine or from any convenient source of power so long as it is properly timed to function with other elements. At the left hand side of the machine, a gear 30 integral with or at least attached to the sprocket 28 drives the gear 31 through an intermediate idler 32. The gear 31 is fixed to one end of shaft 27 and then at the opposite or right hand side of the machine, a chain of gears 33, 34, 35, 36 and 37 functions to rotate the shaft 23.

In Fig. 7, a modification is shown in which the link belt or other supporting and vapor diffusing means is fixed to the tank, rather than being movable with the belt which advances the sensitized material. In this case, a tank 38 has a perforated side 39 overlying which is a length of belt material 40 similar to that illustrated in Figs. 2 and 3. The link belt may be connected to the tank by welding as at 41 and 42, or may be fixed thereto by clamps or in any other satisfactory manner. A composition sealing sleeve 43 runs about the rollers 44, 45, 46 and 47 and is driven in the same manner as the sleeve 12. An exposed sheet of sensitized material 48 is shown passing through the developing zone, and of course in this instance, the emulsion side of the material slides along the link belt material 40. Of course, for sensitized material which may be easily damaged by frictional movement of even the finest surfaces, the movable construction of Fig. 1 is much to be preferred. However, the modification of Fig. 7 gives better results with all materials than are obtainable with the perforated tank only. With sensitized materials which are not easily damaged, the construction of Fig. 7 is entirely adequate.



While it is not entirely necessary in all instances, a sealing means may be provided at the side of the tank opposite the perforated or developing area. In Fig. 1, such a means takes the form of a plate or sheet 49 and clamps or holders 50 and 51 within which are held rubber or other flexible sealing strips. The plate 49 extends from side to side of the machine casing 10 and with that part of the casing, forms a seal against escaping ammonia vapors. The rubber strips press resiliently against the chain belt as it passes over roller 23 and as it turns the lower corner of the tank. Preferably, the sealing strips function on the chain belt as close to the exit and entrance points it makes in the developing area of the tank. Any escaping vapors or vapors passing along with the chain are confined to the enclosed space between the tank and plate 49.

While stainless steel is one of the materials preferred for the flexible link belt, other materials may be used, and the actual details of construction for the belt need not be exactly those of Figs. 2 and 3. Other metals resistant to the action of ammonia vapors and having suitable anti-friction and wear resistant characteristics may be employed. Certain plastic screens may be used, although those now available are not as durable as metal.

The term "diffusing" has been employed, and by that term, applicants refer to the fact that the ammonia vapors which initially pass through the relatively large apertures 14 are thereafter directed into many more different paths in and about the wire coils of the belt or screen and find their way to the entire surface of the sensitized material which is supported only at the outermost surfaces of the coils or links of the belt. The terms "point" contact or "line" contact are not to be construed literally, but refer to the extremely small surfaces of contact between the belt and supported material to be developed, as compared to the relatively great amount of unsupported surface.

The description makes reference to development by ammonia vapors, but of course, it is to be undertsood that other dry developing techniques may be employed, or the mechanism herein described and claimed may be a part of machines for such other techniques. The term "dry development" is a relative one and in the event a machine not strictly classifiable as a "dry developing machine" is adapted to funtcion in a similar manner, applicants intend to cover the use of their novel mechanism in any and all machines to which it is applicable and for which it may be advantageously employed.

While one embodiment and a modification of the invention have been disclosed, it is to be understood that the inventive concept may be carried out in a number of ways. This application is, therefore, not to be limited to the precise details described, but is intended to cover all variations and modifications thereof falling within the spirit of the invention and the scope of the claims.

We claim:

1. In a dry developing machine, the combination of a tank and developer vaporizing means therefor, said tank having a perforated portion through which developing vapors pass, a flexible vapor confining and material advancing sleeve overlying the perforated portion of the tank and movable relatively to the surface thereof, a vapor diffusing means overlying and in contact with the

said perforated portion of the tank to be supported thereby, said means serving to support a sensitized sheet between its surface and an adjacent surface of the said sleeve, said vapor diffusing means comprising a flexible, chain-like, metallic belt of fine wire links which combine to support the sensitized sheet and maintain it out of contact with the underlying perforated tank surface and each link of which contacts the sheet at a relatively small area as compared to the intermediate unsupported area between adjacent links and means including at least one driven roller over which said belt is passed and by means of which it is frictionally advanced for positively moving the said diffusing and supporting means at substantially the same speed as the speed at which the sleeve is advanced thereby to convey sensitized material past the developing vapors with substantially no relative movement between the said material and the contacting surface of the sleeve and diffusing and supporting means.

2. Mechanism as defined in claim 1 wherein there is additionally provided at the part of the tank beyond the said perforated portion, a vapor confining closure between which and the surface of the said tank the metallic belt is passed as it travels between that point at which it is withdrawn from contact with the sensitized material and a second point at which it may again contact sensitized material and pass over the perforated tank portion.

3. In a developing machine for sensitized material by means of developing vapors, a closed tank in which said vapors are generated, said tank having a wall defining a plurality of perforations for the escape of said vapors, said wall forming a surface over which sensitized material is exposed to said vapors, means for moving said material comprising a sealing sleeve in the form of an endless belt of impervious material for said vapors in contact therewith, an endless belt intermediate between said exposing surface and said material comprising a wire mesh of substantially greater perviousness than said wall due to said perforations to the developing vapors whereby said vapors are diffused, means for moving said last-mentioned belt at substantially the same speed as said sealing sleeve whereby said material between said belts is held substantially without relative movement with respect to any of said belts during its progress over said tank and without frictional contact between said material and said tank.



4. In a developing machine for sensitized material by means of developing vapors, a closed tank in which said vapors are generated, said tank having a wall defining a plurality of perforations for the escape of said vapors, said wall forming a surface over which sensitized material is exposed to said vapors, means for moving said material comprising a sealing sleeve in the form of an endless belt of impervious material for said vapors in contact therewith, an endless belt intermediate between said exposing surface and said material comprising a wire mesh composed of closely spaced links having a smooth surface in the direction of travel, said links being held by wire rods extending laterally to the direction of travel pivotably supporting said links and having a greater perviousness than said wall due to said perforations to the developing vapors whereby said vapors are diffused, means for moving said last-mentioned belt at substantially the same speed as said sealing sleeve whereby said material between said belts is held substantially without relative movement with respect to any of said belts during its progress over said tank and without frictional contact between said material and said tank.

FREDERICK O. TRUMP.
STANLEY K. BISHOP.


REFERENCES CITED

The following references are of record in the file of this patent:

UNITED STATES PATENTS

| Number | Name | Date |
|---|---|---|
| 33,019 | Baggott | Oct. 13, 1868 |
| 1,669,066 | Murch | May 8, 1928 |
| 1,704,439 | Langsner | Mar. 5, 1929 |
| 1,841,466 | Brown | Jan. 19, 1932 |
| 2,240,409 | Morse | Apr. 29, 1941 |
| 2,257,207 | Von Meister et al. | Sept. 30, 1941 |
| 2,299,045 | Trump | Oct. 13, 1942 |

FOREIGN PATENTS

| Number | Country | Date |
|---|---|---|
| 441,888 | Germany | Mar. 15, 1927 |
| 443,263 | Germany | Apr. 25, 1927 |
| 650,123 | France | Sept. 17, 1928 |