F. B. COOK.

PROCESS OF MAKING CONNECTING PLUGS.

APPLICATION FILED JAN. 15, 1915.

1,161,194. Patented Nov. 23, 1915.

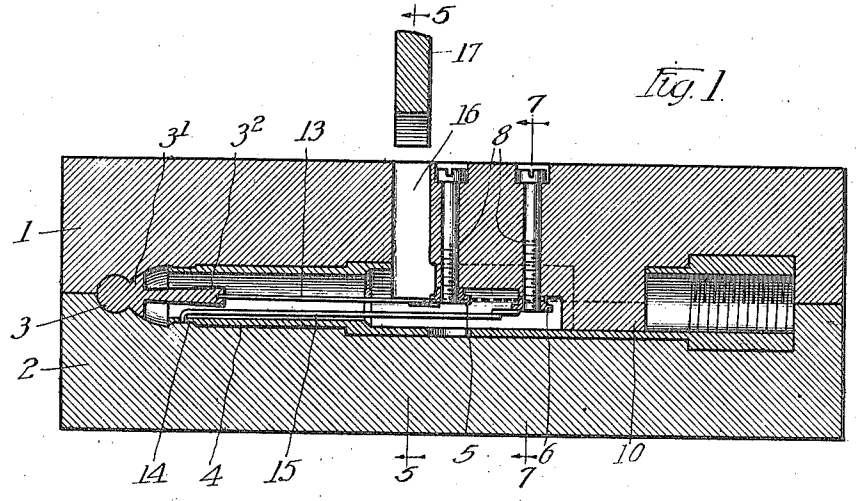

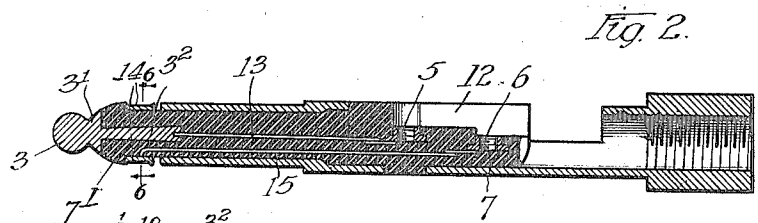

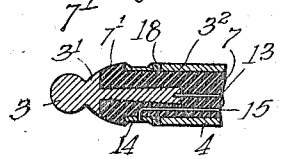

Fig. 3.

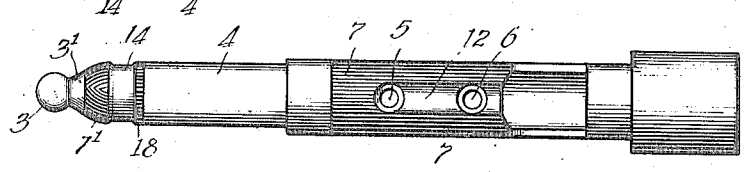

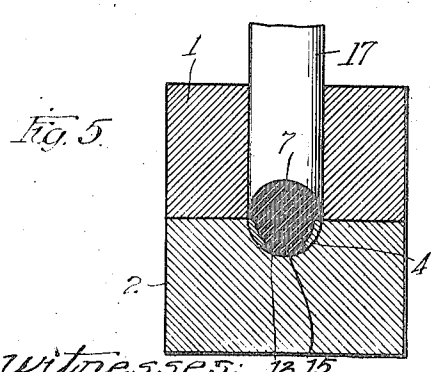

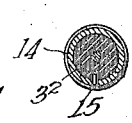

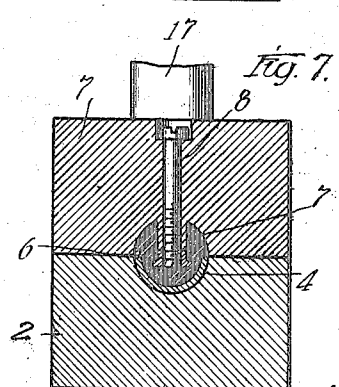

Witnesses:
Arthur W. Carlson
Robert H. Wain

Inventor
Frank B. Cook
By G. L. Cragg
Atty.

UNITED STATES PATENT OFFICE.

FRANK B. COOK, OF CHICAGO, ILLINOIS, ASSIGNOR TO FRANK B. COOK COMPANY, OF CHICAGO, ILLINOIS, A CORPORATION OF ILLINOIS.

PROCESS OF MAKING CONNECTING-PLUGS.

1,161,194. Specification of Letters Patent. Patented Nov. 23, 1915.

Application filed January 15, 1915. Serial No. 2,424.

To all whom it may concern:

Be it known that I, FRANK B. COOK, citizen of the United States, residing at Chicago, in the county of Cook and State of Illinois, have invented a certain new and useful Improvement in Processes of Making Connecting-Plugs, of which the following is a full, clear, concise, and exact description, reference being had to the accompanying drawings, forming a part of this specification.

My invention relates to the manufacture of conducting plugs, such as are employed in telephony, and has for its object the provision of a process whereby molding material may be forced within the bores of plug contact portions to hold these contact portions in suitable assembly with complemental contact portions, the process of my invention avoiding much machine work and thereby producing a cheaper plug and one which is more substantial than have hitherto been employed.

I will explain my invention more fully by reference to the accompanying drawing showing the preferred method of practising the same and in which—

Figure 1 is a vertical sectional view illustrating the plug after its reception within a mold structure and before the molding material is placed in position; Fig. 2 shows the plug in longitudinal section after the completion of the molding operation; Fig. 3 shows the final step which is desirably taken in the formation of the plug; Fig. 4 is a plan view of the completed plug; Fig. 5 is a sectional view on line 5—5 of Fig. 1; Fig. 6 is a sectional view on line 6—6 of Fig. 2; and Fig. 7 is a view on line 7—7 of Fig. 1.

Like parts are indicated by similar characters of reference throughout the different figures.

The mold structure desirably includes upper and lower members 1 and 2 which part at a plane which includes the axis of the metallic plug portions 3 and 4 when received within cavities formed in complemental recesses in the members 1 and 2 and which cavities together conform, generally, to the completed plug. The plug is to have interiorly threaded incoming conductor terminal sleeves or bushings 5 and 6 which are to be embedded in the molding insulating material 7. These sleeves are therefore separably carried by the upper mold member 1 which is preferably provided with screws 8 for the purpose of holding the bushings 5 and 6 upon their lower ends in the position these bushings are to occupy in the completed plug. The screws 8 desirably have free sliding fit in the vertical holes provided therefor in the molding element 1, the sleeves or bushings 5 and 6 being screwed upon the lower ends of the screws 8 by turning these screws until the heads thereof are bottomed whereby the sleeves or bushings 5 and 6 coöperate with the screws to seal the openings in the molding member 1 in which the screws 8 are received there to prevent the upward flow of molding material in the molding operation. The molding member 1 has a rear portion 10 which terminates in a semicylinder to fill a portion of the tube 4 (whose upper half is substantially removed at its intermediate portion) that is just to the rear of the rear terminal 6 whereby molding material is prevented from being forced into the rear part of the tube 4 which may be threaded for the connection of a third plug conductor in accordance with well known practice. The portion of the molding member 1 through which the screws 8 pass is also downwardly projected, but terminates short of the axis of the plug whereby a suitable groove 12 is formed in the mold insulation 7 for the reception of the conductors which are to lead through the rear end of the tube 4 into connection with the terminals 5 and 6. The means by which such conductors are attached to these terminals is well understood and will therefore not be described.

As illustrated in Fig. 2, and as provided by the formation of the part 11 of the molding member 1, the insulation 7 is at a lower level where the terminal 6 is supported than where the terminal 5 is supported in order that the conductors leading to these terminals may also be in different levels. The tip portion 3 of the plug is desirably connected with the terminal 5 by means of a separately formed conductor 13 while the tubular or ring portion 14 of the plug which is to constitute the forward contact ring is connected with the terminal 6 by another separately formed conductor 15, though the invention is not to be limited to the employment of conductors 13 and 15 which are separately formed from the parts 3 and 14.

When the conductors are separately formed they are secured to their respective parts by soldering or brazing. In order to prevent the conductors 13 and 15 from contacting with each other and with other metallic portions of the structure, due to the force of the inflowing molding material, they are desirably covered with insulation, such as enamel. After the metallic portions 3, 4, 5, 6, 13, 14 and 15 have been assembled within the mold structure as shown in Fig. 1 a quantity of molding material, which has been calculated to be sufficient to form the insulating portion of the plug, is placed within the vertical channel 16 whereafter the plunger 17 is depressed to force the required flow of the molding material, the lower end of the plunger having a semi-cylindrical recess which conforms to the external surface of the plug structure at its intermediate portion. After the plunger has been fully depressed it is withdrawn whereafter the screws 8 are turned to disengage them from the terminals 5 and 6 which now remain in the insulation 7, the retention of these terminals in the insulation being insured by providing the terminals with outsetting flanges at their lower ends. After the screws 8 are loosened the molding member 1 is removed whereafter the plug, which is now almost completed, is withdrawn from the lower member 2. After the withdrawal of the plug an annular cut is made clear through the tube 4 at the forward end of the plug electrically to separate the ring portion 14 of the tube 4 from the balance of the tube, as illustrated in Fig. 3. After this groove has been formed it may be filled with a ring of insulation 18, whereupon the plug is complete except for the attachment of the flexible connectors that are to enter the same. The molding elements 1 and 2 must be very nicely made in order to snugly fit the metallic parts of the plug and to grip the same to hold them in the position that they are to occupy after the molding operation. The engagement of the molding members 1 and 2 with the top portion 3 of the plug is such that the base 3^1 of this tip and the tail end 3^2 thereof are held exactly in their proper positions to afford the proper spacing between the tip and the front end of the ring 14 and between the tail 3^2 and the ring 14 and the balance of the tube 4 whereby the molding material is not only properly distributed at the central or rear portion of the plug but also properly finds passage at the front portion of the plug where it has an exposed formation 7^1 over which jack contact springs may ride.

The plug structure herein shown is claimed in my co-pending application Serial No. 2,422, filed January 15, 1915.

In forming connecting plugs in accordance with my present invention I desirably also employ the method broadly claimed in my prior application Serial No. 846,027, filed June 19, 1914.

While I have herein shown and particularly described one form of apparatus with which the method of my invention may be practised it is understood that I do not limit myself to such apparatus.

Having thus described my invention I claim as new and desire to secure by Letters Patent the following:—

1. The process of forming connecting plugs which consists in holding a metallic tubular element in position for a molding operation; forcing molding material within the bore of such element; and thereafter subdividing the said element into distinct contact portions that are held together and insulated from each other by the molded material.

2. The process of forming connecting plugs having a plurality of contact portions, of which one is tubular, and which contacts are to be insulated from each other, which consists in holding said contact portions in separated relation; passing an insulated conductor through the tubular contact portion and which conductor is conductively continuous with the other contact portion; and effecting the flow of molding insulating material into the spacing between said contact portions and receiving said conductor to hold the contact portions in relation.

3. The process of forming connecting plugs having a plurality of contact portions, of which one is a tubular contact and another a tip contact, and which contacts are to be insulated from each other, which consists in holding said contacts in alinement and in separated relation; passing an insulated conductor through the tubular contact and which conductor is conductively continuous with the other contact; and effecting the flow of molding insulating material into the spacing between said contacts and receiving said conductor to hold the contacts in relation.

4. The process of forming connecting plugs having a plurality of contact portions, of which one is a tubular contact and another a tip contact, and which contacts are to be insulated from each other, which consists in holding said contacts in alinement and in separated relation across the bore of the tubular contact and with spacing between the forward end of the tubular contact and the tip contact; passing an insulated conductor through the tubular contact and which conductor is conductively continuous with the other contact; and effecting the flow of molding insulating material into the spacing between said contacts and receiving said conductor to hold the contacts in relation and to afford an exposed portion of the insulation between the contacts at the forward end of the tubular contact.

5. The process of forming connecting plugs which consists in relatively positioning contacts, one of which is tubular; positioning an incoming conductor terminal in the spacing that is to receive insulation; and effecting the flow of molding insulating material into the spacing between the contacts and that receives said terminal to hold the contacts and terminal in relation.

6. The process of mounting alined tubular elements separately upon a mounting which consists in employing a tube out of which these elements are to be formed; molding a mounting for these elements within the tube; and thereafter removing the portion of the tube which connects the elements that are to be made from it.

7. The process of mounting alined tubular elements separately upon a mounting which consists in employing a tube out of which these elements are to be formed and in which tube said elements are initially integrally included; molding a mounting for these elements within the tube; and thereafter removing the portion of the tube which connects the elements that are to be made from it.

In witness whereof, I hereunto subscribe my name this ninth day of January, A. D. 1915.

FRANK B. COOK.

Witnesses:
G. L. CRAGG,
ETTA L. WHITE.