June 24, 1930. H. MILLER 1,766,717

AUTOMATIC DISPENSING APPARATUS

Filed Sept. 9, 1929 3 Sheets-Sheet 1

Fig. 1.

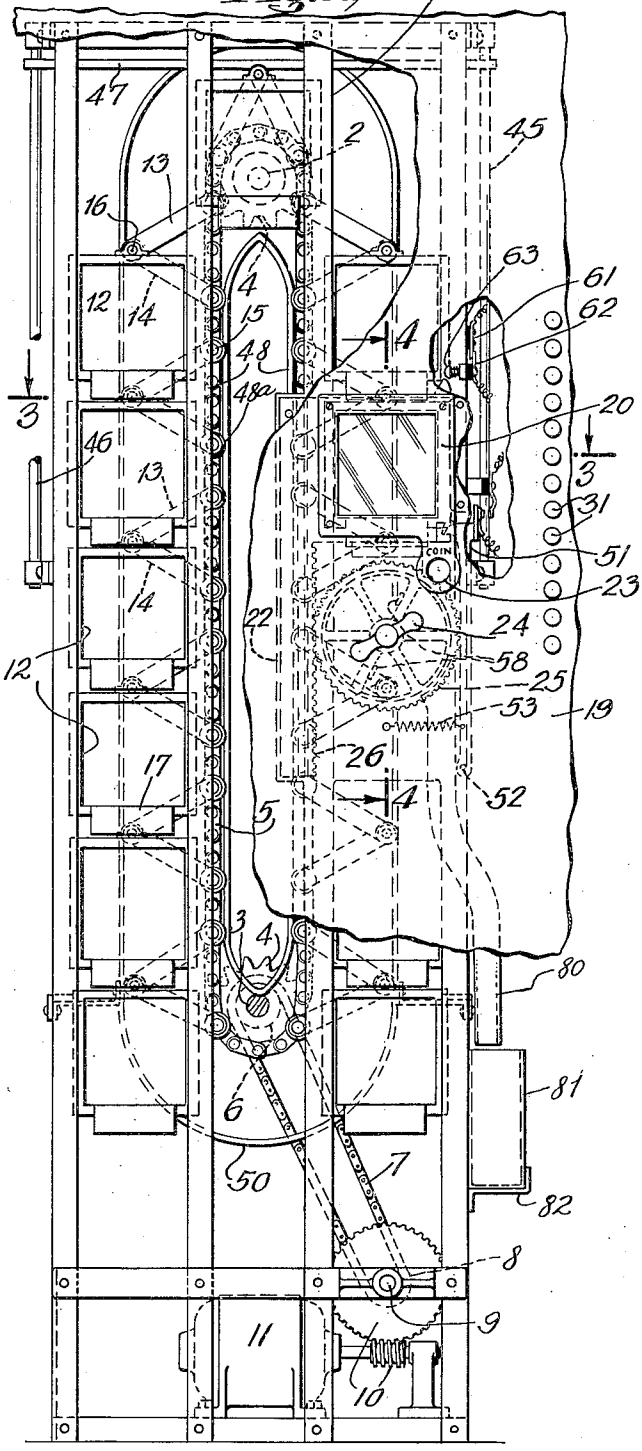

Fig. 2.

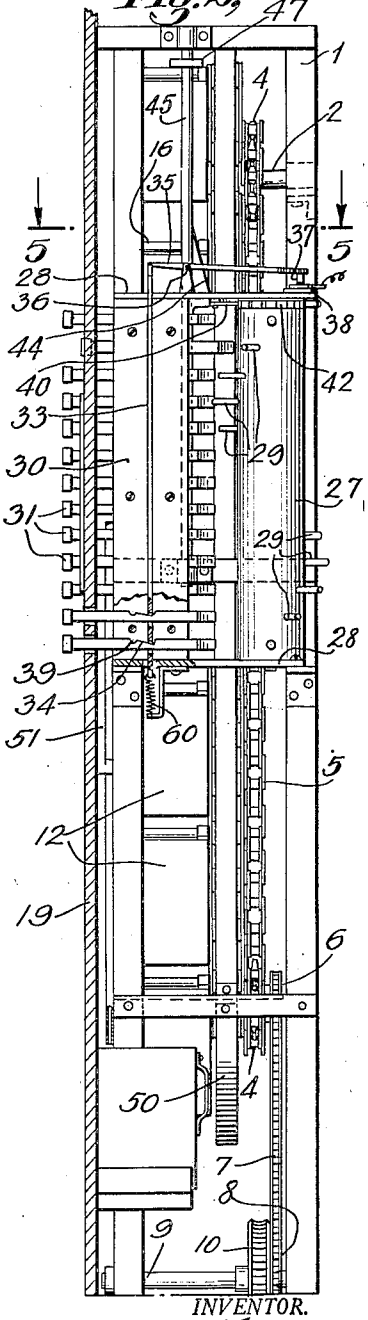

INVENTOR.
HARRY MILLER

BY Rogers & Rines

ATTORNEYS.

June 24, 1930. H. MILLER 1,766,717

AUTOMATIC DISPENSING APPARATUS

Filed Sept. 9, 1929 3 Sheets-Sheet 2

Fig. 3,

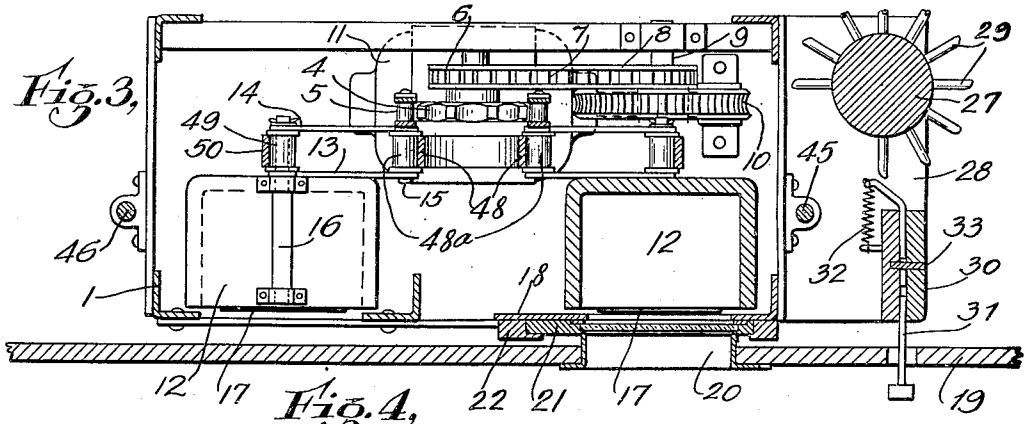

Fig. 4,

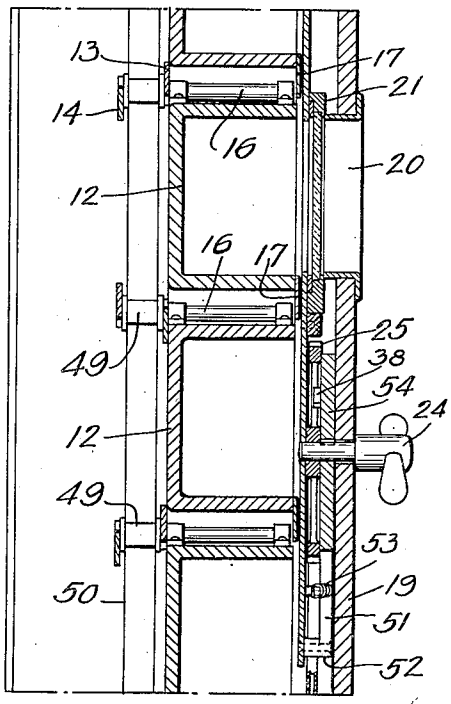

Fig. 5,

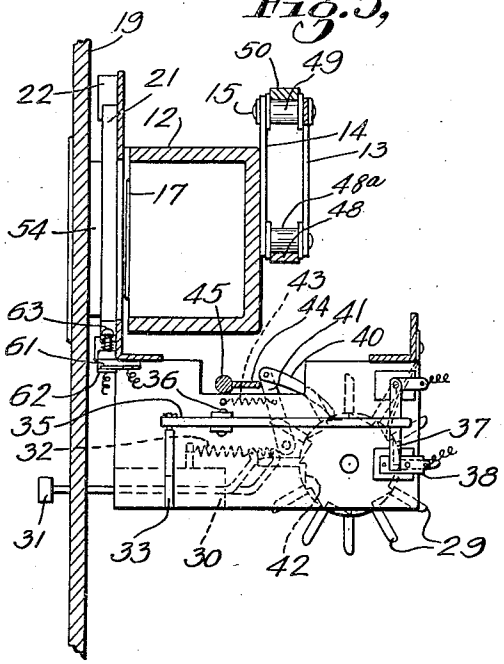

Fig. 6.

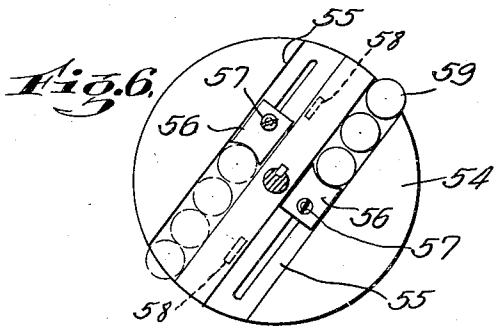

INVENTOR.
HARRY MILLER
BY Meyers & Jones
ATTORNEYS.

June 24, 1930. H. MILLER 1,766,717

AUTOMATIC DISPENSING APPARATUS

Filed Sept. 9, 1929 3 Sheets-Sheet 3

Fig. 7.

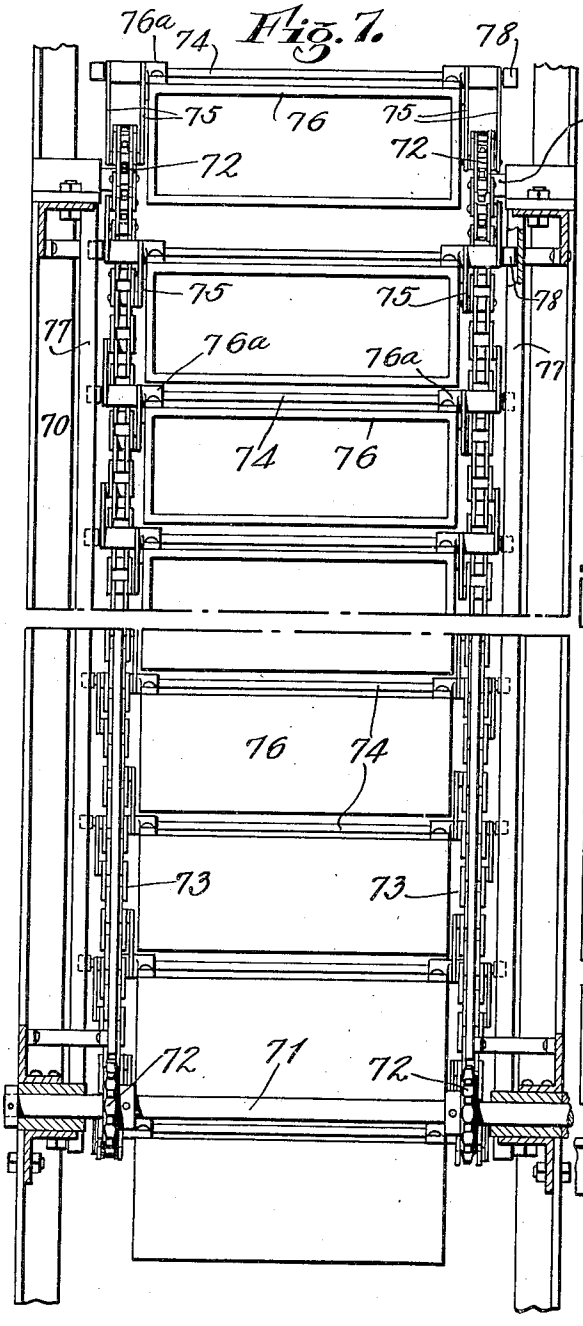

Fig. 8.

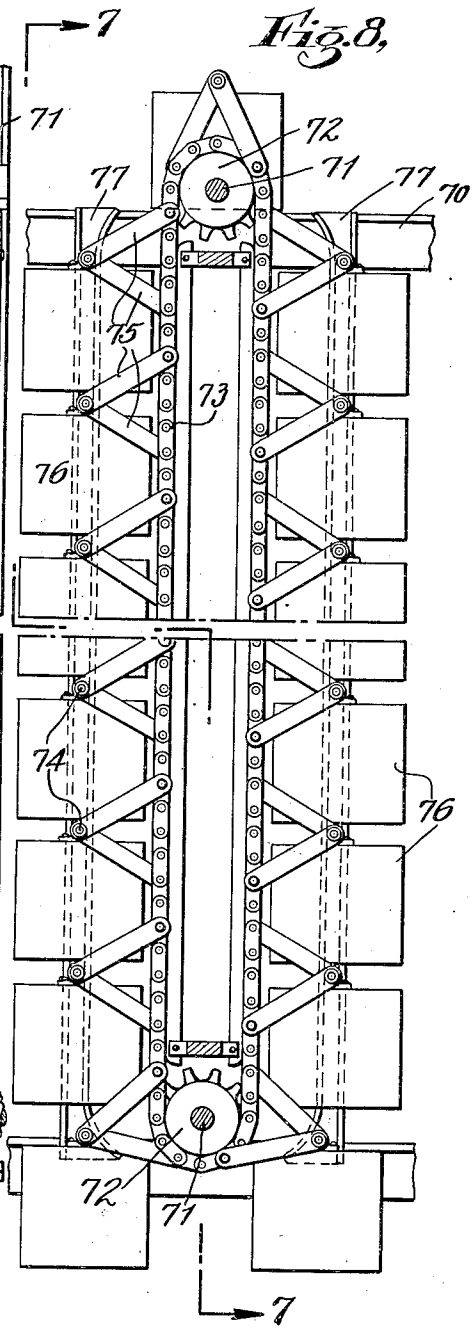

INVENTOR.
HARRY MILLER
BY Meyers & Jones.
ATTORNEYS.

Patented June 24, 1930 1,766,717

UNITED STATES PATENT OFFICE

HARRY MILLER, OF NEW YORK, N. Y.

AUTOMATIC DISPENSING APPARATUS

Application filed September 9, 1929. Serial No. 391,218.

This invention is an improvement in automatic dispensing apparatus, and more particularly in apparatus of the coin controlled type.

One of the primary objects of the present invention is the provision of apparatus, in the form of an endless carrier, having a plurality of receptacles, each containing merchandise, in a normally closed cabinet, so arranged that the prospective purchaser may inspect the same in order to enable a choice of goods.

Another object is the provision in such apparatus of mechanism by means of which, after selection has been made, the container of the selected article, may be brought into position at an aperture in the cabinet, having a door capable of being operated to open position by the purchaser after certain conditions have been complied with.

Another object is the provision of a closure for the aperture, normally closed and locked, but capable of release by the insertion of one or more coins of a selected denomination.

Another object is the provision of cooperating mechanism in connection with the door and a manually movable member to be moved by the purchaser, normally disconnected, and capable of being connected by the insertion of one or more coins of a selected denomination in a suitable receiver.

Another object is the provision of coin controlled mechanism capable of adjustment for enabling the lock release to be operated by one or any selected number of coins of a certain denomination.

Another object is the provision of a carrier, having receptacles for the articles, motor operated to move the receptacles in succession past a selected point, wherein the motor is normally inoperative, and capable of being put into operation for a definite length of time by the purchaser's indication of choice, whereby to cause the carrier to move far enough to bring the receptacle of the selected article to a position such that the article is accessible when certain conditions are complied with.

Another object is the provision in such apparatus, of a plurality of manually movable indicators, corresponding in number to the number of receptacles, and mechanism operated by the movement of any selected indicator for causing the carrier to move a distance sufficient to bring the receptacle of the article corresponding to the indicator, to a position such that the article is accessible when certain conditions are complied with by the purchaser.

Another object is the provision in an endless carrier operating over a fixed path, including straight and curved portions, and carrying a number of receptacles for merchandise, of a mounting for the receptacles, of a character such that a maximum number thereof may be carried by the carrier without interference one with another on the curved parts of the fixed path.

With these and other objects in view the invention consists in the construction and novel combination of parts fully described hereinafter, illustrated in the accompanying drawings, and pointed out in the claims appended hereto, it being understood that various changes in the form, proportion, size and minor details of construction within the scope of the claims, may be resorted to without departing from the spirit of the invention.

In the drawings forming a part hereof:—

Fig. 1 is a front view of one unit of the improved apparatus, with the front panel partly removed.

Fig. 2 is a side elevation looking at the right of Fig. 1.

Figs. 3 and 4 are sections on the lines 3—3 and 4—4 respectively, of Fig. 1.

Fig. 5 is a section on the line 5—5 of Fig. 2.

Fig. 6 is a detail in side elevation of a part of the coin control mechanism.

Fig. 7 is a front elevation of another embodiment of the invention with parts in section, the section part being substantially on the line 7—7 of Fig. 8.

Fig. 8 is an end view of Fig. 7.

In the construction shown in Figs. 1 to 6, a suitable cabinet including a frame 1 is provided and shafts 2 and 3 are journaled at the top and near the bottom of the frame respectively. Each shaft carries a sprocket

wheel 4, and a sprocket chain 5 is supported by the wheels. The lower shaft 3 has another sprocket wheel 6, which is connected by a chain 7, with a wheel 8 on a shaft 9, driven through a worm gear connection 10 from a suitable motor 11, in the present instance, an electric motor, arranged in the bottom of the cabinet, of which the frame is a part.

One of the primary objects of the invention is to provide a mounting for the boxes 12, such that a maximum number of boxes may be carried by the chain, and such that when the boxes are traveling on the long reaches of the chain, they will be in close relation, in fact approximately abutting relation, while when they travel about the wheels, they will be spaced far enough apart, so that no box will interfere with adjacent boxes.

With this object in view, each box 12 is supported by a plurality of pairs of straps 13 and 14. The members of each pair of straps are connected at one end to links of the chain, by means of pivot bolts 15, which connect sundry of the links of the chain. The links 13 incline downward from their connection, while the links 14 incline upward, that is, the pairs converge toward each other at their outer ends, and the said ends are pivoted on a shaft 16, which supports a box 12. The shafts 16 are journaled in bearings on the boxes, and the arrangement is such that each box is at the outer side of the chain, the links and the boxes being so proportioned, that the inner sides of the boxes are about flush with the chain.

The arrangement is such that on the up and down reaches of the chain, it being understood that the boxes are positioned in front of the plane of the chain, the boxes arranged close together, so that a maximum number of boxes may be connected with the chain. As the boxes pass around the sprocket wheels 4, they are swung further apart, due to the manner of connecting them with the chain, so that there is no interference of the boxes during the passage about the wheels, and a maximum number of boxes may be arranged within the cabinet, of which the frame is a part.

The front ends of the boxes are open, as shown, each being designed to contain an article or articles, and at the lower edge of the front of each box, a label 17 depends. This label may bear a number or a name, for identifying the box, for a purpose to be described. The front of the cabinet, of which the frame is a part, and the casing of which is indicated at 19, is formed with a glass window, so that the open ends of the boxes and the contents thereof are visible at one side of the frame. The other side may be closed by the panel 19, which has an opening 20, with which the boxes are adapted to register in succession, and a door 21 cooperates with the opening, the said door being slidably mounted in guides 22 in the frame. The door moves vertically, and is locked in a manner to be presently described.

The unlocking thereof is coin controlled. When a coin or series of coins of suitable denomination is inserted in the coin opening 23 in the panel 19, the locking mechanism may be released by turning a handle 24 journaled in the panel 19. This handle, which is in the form of a shaft, carries loose thereon, a spur gear 25, in mesh with a rack bar 26, slidable vertically in the panel 19, and connected at its upper end with the door.

Selective mechanism is provided for enabling any desired box to be brought into register with the door. This mechanism includes a roller 27 journaled vertically in brackets 28, extending laterally from the cabinet. The roller has pins 29 extending radially from it in spaced relation, the pins being arranged spirally of the roller. In front of the roller and carried by the brackets is arranged a support 30, in which are slidably mounted a number of push buttons 31, the buttons corresponding in number to the number of boxes on the chain, and each button is preferably labeled to indicate to which box it pertains. The buttons are normally pressed outward by springs 32, arranged between the inner ends thereof and the support 30, and when pushed inward, they are extended into the path of movement of the pins 29.

All of the pins pass through a cam plate 33 mounted to move vertically in the support 30, the cam plate having an opening for each push button. Each of the buttons has a cam surface 34, for engaging the cam plate, to move the plate up when the pin is pushed inward. The upper end of the plate is pivoted to one end of a lever 35, pivoted intermediate its ends 36 on one of the supports 28, and the other end of the lever is above the movable member of a switch 37. The fixed member 38 of the switch is mounted on the support 28.

It will be apparent from the description that when any push button is pushed inward, it will operate the lever 35, to close the switch 37—38, which supplies current to the motor 11, suitable current connections being provided for this purpose. When a push button is pushed inward, as shown in Fig. 2, the chain at once commences to move, and it will continue moving, until the pin on the roller 27 in register with the push button, engages the button, and returns it to normal position, thus breaking the circuit. Each push button is notched, as shown at 39, adjacent the cam surface 34, and the engagement of this notch with the upper end of the opening of the cam plate, releasably locks the push button in the position shown for button 2 in Fig. 2.

When the pin 29 corresponding to button 2, engages said button, it is pushed outward,

opening the switch. The roller 27 is moved intermittently by means of a pawl 40, pivoted to a carrier 41 at one end, and engaging a ratchet wheel 42 at the other, the ratchet wheel being rigid with the roller. The pawl carrier is normally held in the withdrawn position of Fig. 5, by means of a spring 43, and it is operated in the opposite direction by a cam 44 on a rod 45 having guided vertical movement on the adjacent side wall of the cabinet.

Referring to Fig. 3, it will be seen that a second shaft 46 is mounted on the opposite side of the cabinet, and referring to Fig. 2, it will be noted that the shafts are connected by a cross plate 47, Figs. 1 and 2. The cross plate and the rods 45 and 46, are lifted by each box 12 to the position of Fig. 1, as the said box passes over the shaft 2, and the parts return to normal lowered position by their own weight. Thus the plate 47 forms a stabilizer for the boxes as they pass around the shaft 2, so that the boxes do not swing or oscillate, but move squarely about the shaft.

The pins 29 are so arranged with respect to the boxes 12, that when any push button is depressed, the chain will travel far enough, so that the box corresponding to the push button will be at the door 21, when the pin 29 engages the push button and returns it to normal position. Each of the pivot pins 16 carries a roller 48ª in front of the plane of the chain, and these rollers move in contact with the outer sides of a guide 48. Each of the shafts 16 supporting a box also carries a roller 49 behind the box, and between the links 13 and 14, and the said rollers 49 move in contact with a guide 50.

Referring to Fig. 1, it will be seen that the guide 50 is a closed loop, shaped into elliptical form, the contour of the loop corresponding to the path traveled by the rollers 49. The guide 48 is a closed loop, the contour thereof corresponding to the path of travel of the rollers 47. Thus the boxes are supported throughout their travel between the guides 48 and 50, and at the top they are prevented from jiggling or oscillating, by the plate 47.

The lock for the door includes a latch 51, pivoted at 52 to the cabinet, and normally held in locking position by the spring 53, it being understood that the wheel, the latch and the spring, are behind the panel 19. A disk 54 is secured to the shaft or handle 24, and the inner face of the disk has a groove 55, which is parallel with the diameter of the disk. In the groove is arranged a stop 56, which is adjustably held in the disk by a screw 57. The disk also has lugs 58 on its inner face, which are adapted to engage spokes of the spur gear 25, to drive the gear when the handle is turned under certain conditions to be described. By means of the stop 56, the depth of the groove 55 may be varied, so that it will receive 1, 2, 3 or 4 coins, but with the outermost coin, indicated at 59, extending beyond the perimeter of the disk, far enough to engage the latch 51, and release it from the door.

When the coin chute has received the one, two or more coins, for which it is designed, and turns to open the latch, the lugs 58 engage the spur gear, and rotate the same to open the door. The plate 33 is normally pressed downward by a spring 60, arranged between the lower end thereof and a stop on the lower support 28.

A contact switch 61—62 is mounted on the cabinet, just above the door, when it is in lowered position, the said switch being interposed in the motor circuit. The movable member 62 of the switch has a button 63 which is engaged by the door edge, when the door is moved upward, thus opening the switch 61—62, and the motor circuit, so that the motor cannot be started when the door is open.

In the embodiment of the invention shown in Figs. 7 and 8, the construction and operation is in principle the same as in the embodiment shown in Figs. 1 to 6, this construction, however, being designed for use with containers for articles of larger size. Referring to the drawings, it will be seen that a frame 70 is provided, in which is journaled shafts 71, arranged at the top and bottom of the frame. Each shaft carries two sprockets 72, which are arranged near the ends of the shafts, the corresponding sprockets of the two shafts being in register.

Sprocket chains 73 are supported by the sprocket wheels, and a plurality of shafts 74 is carried by the chain. The shafts are connected to the chains by links 75, and referring to Fig. 8, it will be seen that the links 75 are arranged in the same manner as the links 13 of Fig. 1. Two pairs of links connect each shaft to the chains, a pair of links being provided for each chain.

The member of each pair of links have a common pivotal connection with the adjacent end of the shaft, and an individual connection with the adjacent chain, the links diverging from each other toward the chain. The containers indicated at 76 are supported by the shafts. Each container is open at the front, as shown in Fig. 7, and bearings 76ª are provided on the top of the container for engagement by the shaft.

Guides 77 are provided on the frame, for engagement by rollers 78 on the extended ends of the shafts. These rollers move in the guides, on the long reaches of the chain. That is, each guide extends from near the level of the shaft 71 at the top, to below the level of the shaft 71 at the bottom of the frame. The shafts are driven, and the mechanism for controlling the movement of the chain, and the coin controlled mechanism is the same as in the construction of Fig. 1.

The arrangement shown in Figs. 7 and 8, is as previously stated, of larger size, each container being adapted to contain a larger number of articles, or larger articles.

Referring to Figs. 1 and 2, it will be seen that a chute 80 is provided, leading from the coin controlled mechanism to a receptacle 81 supported by a bracket 82 on the casing. When the grooves 55 come into register with the upper end of the chute 80, they pass downward into the receptacle, from which they may be removed when desired.

What is claimed as new is:—

1. In apparatus of the class described, an endless chain, wheels for supporting the chain, and around which the chain passes, with straight reaches of the chain between the wheels, a plurality of containers carried by the chain at the outer face thereof, and connections between the several containers and the chain for spacing the containers further apart from each other when passing around the wheels than when on the straight reaches of the chain and for holding them upright throughout their travel, each of said connections including links pivoted to a common connection on the container and diverging from each other toward the chain and connected therewith.

2. In apparatus of the class described, an endless chain mounted to travel over straight and curved paths, and including a plurality of containers for merchandise supported at the outer face thereof, and connections between the several containers and the chain for spacing the containers further apart from each other when traveling over the curved path than when traveling over the straight path and for holding them upright throughout their travel, each of said connections including links pivoted to the container on a common connection, and diverging toward the chain and connected therewith, and rigid guides for the chain and the containers.

3. In apparatus of the class described, an endless carrier having a plurality of containers, an electric motor for operating the carrier and a cabinet having an opening past which the containers are moved in succession, a normally open circuit for the motor, a switch for closing the same, selective mechanism to close the switch and to hold it closed a sufficient length of time to bring any selected container to the opening, a normally closed switch in the motor circuit, and means operated by the opening of the door to open said switch.

4. In apparatus of the class described, an endless carrier having a plurality of containers, an electric motor for operating the carrier and a cabinet having an opening past which the containers are moved in succession, a normally open circuit for the motor, a switch for closing the same, selective mechanism to close the switch and to hold it closed a sufficient length of time to bring any selected container to the opening, said selective mechanism comprising a roller operated by the carrier and provided with radially extending pins corresponding in number to the number of containers in a series spiral to the roller, push buttons corresponding in number to the pins and adapted to be moved into the path of movement thereof, a cam plate having openings through which the push buttons extend, the push buttons having cam surfaces to move the plate in one direction when said buttons are pressed toward the roller, and having means interengaging with the cam plate to hold the push buttons in inward position, a spring urging the plate in the opposite direction, and connections between the plate and the switch.

Signed at New York city in the county of New York and State of New York this 30th day of August A. D. 1929.

HARRY MILLER.