(No Model.)

H. A. VOELKNER.

MEDICAL INDUCTION COIL.

No. 456,746. Patented July 28, 1891.

Fig. 1.

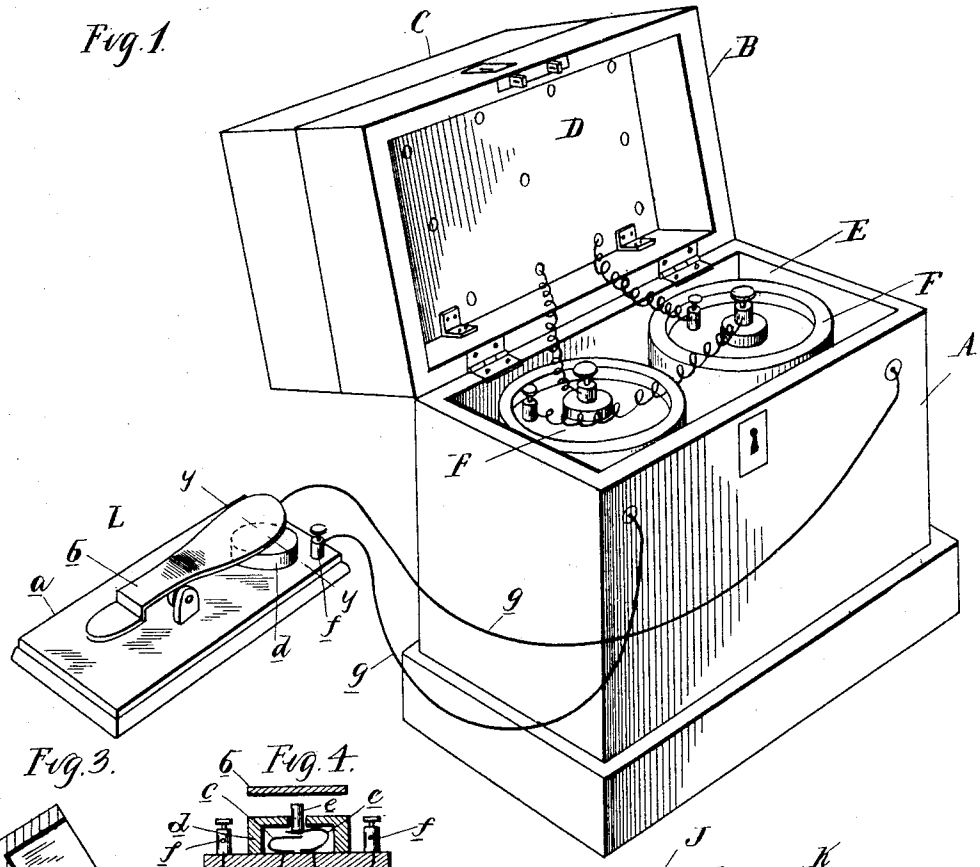

Fig. 3.

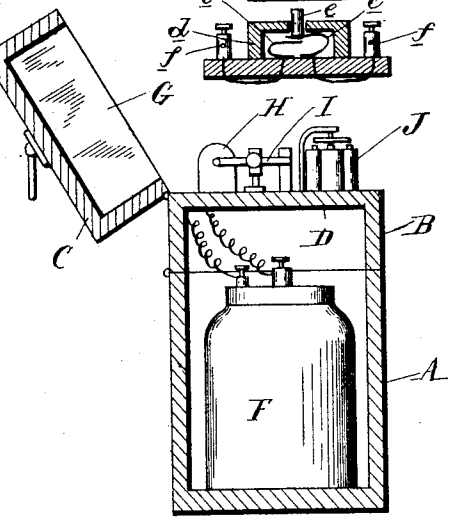

Fig. 4.

Fig. 2.

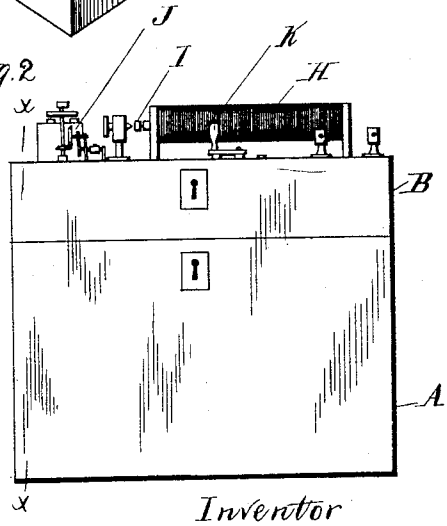

Witnesses.
A. L. Stabbe
M. B. Dogherty

Inventor
Henry A. Voelkner
By Thos. G. Sprague & Son
Atty.

THE NORRIS PETERS CO., PHOTO-LITHO., WASHINGTON, D. C.

UNITED STATES PATENT OFFICE.

HENRY A. VOELKNER, OF DETROIT, MICHIGAN.

MEDICAL INDUCTION-COIL.

SPECIFICATION forming part of Letters Patent No. 456,746, dated July 28, 1891.

Application filed January 28, 1891. Serial No. 379,456. (No model.)

To all whom it may concern:

Be it known that I, HENRY A. VOELKNER, a citizen of the United States, residing at Detroit, in the county of Wayne and State of Michigan, have invented certain new and useful Improvements in Medical Batteries, of which the following is a specification, reference being had therein to the accompanying drawings.

This invention relates to new and useful improvements in medical batteries. Medical batteries, which are largely used in the treatment of a certain class of diseases, are usually constructed as follows: Within an outer casing, generally made of two hinged sections, are placed the operating parts, the lower section forming a compartment in which the battery-cells are placed, this compartment being provided with a cover or lid which divides it from the rest of the box, and which at the same time forms a support for the induction-coil or other translating device. It is important that the device be so constructed that the battery-cells are in a separate compartment from the rest of the apparatus, in order to avoid corrosion of the parts from the vapor or moisture arising from the cells. At the same time it is frequently necessary to have access to the battery-cells, which in most batteries, on account of the connections between them and the translating device, is difficult to accomplish. It is also important that the battery be adapted for the production of different currents, varying in character and intensity, for the treatment of different diseases. Thus most batteries are provided, in addition to the induction-coil with its movable core and vibrator or rapid current-breaker, with a second current-breaker of less rapidity, the latter being intended for the production of a very intense current, especially adapted to the treatment of rheumatism and other like complaints, where a succession of shocks are more beneficial than an even current. On the other hand, for the treatment of nervous disorders it is important to have a very even current, such as given by the use of a rapid vibrator. It is evident that in the treatment of various complicated forms of disease it frequently becomes necessary to give the patient both forms of current.

My invention has for its object the overcoming of certain difficulties common to batteries heretofore in use, as well as rendering it more efficacious in the treatment of diseases where it is necessary to use both an intense and even current; and to this end my invention consists in the peculiar construction, arrangement, and combination of parts, all as more fully hereinafter described. These conductors are preferably connected in the direct circuit with the primary circuit of the induction-coil.

In the drawings, Figure 1 is a perspective view of my improved medical battery, with the lower compartment open. Fig. 2 is a front elevation of the same, with the upper compartment open. Fig. 3 is a vertical cross-section on line $x\,x$ in Fig. 2. Fig. 4 is a cross-section on line $y\,y$, Fig. 1.

The outer casing of my battery is formed in three hinged sections A, B, and C, the middle section B being provided with the division-board or partition D, which divides the interior of the box into two compartments independently accessible. In the lower compartment E, I place the battery-cells F, and in the upper compartment G is placed the translating device. This translating device consists of the induction-coil H, vibrator I, slow current-breaker J, switch K, &c. Suitable connections are made between the battery-cells and the induction-coil, and by means of the switch K either the rapid vibrator or the slow current-breaker may be independently placed in the primary circuit, or both may be placed therein in series. Each section of the box is provided with a suitable lock or catch, and upon the cover is placed a handle, by means of which the device may be readily carried from place to place.

It will be seen that with the construction I have described I gain several advantages over other forms, first, in rendering both compartments of the box independently accessible. I do away with the trouble that frequently arises with other batteries when it is necessary to have access to the cells for the purpose of replacing the solution or the zincs, or effecting any adjustment that may be required and which may only be accomplished by lifting the lid, which, on account of the

connecting-wires between it and the cells, renders the operation difficult; second, by placing both the rapid and the slow current-breakers in series in the primary circuit I produce a current differing from that given by either of the current-breakers when used independently, combining all the advantages of both.

In Figures 1 and 4 I show an attachment to my battery which is frequently of great service in the practical application of my device, and by means of which the operator may instantly throw the current on or off. L is a foot-key consisting of the base *a*, foot-lever *b*, pivotally connected to standards on the box at a point opposite the instep, contact-springs *c* underneath the toe of the foot-lever and inclosed in a suitable casing *d*, and pin *e*, resting on the upper spring *c* and extending through an aperture in the casing into proximity to the lever *b*. *f* are binding-posts connected, respectively, to the contact-springs *c*, and *g* are conductors by which the foot-key is connected with the battery. This attachment will be especially useful in dentistry, where the operator may have both hands engaged in holding the electrodes—as, for example, in the killing of a nerve—and yet may wish to throw on the current instantly and as instantly throw it off again when the operation is complete, all of which may be accomplished by a slight movement of the foot.

What I claim as my invention is—

1. In a medical battery, the combination, with the induction-coil, of two current-breakers of different rapidity arranged in series in the primary circuit, substantially as described.

2. In a medical battery, the combination, with the induction-coil, of two current-breakers of different rapidity, and a switch by means of which either current-breaker may be placed independently or both in series in the primary circuit, substantially as described.

In testimony whereof I affix my signature in presence of two witnesses.

HENRY A. VOELKNER.

Witnesses:

M. B. O'DOGHERTY,

N. L. LINDOP.