F. MAGIDSON.

TICKET DISPENSING MACHINE.

APPLICATION FILED AUG. 13, 1913.

1,098,913.

Patented June 2, 1914.

3 SHEETS—SHEET 1.

FIG. 1.

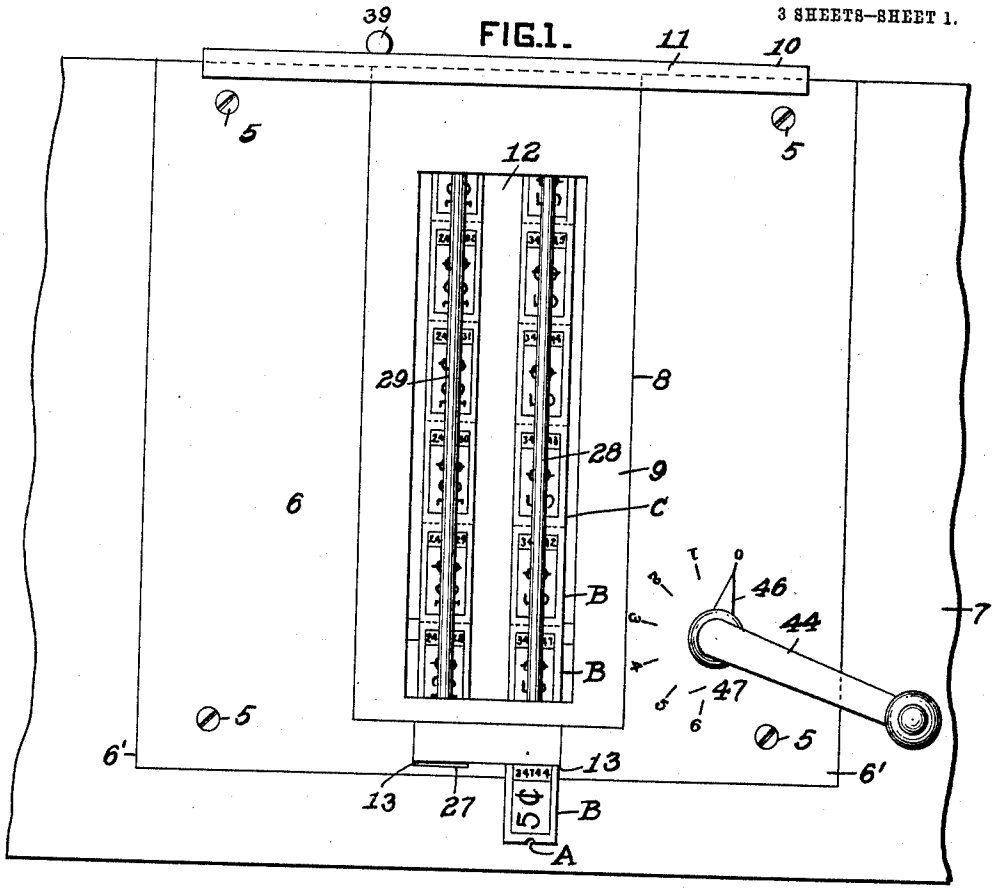

FIG. 2.

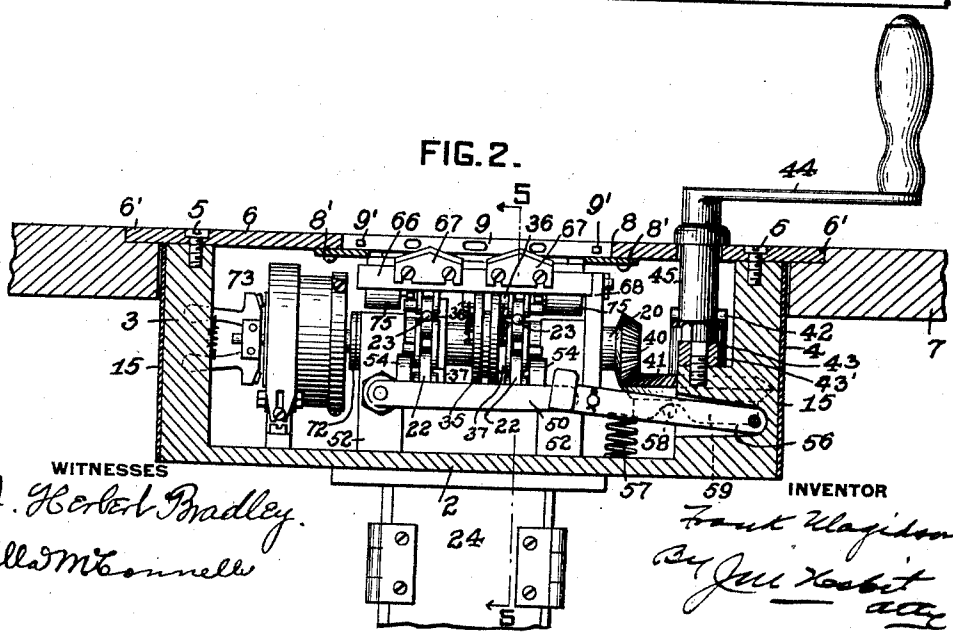

WITNESSES

J. Herbert Bradley.

Ella McConnell

INVENTOR

Frank Magidson

By Jno Hobit

atty

COLUMBIA PLANOGRAPH CO., WASHINGTON, D. C.

F. MAGIDSON.

TICKET DISPENSING MACHINE.

APPLICATION FILED AUG. 13, 1913.

1,098,913.

Patented June 2, 1914.

3 SHEETS—SHEET 2.

FIG. 3.

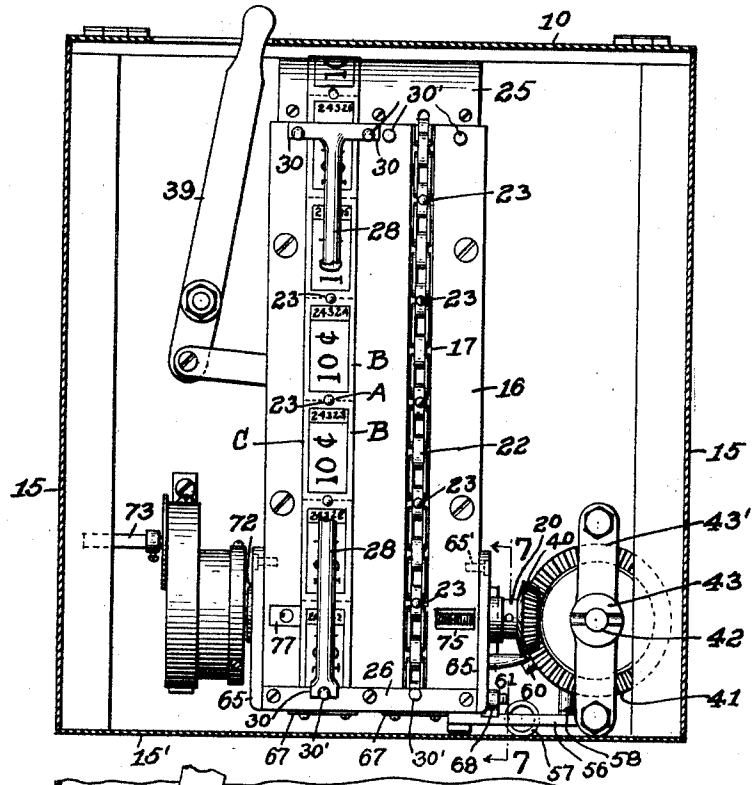

FIG. 4.

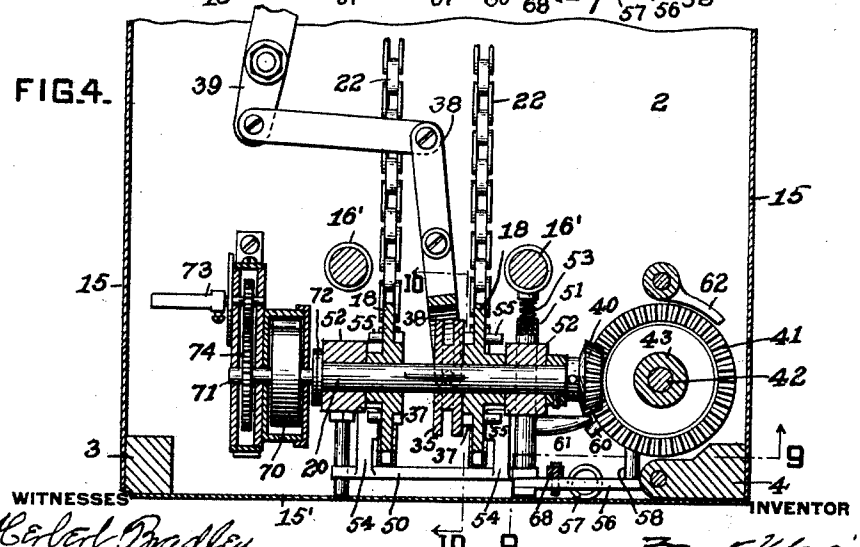

J. Herbert Bradley.

Ella McConnell

Frank Magidson

By Jas. Herbert

Atty.

COLUMBIA PLANOGRAPH CO., WASHINGTON, D. C.

F. MAGIDSON.

TICKET DISPENSING MACHINE.

APPLICATION FILED AUG. 13, 1913.

1,098,913. Patented June 2, 1914.

3 SHEETS—SHEET 3.

FIG. 5.

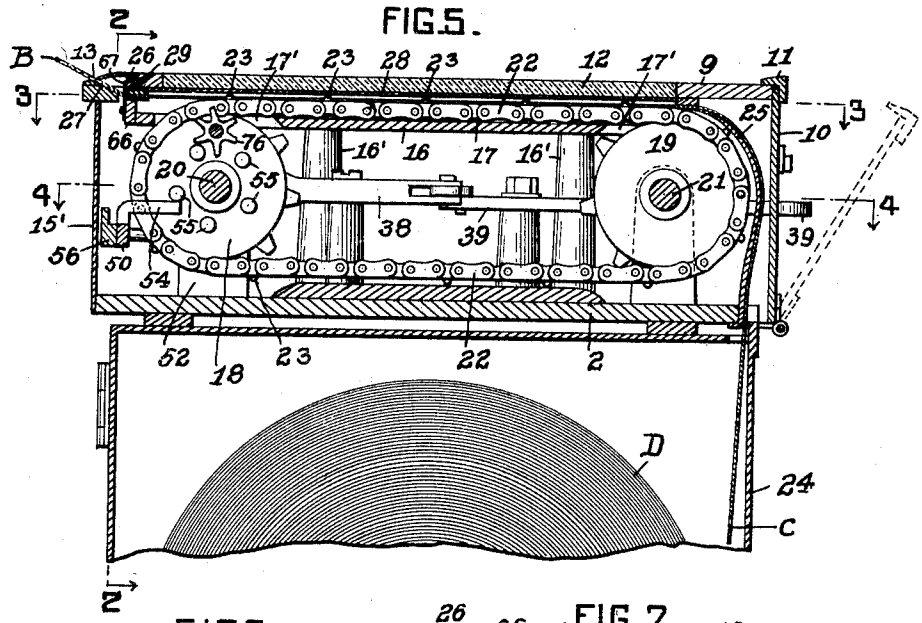

FIG. 6.

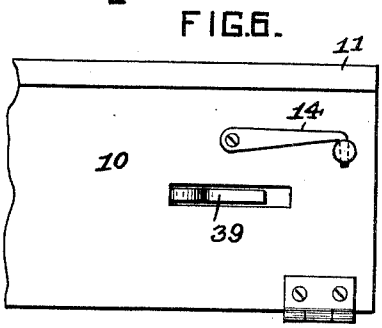

FIG. 7.

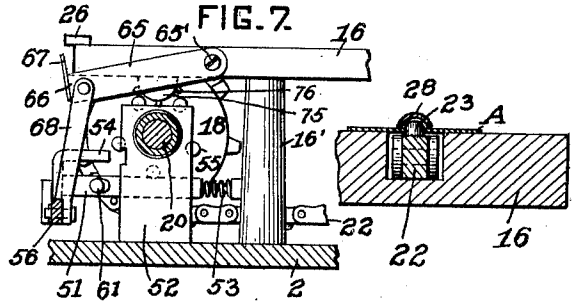

FIG. 9.

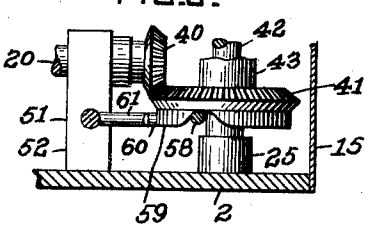

FIG. 10.

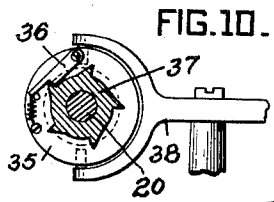

FIG. 8.

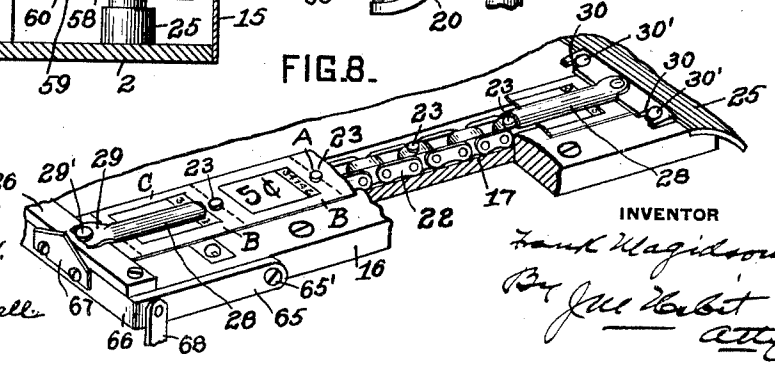

WITNESSES

J. Herbert Bradley.

Ella McConnell

INVENTOR

Frank Magidson

By J. M. Hobit

Atty.

COLUMBIA PLANOGRAPH CO., WASHINGTON, D. C.

UNITED STATES PATENT OFFICE.

FRANK MAGIDSON, OF PITTSBURGH, PENNSYLVANIA, ASSIGNOR OF ONE-FOURTH TO MAX SCHAFFEL, OF BRADDOCK, PENNSYLVANIA.

TICKET-DISPENSING MACHINE.

1,098,913. Specification of Letters Patent. Patented June 2, 1914.

Application filed August 13, 1913. Serial No. 784,495.

To all whom it may concern:

Be it known that I, FRANK MAGIDSON, a citizen of the United States, and resident of Pittsburgh, in the county of Allegheny and State of Pennsylvania, have invented certain new and useful Improvements in Ticket-Dispensing Machines, of which the following is a specification.

The primary object of this invention is to provide a simple, accurate, and highly efficient machine for dispensing strip tickets at places of amusement, traction stations, soda fountains, etc., the machine being preferably constructed to deliver one or a plurality of tickets at each operation, and thereby greatly facilitating the work over the present general method of dispensing one ticket at a time regardless of the number wanted by a single purchaser.

A further object is to provide for dispensing tickets from a plurality of strips, with operating mechanism adapted thereto interchangeably, whereby tickets differing in price may be handled by the same machine, or whereby when tickets of only one price are sold, a fresh spool may always be in reserve and ready for use, avoiding delay at rush hours incident to inserting a new spool.

The improved mechanism is adapted to be embodied in the counter or window shelf of a ticket booth, the operating handle projecting from the top surface and within convenient reach. The handle is also readily removable, and if removed, surreptitious delivery of tickets is rendered impossible.

The novel mechanism embodying the foregoing and many other features characteristic of the improved machine, are fully described and claimed herein, and illustrated by the accompanying drawings, wherein:—

Figure 1 is a top plan view of the improved machine, showing the operating handle at the completion of its return movement and ready for another operation. Fig. 2 is a sectional elevation taken on line 2—2 of Fig. 5. Figs. 3 and 4 are sectional plans taken on lines 3—3 and 4—4, respectively, of Fig. 5. Fig. 5 is a vertical longitudinal section taken on line 5—5 of Fig. 2. Fig. 6 is a rear elevation of a portion of the machine casing. Fig. 7 is a sectional detail taken on line 7—7 of Fig. 3. Fig. 8 is a detail perspective, partly in section, of the ticket strip supporting table and actuating chain. Figs. 9 and 10 are sectional elevations of portions of the mechanism taken on lines 9—9 and 10—10 respectively.

Referring to the drawing, 2 designates a rectangular base plate which forms the bottom of a box-like casing in which the mechanism is inclosed, and rising from three corners thereof are posts 3 of like form, and from the fourth corner a post 4. Secured to the upper ends of these posts by screws 5 is the casing top plate 6 which is preferably extended at opposite sides at 6′ for supporting the mechanism on a counter or shelf 7 at the window of a ticket selling booth or office. Top plate 6 is formed with an opening 8 which extends forwardly from its rear end, said opening being closed by a plate 9 which rests on strips 8′ secured to the under side of plate 6. The rear wall 10 of the casing is hinged to turn outwardly as shown in dotted lines in Fig. 5, and at the top edge of said hinged end is the angular lip 11 which closes the rear end of opening 8 and overhangs plate 9 and confines the latter in place. Interfitting projections and recesses 9′ on plate 9 and in the front end wall of opening 8 secure the front end of the plate against upward movement without, however, interfering with sliding the plate in a backward direction when casing end 10 is opened. The ticket strips may be observed through a glass panel 12 in plate 9 as they are fed forward progressively to the delivering slots 13, in manner presently to be described. Casing end 10 may be held closed by hook latches 14. The opposite sides of the casing may be closed by plates 15 and the front by a plate 15′, said plates being secured to posts 3 and 4 as shown.

Beneath top plate 6 and partially exposed through glass panel 12 is a table 16 supported on posts 16′ and having its top formed with the longitudinal chain confining and guiding grooves 17, opposite ends of the grooves being cut through at 17′ so that the front and rear sprocket wheels 18 and 19, respectively, may project thereinto. Wheels 18 are revoluble on shaft 20 and wheels 19 are mounted on shaft 21. A sprocket chain 22 extends around each set of wheels 18—19 with the upper course of the chain supported in one of grooves 17, the latter being slightly deeper than the thickness of the chain. Projecting from the chain at uniform intervals are pins 23 which enter per-

forations A between adjacent tickets B of a ticket strip C, the latter being wider than groove 17 and moved by the chain over the smooth top surface of table 16. The ticket strip is drawn from a spool or coil D which may be arranged in a casing 24, the strips passing upwardly over curved guide 25 into the rear end of groove 17 where each perforation is engaged by a chain pin 23, and as the chain is operated, in manner presently to be described, the tickets are passed beneath a bar 26 at the front end of groove 17 and upwardly and outwardly through delivery slot 27.

The ticket strip is held to the top surface of the table and in engagement with chain pins 23 by a channeled rod 28, upwardly arched in cross-section to embrace said pins, the front end of the rod being notched at 29 to engage a headed pin 29′ on bar 26, and at its rear end carrying the notched cross piece 30 which engages pins 30′ at the rear end of table 16. The front end 29 of the rod is first entered beneath pin 29′ and the resilient rod is sprung slightly to engage cross piece 30 with pins 31, the result being that the rod is securely held but without unduly binding the ticket strip. Access to rod 28 may be had by removing plate 9 for the purpose of starting a new spool, etc.

As here shown, the machine embodies two ticket delivering mechanisms to which the operating mechanism, presently to be described, is interchangeably adapted, whereby different priced tickets may be dispensed by one and the same machine, or if tickets of only one price are being sold, a fresh spool may always be ready for use, avoiding delay incident to inserting a new one. It will be understood, however, that only one delivery mechanism or more than two, may be employed without departing from the invention.

Power is derived from shaft 20 for operating one or the other of chains 22, a clutch head 35 being splined and slidable on said shaft between sprocket wheels 18, the head at either side carrying a spring pawl 36 which are adapted to engage one or the other of ratchets 37 on the adjacent faces of wheels 18. Clutch head 35 is moved toward one sprocket or the other by a clutch shifter comprising a yoke lever 38 which is connected to operating lever 39 projecting through a slot in casing end 10.

For operating shaft 20 a pinion 40 on one end thereof meshes with gear wheel 41 secured to vertical stem 42, the latter being revoluble in step bearing 43 and guide 43′ and operated by the removable crank-handle 44, the vertical socket portion 45 thereof being entered through an opening in top plate 6 and embracing stem 42, the notched lower end thereof interlocking with pin 42′ on the stem. The ticket seller may readily remove the operating handle when closing or temporarily leaving his window, and thus put the machine entirely out of commission.

The handle may be operated to deliver one or more tickets at a time, avoiding the necessity of repeated operations where a purchaser calls for more than one. As here embodied, any number up to six may be dispensed by a single operation of the handle, the number being ascertained by a pointer 46 carried by the handle and moving over the scale 47 marked on top plate 6. The arrangement is preferably such that the forward throw of the handle rotates the pawl carrying head 35 in a direction to move the active pawl 36 idly over its ratchet 37, the length of travel of the pawl depending on the number of tickets to be delivered. The reverse movement of the handle and head 35 results in the pawl imparting positive forward movement to sprocket wheel 18 and to the chain impelled thereby, the extent of such movement corresponding exactly to the total length of the ticket or tickets sold, the latter being projected through slot 27.

Mechanism is provided for locking the chain actuating sprocket wheels 18 at the completion of each ticket selling operation and for releasing the same at the beginning of each operation, the length of the delivered strip being so accurately determined by the actuating ratchet mechanism and by the locking mechanism that a perforation A between adjacent tickets is always in the plane of the front face of bar 26, with which a cutter, presently to be described, coacts when the requisite length of strip has been projected, this regardless of whether such projected portion comprises one ticket or six.

The locking mechanism consists of a horizontally movable bar 50, one end of which is secured to a rod 51 which is slidable through bearing post 52 of shaft 20. A spring 53 interposed between the inner end of rod 51 and one of posts 16′ opposes inward movement of bar 50 and when the latter is released tends to move it outward and disengage arms 54, projecting from bar 50, from pins 55 on sprocket wheels 18. Pivoted to corner post 4 is arm 56, and depression of this arm is opposed by spring 57. When said arm is raised it holds bar 50 in inward position against the pressure of spring 53 and with arms 54 in the path of pins 55, thereby locking the delivery chains against forward movement. A pin 58 on arm 56 extends beneath and engages cam 59 on the under surface of gear wheel 41, so that at the beginning of the forward movement of the operating handle arm 56 is depressed, thereby releasing bar 50 and permitting it to be moved outward into unlocked position under the pressure of spring 53. At the completion of the backward or chain operating movement of handle 44

and gear 41 a pin 60 on the latter engages arm 61 projecting from rod 51 and returns bar 50 and arms 54 into locking position and at the same time permits the spring impelled arm 56 to rise and hold said bar against outward movement. Pin 60 and arm 61 also limit the backward travel of handle 44 and gear wheel 41. The maximum forward movement is defined by stop 62 in the path of pin 60, so that in the present embodiment movement in excess of that required for six tickets is impossible. It will be understood, however, that the machine may be arranged to deliver a maximum number either less or in excess of six. The teeth of ratchet 37 are so spaced relatively to the movement of pawl 36 and the operating handle that the sprocket chain is never moved less than a ticket length and always moves in ticket length units.

The ticket severing mechanism consists of a bail-shaped frame which embraces the front end of table 16, arm 65 thereof being pivoted to the table at 65′, and the transverse bar 66 thereof adapted to bear upwardly against the table-bar 26 and project the strip severing knives 67 upwardly over the front face of bar 26 for cutting of the delivered tickets. A link 68 connects the knife-conveying frame with arm 56 so that the knives are lowered beneath the path of the tickets and are so held until at the completion of the ticket delivering operation, arm 56 is released, in manner heretofore described, when the knife carrier rises suddenly under the impetus of spring 57 and projects the active knife through the strip at a perforation A.

The backward or ticket impelling movement of handle 44 and the actuating mechanism may be accomplished by the operator, or by means of a motor, for example, a spring coil 70 having its spindle 71 coupled to the end of shaft 20 at 72, the spring being moved up or contracted by the rotation of the shaft resulting from the forward movement of the handle and automatically actuating the mechanism when the handle is released. Sudden movement and resulting slack may be avoided by gearing a rotary governor 73 to spindle 71, as indicated at 74. As no novelty is claimed herein for the motor coil and governor illustration and description thereof in detail is unnecessary.

An adding register 75 may be provided for each delivering mechanism for indicating the number of tickets sold, the same being located in an opening in table 16 with its actuating wheel 76 in the path of locking pins 55 on sprocket wheel 18. The registers are preferably located beneath top plate 9. If desired, the dial of each register may be obscured by a key locked plate 77, so that if the proprietor desires he may keep the ticket seller in ignorance of the number of tickets dispensed. As pins 55 bear absolutely accurate relation to the number of tickets dispensed, the register operates with mechanical precision.

I claim:—

1. In a ticket dispensing machine, the combination of an endless strip-advancing chain, projections on the chain spaced equal distances apart and adapted to engage correspondingly spaced apertures in a ticket strip, carrier moving means, a table over which the strip is moved, the table formed with a depression through which the chain moves and from which the strip engaging devices project, a strip holding rod positioned over and adapted to engage the strip, and means for detachably securing the ends of the rod to the table.

2. In a ticket dispensing machine, the combination of strip-advancing mechanism, a handle movable a unit distance and multiples of such distance, and means operatively connecting the handle and strip-advancing mechanism for moving the latter a distance corresponding to the unit distance or multiples of such unit distances traveled by the handle.

3. In a ticket dispensing machine, the combination of strip-advancing mechanism, a handle movable idly from starting position to strip advancing position a unit distance and multiples of such distance, mechanism operatively connecting the strip-advancing mechanism and handle during the return movement of the latter to starting position so as to move said mechanism a unit distance or a multiple of unit distances corresponding to the first distance traveled by the handle.

4. In a ticket dispensing machine, the combination of a frame having a counter-like top, a handle rotatable in the top about a vertical axis, a pointer movable with the handle and coöperating with a fixed scale, and ticket strip-advancing mechanism beneath the counter-like top and operatively connected to the handle and adapted to be moved by the latter a distance sufficient to project the number of tickets indicated upon the fixed scale by the pointer.

5. In a ticket despensing machine, the combination of ticket-advancing mechanism, a part adapted to rotate with said mechanism, equally spaced stops on said part, a locking device for engaging one or another of said stops, a spring for moving the locking device out of stop engaging position, and actuating means for the strip-advancing mechanism adapted to operatively engage the locking device for moving it into locking position.

6. In a ticket dispensing machine, the combination of strip-advancing mechanism, a part adapted to rotate with said mechanism, equally spaced stops on said rotating

part, a sliding lock for engaging one or another of the stops, actuated mechanism for the strip-advancing mechanism, a device actuated by the operating mechanism for releasing the lock and a spring for moving the released lock out of locking position, and means actuated by the operating mechanism for restoring the lock to holding position.

7. In a ticket dispensing machine, the combination of an endless strip-advancing chain, supporting wheels for the chain, a shaft on which one of the wheels is loosely mounted, a ratchet carried by said wheel, a pawl rotatable with the shaft and adapted to operatively engage the ratchet, and means for rotating the pawl carrying shaft in reverse directions.

8. In a ticket dispensing machine, the combination of an endless strip-advancing chain, chain supporting wheels, equally spaced stops projecting from one of the wheels, a lock for engaging one or another of the stops, means for rotating the stop carrying wheel, a handle operatively connected to said wheel, and means operated by the handle for moving the lock into and out of locking position.

9. In a ticket dispensing machine, the combination of a strip advancing mechanism, chain supporting wheels, a stop projecting from one of the wheels, a lock for engaging the stop, means for rotating the stop carrying wheel, a handle operatively connected to said wheel, and means operated by the handle for moving the lock into and out of locking position.

10. In a ticket dispensing machine, the combination of an endless strip-advancing chain, chain supporting wheels, an actuating shaft for one of the wheels, ratchet mechanism operatively connecting said shaft and wheel, an operating shaft geared to the wheel actuating shaft, a cam rotatable with the operating shaft, a pivoted spring-pressed arm adapted to be depressed by the cam, stops on the chain actuating wheel, a lock adapted to engage one or another of the stops, a spring for moving the lock from holding position, the lock adapted to be maintained in holding position by said pivoted arm before the latter is depressed by the cam, and means actuated by the operating shaft for moving the lock into wheel holding position in which position it is held by the said pivoted arm when the latter returns to normal position.

11. In a ticket dispensing machine, the combination of a strip advancing mechanism, chain supporting wheels, a stop projecting from one of the wheels, a lock for engaging the stop, means for rotating the stop carrying wheel, a handle operatively connected to said wheel, means operated by the handle for moving the lock into and out of locking position, a cutter, means for holding the cutter depressed, and means operated by the handle for releasing the cutter.

12. In a ticket dispensing machine, the combination of endless strip-advancing mechanism, an operating shaft movable idly from starting position, means operatively connecting said shaft and strip-advancing mechanism for actuating the latter during the return movement of the operating shaft, a spring impelled cutter normally projecting across the path of the strip, means actuated by the operating shaft during its forward movement for retracting the cutter, means for holding the cutter retracted, and means actuated by the operating shaft as it completes its return movement for releasing the cutter.

13. In a ticket dispensing machine, the combination of endless parallel strip-advancing chains, supporting wheels for the chains, a shaft on which the corresponding wheels of the chains are rotatable, means movable on the shaft between said wheels for operatively connecting either wheel to the shaft, and shaft actuating means.

In testimony whereof I affix my signature in presence of two witnesses.

FRANK MAGIDSON.

Witnesses:
J. M. NESBIT,
F. E. GAITHER.

Copies of this patent may be obtained for five cents each, by addressing the "Commissioner of Patents, Washington, D. C."