Dec. 15, 1925. 1,565,727

H. M. FRIENDLY

TELEPHONE SYSTEM

Original Filed March 14, 1917 2 Sheets-Sheet 1

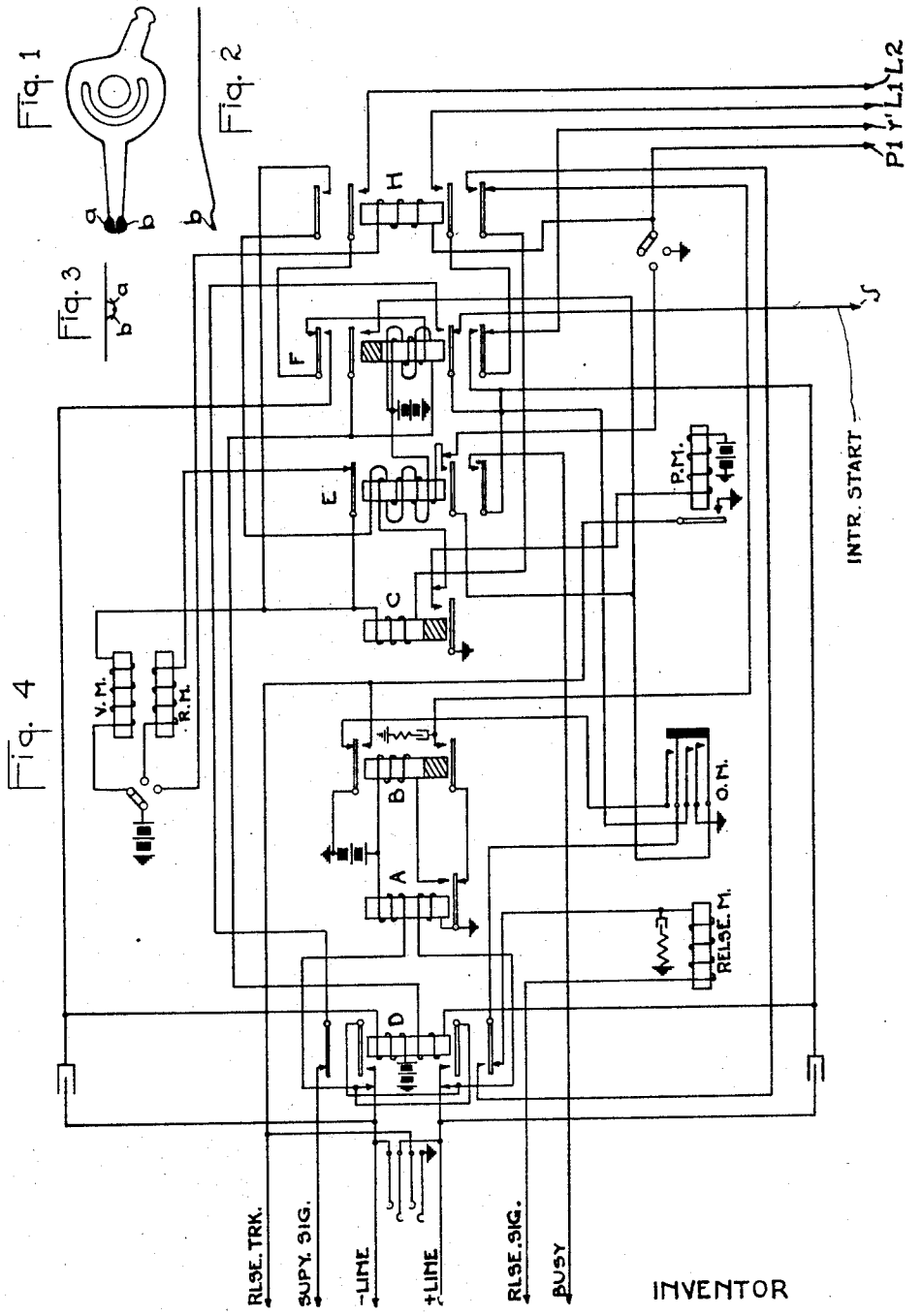

INVENTOR

Herbert M. Friendly

Dec. 15, 1925. 1,565,727

H. M. FRIENDLY

TELEPHONE SYSTEM

Original Filed March 14, 1917 2 Sheets-Sheet 2

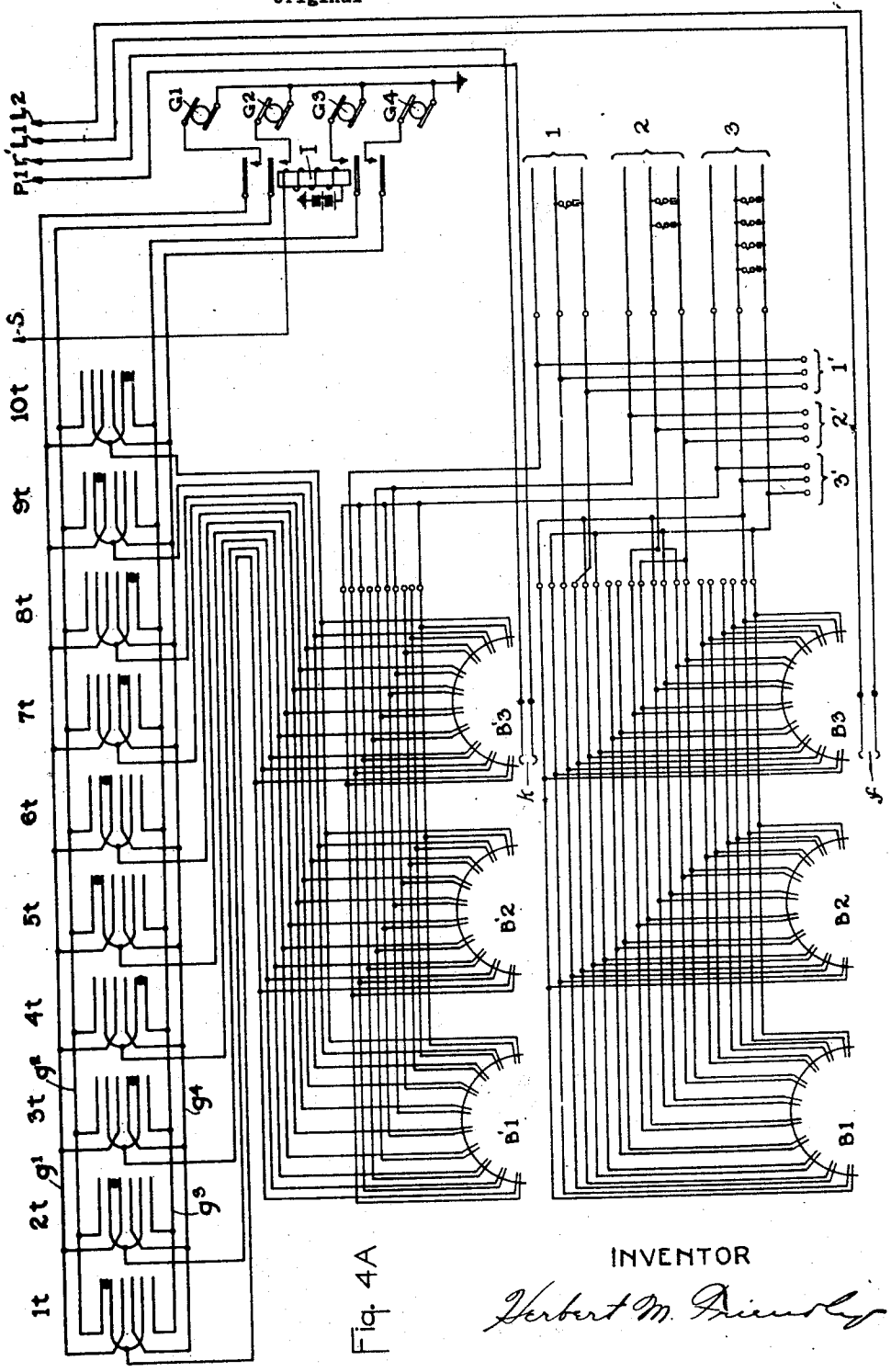

Fig. 4A

INVENTOR

Herbert M. Friendly

Patented Dec. 15, 1925. 1,565,727

UNITED STATES PATENT OFFICE.

HERBERT M. FRIENDLY, OF CHICAGO, ILLINOIS.

TELEPHONE SYSTEM.

Application filed March 14, 1917, Serial No. 154,790. Renewed December 19, 1924.

To all whom it may concern:

Be it known that I, HERBERT M. FRIENDLY, a resident of Chicago, Cook County, Illinois, have invented certain new and useful Improvements in Telephone Systems, of which the following is a specification.

My invention relates to what are generally known as full automatic telephone systems, semi-automatic telephone systems and variations of such systems, including manual telephone systems.

An object of my invention is to render more flexible and effective the involved equipments and to enable both central office and outside construction to be conserved to a greater degree than practicable using methods heretofore in practice or known so far as I am aware. Other objects of my invention and the invention itself will be clear from the following description thereof.

In the accompanying drawings:—

Fig. 1 shows a plan view of a common form of wiper blade with insulated members *a* and *b*.

Fig. 2 shows a side view of Fig. 1.

Fig. 3 shows an end view of Fig. 1.

Fig. 4 is a schematic layout of a portion of a common form of connector switch, as used in automatic operation with modifications as relates to the application of signaling current as will hereafter be adverted to.

Fig. 4^{A}, which attaches below Fig. 4, is a diagrammatic layout of a portion of connector switch shown in Fig. 4, together with diagrammatic layout of connector-blank wiring and signaling current supply.

As an illustration of the application of my invention I shall set forth herein a typical connector embodying same.

By my novel arrangement I gain structural and operative advantages as will hereinafter be discussed.

For the purpose of this illustration I have chosen the well known "two-wire" automatic system of the Strowger type as extensively used and now furnished by the Automatic Electric Company of Chicago, Illinois, into which the present invention has been embodied. I also refer to the organization of equipments set forth in my application for U. S. Letters Patent, Serial No. 138,149, issued as Patent No. 1,561,710, Nov. 17, 1925, to which my present invention is readily applicable.

Further, by my novel arrangement of equipments I am enabled to allow a plurality of signaling current frequencies or characters of signaling current to be impressed upon any accessible line or branch of a line through any single connector switch, the character of current to be so impressed to be predetermined. That is, say four characters of signaling current are available in an exchange; if desired, any line or branch of any line may be readily prearranged to have the desired character of current applied to it for signaling purposes when seized by a connector.

It will be noted that through my novel arrangement the character of signal current is not determined by a prearranged condition of the connector or connector group, but rather by a condition set up in any connector seizing a line through the agency of signal current supply prearranged in connection with each line accessible to the connector or connectors.

Referring to Fig. 4^{A}, G^{1}, G^{2}, G^{3} and G^{4} are sources of signaling current, which for the purpose of this illustration may be referred to as 16 cycle, 33 cycle, 50 cycle and 66 cycle respectively. This current supply may be continuous, or it may be intermittent, or it may be what is commonly called "code."

Relay I is a so-called "interrupter start" relay, which is energized over wire S, contact of relay F, thence to ground through off-normal contacts. However, in place of supplying current of one character to the lower contact of relay F over conductor r', as is a common practice, I connect the said lower contact over wire r' to the right hand contact blade of wiper *k*. From wiper *k* connection is made with bank contacts that are energized with prearranged current character.

Wipers *k* are made up of two contact blades, mounted on same shaft with the two line contact blades *f*. These are what are generally known as bank wipers and operate in response to the vertical, rotary and release magnets of the connector mechanism shown in Fig. 4.

Wipers *f* have access by vertical and horizontal movements to the lines or conductors leading out. Wipers *k*, which are similar to wipers *f*, engage "private" contacts and signaling current contacts that are companion to the line contacts.

In the illustration one level of each of three sets of connector banks are shown. Any number of banks may be so connected together. As will be noted, the private and signal current contacts and the line contacts are each shown in multiple relation. The connector switch and companion banks are of the well known form, the switch having a shaft controlling mechanism and the banks made up of levels wherein line wires reach contacts as shown in levels of the respective banks, B^1, B^2 and B^3, where lines are shown disposed in multiple relation.

Companion to said levels to which lines are connected, are corresponding auxiliary bank levels consisting of contacts to which lead companion private wires. These latter levels are shown as the left hand contact of each group of two in levels B'^1, B'^2 and B'^3.

The contact arrangement described in the two foregoing paragraphs is a common practice. However, in addition to the above, I provide an additional or auxiliary set of bank contacts corresponding to the line bank level through which signaling current is supplied the connectors, the said bank level having contacts companion to the said line and private contacts and appear as the right hand contacts of each group of two in levels B'^1, B'^2 and B'^3. The signaling current is applied to bank contacts in a prearranged manner as hereinafter described. The application of said signaling current is one of the salient features of my present invention.

1^t, 2^t, 3^t, 4^t, 5^t, 6^t, 7^t, 8^t, 9^t and 10^t are ten sets of six signaling current terminals, there being a set of six such terminals provided for each line appearing in the line banks. Thus, if, as is a common practice, one hundred lines appear in each of the multipled connector contact sets in the banks, each said bank made up of ten levels of ten sets as described; one level shown in B^1, B^2 and B^3, there would be one hundred sets of the six said signaling current terminals to companion with same.

It will be noted that each of the top terminals, or first terminal as it will be referred to, connects to a contact on interrupter start relay I over wire g^2. It will be further noted that said contact upon closing will apply signaling current from source G^2 to and along said wire g^2 to each said first terminals. Likewise each of the third terminals will in similar manner receive signaling current from source G^1. Likewise each of the fourth terminals will in similar manner receive signaling current from source G^4. Likewise each of the sixth terminals will in a similar manner receive signaling current from source G^3. It will be noted that from the said right hand terminals in B'^1, B'^2 and B'^3, hereinafter referred to as signaling current contacts, wires lead to each of the ten companion sets of six cross connecting terminals, appearing as the second and fifth terminals (connected in multiple) of said sets 1^t to 10^t inclusive.

Thus, if first and second terminals of set 1^t be connected together, as shown, upon relay I actuating, signaling current from source G^2 will be applied to said first right hand contacts of B'^1, B'^2 and B'^3. Likewise if second and third terminals of 2^t be connected, as shown, upon relay I actuating, signaling current from source G^1 will be applied to second right hand contacts of B'^1, B'^2 and B'^3. Likewise if fourth and fifth terminals of 3^t be connected, as shown, upon relay I actuating, signaling current from source G^4 will be applied to third right hand contacts of B'^1, B'^2 and B'^3. Likewise if fifth and sixth terminals of 4^t be connected, as shown, upon relay I actuating, signaling current from source G^3 will be applied to fourth right hand contacts of B'^1, B'^2 and B'^3. Likewise if first and second terminals of 5^t be connected, as shown, upon relay I actuating signaling current from source G^2 will be applied to fifth right hand contacts B'^1, B'^2 and B'^3. Likewise if second and third terminals of 6^t be connected, as shown, upon relay I actuating, signaling current from source G^1 will be applied to sixth right hand contacts of B'^1, B'^2 and B'^3. Likewise if third and fourth terminals of 7^t be connected, as shown, upon relay I actuating, signaling current from source G^4 will be applied to seventh right hand contacts of B'^1, B'^2 and B'^3. Likewise if fifth and sixth terminals of 8^t be connected, as shown, upon relay I actuating, signaling current from source G^3 will be applied to eighth right hand contacts of B'^1, B'^2 and B'^3. Likewise if second and third terminals of 9^t be connected, as shown, upon relay I actuating, signaling current from source G^1 will be applied to ninth right hand contacts of B'^1, B'^2 and B'^3. Likewise if fifth and sixth terminals of 10^t be connected, as shown, upon relay I actuating, signaling current from source G^3 will be applied to tenth right hand contacts of B'^1, B'^2 and B'^3.

It will thus be seen that the character of signaling current applied to the respective right hand contacts of B'^1, B'^2 and B'^3 will depend upon the two terminals of the said companion set of six terminals connected together, and that the said connections may be readily made and disconnected to conform to changing conditions wherein it is desired to apply changed signaling current for signal-

ing on any particular line contacts, to in turn be sent upon the connected line or line branch connected thereto, for signaling purposes.

The function of the "private" is well known. Wipers k which are mounted to move corresponding to line wipers f in addition to engaging "private" contacts with one blade have a second blade, which likewise engages the companion signaling current contacts. Wire r' is electrically connected to the latter blade. So that when shaft and wipers have rotated to a set of line contacts in the bank level and the same is non-busy and the line is seized in the well known way by "private" and line wiper blades, signaling current of the predetermined character is finding its way from right hand contact over right hand wiper blade, over r' to lower contact on relay F, contact on relay H, over wire L^1, right hand blade of wipers f out over corresponding side of line through subscriber's or subscribers' signal device or devices on line, back on companion wire of line pair to left hand line wiper blade, over wire L^2 to a contact on relay F, the subscriber being signaled in the well known way so far as path of signaling current from line contacts in the bank is concerned, but with the essential difference that in place of whole bank groups being supplied with but one character of signaling current, as many characters may be used as there are lines if need be, though the illustration contemplates but four characters, G^1, G^2, G^3 and G^4. In place of the connector switch being supplied with one character of current by direct connection, the signaling current wiper traveling with its companion line and private wipers obtains signaling current from contacts companion to line contacts. Thus my invention is particularly advantageous if a branch from a party line to a set of connector bank line contacts exists (as disclosed in my application referred to, Serial No. 138,149) and it is desired to transfer a subscriber's telephone from said line to a new line on which the previously employed character of current is used to signal a preconnected subscriber on said new line it will only be necessary to adapt a "vacant" character of signaling current applicable to the said line, change the changing subscriber's signal device to the proper kind to respond to the "vacant" character of signaling current, then connect the proper two terminals in the group of six corresponding to the connector bank number of the subscriber concerned so as to correspond to the said "vacant" character of signaling current, connect the said connector bank line contacts to the said new line cross connecting rack terminals in the manner as before connected to the line changed from.

In the illustration, party lines are shown connected into the same bank level. It is practicable to choose contacts corresponding to telephone numbers at random in widely separated connector bank groups or bank levels of the same group without relevancy to numerical arrangement, connecting them in multiple relation through the agency of a cross connecting means as set forth in my said application, Serial No. 138,149, as party lines with each said line leading to groups of subscribers' signal devices.

It is possible to make all lines accessible through bank contacts in an entire bank group signaled upon by but one character of current as heretofore, and to change any and all said lines or branch from any party line from this first character by cross-connection.

It will be observed that if the line contacts extend to "individual" lines, upon which is a single signal device, or to lines where more than one signal device is employed, but where selective signaling is not desired, it is only necessary to connect the proper two terminals in the corresponding group of six at the top of Fig. 4^A as previously described, to provide for the predetermined signaling current to be impressed on that line when the line will be seized by the connector wipers in effecting connection to the line. It is also apparent that if two or more sets of connector bank line contacts are placed in multiple relation, as a party line, each one of the respective sets of connector bank contacts can be arranged for a predetermined character of signaling current to be applied, when the connector wipers should seize the respective line contacts. Thus if connector contacts 1, 3, 6 and 10 are connected in multiple relation in the connector bank levels as shown (making a four-party line) it is possible to have four different characters as predetermined applied when connector wipers seize respective terminals in calling. The said line will have signal devices responsive to the predetermined currents to be applied, such as currents of 16, 33, 50 and 66 cycles respectively. Thus the signal devices will be the respective subscribers' station signals. Therefore, since these signals will be actuated responsive to a predetermined current character, the subscribers will be signaled selectively.

1, 2 and 3 are lines leading from connector bank terminals; line 1 being a single party or "individual" line; line 2 is a two party line and line 3 is a four party line . Terminal sets represented by 1′, 2′ and 3′ correspond to lines 1, 2 and 3 respectively and extend to line switches for incoming calling. However, the arrangement for incoming calling is not essential to carrying out my invention.

The wiper blades shown in Figs. 1, 2 and 3 are similar to well known forms and are carried on the connector shaft to engage the

bank contacts applying signaling current. The insulating portions *a* and *b* are to allow the wiper point to glide over the bank contacts with least friction or obstruction and at the same time to make it impossible to short circuit adjacent contacts while passing over them.

The descriptions in the foregoing are by way of illustration only. My invention may be widely applied and modified as an amplification or used in part only without departing from its scope.

Having thus described my invention what I claim is:—

1. In a telephone system, a connector switch, line bank contacts for the connector, ringing contacts for the connector bank corresponding to the line contacts, a plurality of sources of different signaling currents, line and signaling wipers for the connector, a connecting rack for interchangeably connecting said sources of signaling current and the bank ringing contacts, and a connection extending from the signaling wiper to a line wiper for conducting signaling current from the selected bank signaling contact to said line wiper.

2. In a telephone system, a connector switch, line bank contacts for the connector, ringing contacts for the connector bank corresponding to the line contacts, a plurality of sources of different signaling currents, line and signaling wipers for the connector, a connecting rack for interchangeably connecting said sources of signaling current and the bank ringing contacts, a connection extending from the signaling wiper to a line wiper for connecting signaling current from the selected bank signaling contact to said line wiper, and ringing interrupter means included in the signaling current path.

3. In a telephone system, a connector switch, line bank contacts for the connector, ringing terminals for the connector bank corresponding to the line contacts, a plurality of sources of different signaling currents, line and signaling wipers for the connector, a connecting rack for interchangeably connecting said sources of signaling current and the bank ringing contacts, a connection extending from the signaling wiper to a line wiper for conducting signaling current from the selected bank signaling contact to said line wiper, and a ringing interrupter interposed between the sources of signaling current and said connecting rack.

4. In a telephone system, a connector switch having line and signaling current bank contacts, sources of signaling current of different characters, an interconnecting terminal rack interposed between the sources of signaling current and the bank signaling contacts for interchangeably connecting the sources of signaling current and said signaling contacts, line and signaling current wipers for the connector, and means for conducting signaling current from a connected signaling contact through the corresponding wiper to a line wiper.

5. In a telephone system, a connector switch having line and signaling current bank contacts, sources of signaling current of different characters, an inter-connecting terminal rack interposed between the sources of signaling current and the bank signaling contacts for interchangeably connecting the sources of signaling current and said signaling contacts, line and signaling current wipers for the connector, means for conducting signaling current from a connected signaling contact through the corresponding wiper to a line wiper, and a ringing interrupted relay controlled from the connector and having interrupter contacts included in said signaling current conducting means.

6. In a telephone system, a connector switch having line and signaling current bank contacts, sources of signaling current of different characters, an interconnecting terminal rack interposed between the sources of current and signaling contacts for interchangeably connecting them, and a interrupter relay common to said sources of current and interposed between said sources and the interconnecting rack.

7. In a telephone system, a connector switch, a plurality of levels of bank contact sets for the connector, each contact set including line and ringing contacts, a plurality of sources of different signaling currents, ringing and signaling wipers for the connector, a connecting rack for interchangeably connecting said sources of signaling current and the bank ringing contacts so that each ringing contact is individually connected to one of said sources, and a connection extending from the signaling wiper to a line wiper for conducting signaling current from the selected bank signaling contact to the corresponding line contact through the line wiper.

8. In a telephone system, a connector switch having sets of bank terminals each comprising line contacts and a corresponding ringing contact, a plurality of sources of different signaling currents, line and signaling wipers for the connector, a connecting rack interposed between said bank ringing contacts and sources of signaling current, said connnecting rack including a contact terminal for each bank ringing contact and individually connected thereto, and a plurality of associated contacts each one of which is connected to a separate source of said signaling current whereby each bank line contact is interchangeably connectable with said sources of signaling current.

9. In a telephone system, a line, a connector switch, line bank terminals for the connector, branches of the line extending to a plurality of the said terminals, a plurality of sources of signaling current, means for impressing one of said sources of signaling current upon the line dependent upon what line branch bank terminals are seized by the connector, and a connecting rack interchangeably connecting said sources of signaling current and the current impressing means.

10. In a telephone system, a line, a plurality of connector switches, line bank terminals accessible to the connectors, branches of the line extending to a plurality of the said terminals, a plurality of sources of signaling current, means for impressing one of said sources of signaling current upon the line dependent upon what line branch bank terminal is seized by a connector, and a connecting rack for interchangeably connecting said sources of signaling current and the current impressing means.

11. In a telephone system, a line, a plurality of connector switches, line bank terminals accessible to the connectors, branches of the line extending to a plurality of the said terminals, a plurality of sources of signaling current, means controlled from the connector for impressing one of said sources of signaling current upon the line dependent upon what line branch bank terminal is seized by a connector, and a connecting rack for interchangeably connecting said sources of signaling current and the current impressing means.

12. In a telephone system, a line, a plurality of connector switches, line bank terminals accessible to the connectors, branches of the line extending to a plurality of the said terminals, a plurality of sources of signaling current, signal devices on the line, selectively responsive to the said sources of signaling current, means controlled from the connector for impressing one of said sources of signaling current upon the line dependent upon what line branch terminal is seized by a connector, and a connecting rack for interchangeably connecting said sources of signaling current and the current impressing means.

13. In a telephone system, a party telephone line, a plurality of sources of ringing current, a common ringing relay having a plurality of different characteristic ringing paths including said sources of current extending therefrom each for selectively signaling one of the parties on the line, a connector switch, means including the connector for operatively correlating a said ringing path with the line, and cross connecting means for interchangeably connecting said sources of ringing current in the ringing paths.

14. In a telephone system, party telephone lines, connector switches having line terminals, branches extending from each party line to appropriate line terminals of the connectors corresponding to the telephone numbers of the telephones on the lines, selective ringing currents, means for applying a ringing current to a selected line corresponding to the line terminal seized to ring the desired telephone on the line, and cross connecting means for varying the relation between the line terminals and ringing currents.

15. In a telephone system, a connector switch having line and signaling current bank contacts, sources of signaling current of different characters, an interconnecting terminal rack interposed between the sources of signaling current and the bank signaling contacts for interchangeably connecting the sources of signaling current and said signaling contacts, line and signaling current wipers for the connector respectively cooperative with corresponding bank contacts coincidently, and means for conducting signaling current from a connected signaling contact through the corresponding connected wiper to a line bank terminal then engaged by a said line wiper.

16. In a telephone system, party telephone lines, a connector switch having line terminals, branches extending from each party line to appropriate line terminals of the connector corresponding to the telephone numbers of the telephones on the lines, selective ringing currents, means for applying a ringing current to a selected line corresponding to the line terminal seized to ring the desired telephone on the line, and cross connecting means for varying the relation between the line terminals and ringing currents.

17. In a telephone system, a line, a connector switch, line bank terminals accessible to the connector, branches of the line extending to a plurality of the said terminals, a plurality of sources of signaling current, signal devices on the line selectively responsive to the said sources of signaling current, means controlled from the connector for impressing one of said sources of signaling current upon the line dependent upon what line branch terminal is seized by the connector, and a connecting rack for interchangeably connecting said sources of signaling current and the current impressing means.

Signed by me at Indianapolis, County of Marion and State of Indiana, this 10th day of March, 1917.

HERBERT M. FRIENDLY.