July 2, 1929. K. BERGL 1,719,163

SURGICAL SPRAY

Filed Jan. 8, 1927

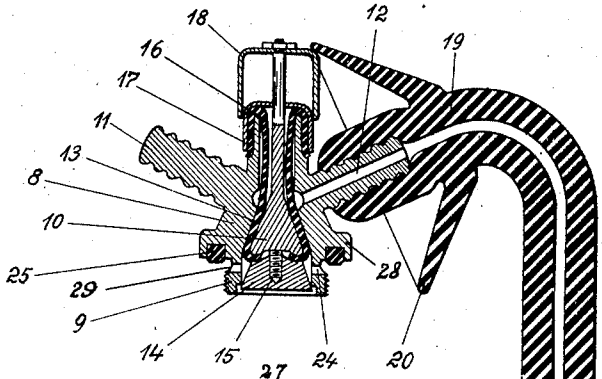

Fig. 3.

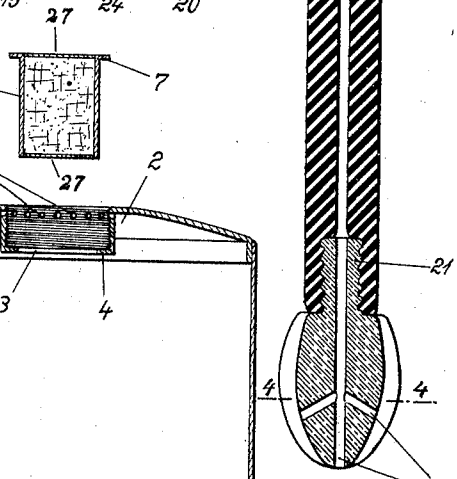

Fig. 2.

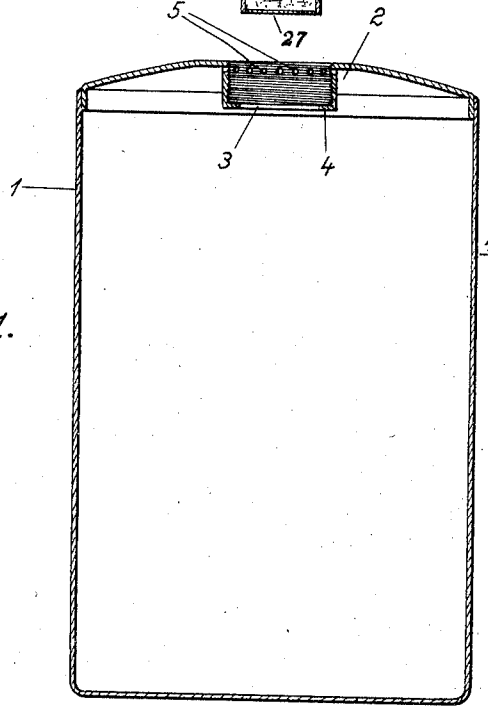

Fig. 1.

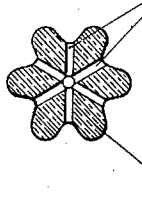

Fig. 4.

Inventor

Klemens Bergl

by Franz Reichold

Attorney.

Patented July 2, 1929. 1,719,163

UNITED STATES PATENT OFFICE.

KLEMENS BERGL, OF BERLIN, GERMANY, ASSIGNOR TO THE FIRM MAX GOTTLIEB, OF BERLIN, GERMANY.

SURGICAL SPRAY.

Application filed January 8, 1927, Serial No. 159,850, and in Germany January 30, 1926.

My invention relates to improvements in surgical sprays, and more particularly in sprays of the class in which the liquid to be directed upon a part of the body is confined within a receptacle and delivered by means of pressure exerted thereon. The object of the improvements is to provide a spray of this class in which the said receptacle is comparatively small, and in which valves controlling the supply of pressure fluid to the liquid are dispensed with, and with these objects in view my invention consists in producing the pressure within the receptacle itself from suitable chemicals so that a chamber containing a pressure fluid is dispensed with.

For the purpose of explaining the invention an example embodying the same has been shown in the accompanying drawing in which the same reference characters have been used in all the views to indicate corresponding parts. In said drawing,

Fig. 1, is a sectional elevation showing the receptacle containing the liquid,

Fig. 2, is a sectional elevation showing the container for the chemical or chemicals adapted to produce the pressure gas,

Fig. 3, is a sectional elevation showing the head to be fixed to the receptacle shown in Fig. 1, and

Fig. 4, is a sectional view taken on the line 4—4 of Fig. 3.

In the example shown in the figures, the apparatus comprises a receptacle 1 which is preferably made from aluminum and has a capacity of say ¼ liter, the receptacle having preferably a flat-oval cross-section for convenience in handling the same. At its top the receptacle carries an internally screw threaded ring or cylinder 2 for filling the liquid into the receptacle, and the said ring is formed at its bottom end with an inwardly directed flange 4 leaving a circular opening 3. Near its top end the said ring is provided about its circumference with holes 5.

The chemicals from which the pressure gas is produced are confined within a small cylindrical box 6 made from aluminum and formed at its top with a flange 7, the said box and flange fitting respectively in the circular opening 3 and on the flange 4, the box 6 when placed with its flange on the flange 4 projecting into the receptacle 1. At its top and bottom the box 6 is closed by means of thin diaphragms 27 by means of which the access of the liquid from the receptacle 1 to the chemical is prevented, the said diaphragms consisting of a suitable material such as cellophane, which can be readily broken.

The head of the spray consists of a block 8 made from a suitable material such as aluminum, which block is formed with an axial bore flaring outwardly at its bottom end, and the block is made integral with a nipple 12 the axial bore of which communicates with the axial bore of the block 8. At its bottom the head 8 is formed with an externally screw-threaded cylindrical portion 9 adapted to be screwed into the internally screw-threaded cylinder or ring 2. Above the said screw threaded portion the head is provided with a flange 28 carrying a suitable packing ring 25 adapted, when screwing the head into the ring 2, to engage the top face of the receptacle 1 and to provide an air tight closure. Below the flange the cylindrical portion 9 is formed with a neck 29 and radial bores 24 corresponding in position to the bores 5.

Within the axial bore of the head 8 there is a conical valve 10 the stem of which projects upwardly beyond the top of the head and carries a cap-shaped button 18. The valve cone 10 is provided with a jacket 13 in the form of a rubber hose fixed to the bottom face of the valve cone by means of a button 14 screwed to a pin 15. The top end of the said hose is bent downwardly and around the top part of the head 8, and it is held in position by means of a cap 17 placed thereon and having an axial bore for the passage of the valve stem therethrough.

The nipple 12 carries a flexible tube 19 preferably made from thick and elastic rubber and formed at its rear end with a conical flange 20 adapted, in case of leakage to protect the hand of the operator as against the liquid. To the outer end of the flexible tube 19 a nozzle 22 is fixed by means of a nipple 21, the said nozzle being made from a suitable material such as porcelain, vulcanite, or bakelite. Preferably the said nozzle is formed with external longitudinal ribs and grooves, and it is formed with longitudinal and transverse bores 23 for the discharge of the liquid.

Symmetrically of the nipple 12 a nipple 11 is formed on the head 8, which however is not provided with a longitudinal bore, the object of the said nipple 11 being to facilitate the handling of the head. The rubber hose 13 has the function to provide a tight seat for the valve cone, and in addition, it

has the function of a spring tending to force the valve cone on its seat. Further, by being fixed in a tight manner to the head 8, it is a substitute of a stuffing box which would otherwise be necessary for guiding the valve stem in the head.

The spray is used as follows:

The receptacle 1 is filled nearly to its top with the liquid to be directed upon the body, a box 6 containing a suitable chemical such as a mixture of tartaric acid and bicarbonate of soda is placed into the receptacle 1 through the opening 3 so that its flange 7 bears on the flange 4, and the head 8 is screwed into the ring 2. Now the receptacle 1 is perfectly closed by the packing ring 25 being pressed on the top face of the receptacle. If it is desired to use the receptacle, the valve 10 is pushed downwardly, so that the button 14 passes into the box 6 and presses the chemical confined therein into the liquid contained in the receptacle 1. After a few minutes the liquid is saturated with carbonic acid, and there is sufficient pressure within the receptacle. Now the flexible tube 19 is put on the nipple 12, the receptacle 1 is turned upside down, and the nozzle 21 is passed into the cavity of the body to be irrigated. If now the push button 18 is again depressed, the valve 10 is opened, and the liquid is forced through the bores 5, the neck 29, the bores 24, the axial bore of the head 8, the nipple 12, the tube 19, and the nozzle, the velocity and pressure of the liquid discharged through the nozzle being regulated by more or less opening the valve.

It will be understood that other chemicals may be used for producing the gas, and that in some cases one of the components is dissolved in the liquid, while the other one is confined in the box 6. Thus I am enabled to use in part liquid reagents, such for example as disinfecting wood-vinegar. When using bicarbonate of soda and tartaric acid for producing the pressure gas, I may use the tartaric acid in excess in order to impart a slight disinfecting action to the liquid. If a more active disinfecting property is desired I add specific disinfecting media to the mixture of chemicals.

By developing the gas within the receptacle 1 the liquid takes up numerous small gas bubbles, so that its active surface is materially increased, and a comparatively small amount of liquid is sufficient for producing the desired effect on the human body.

From the foregoing description it will be understood that the complete apparatus is comparatively small, because no chamber for storing the pressure fluid is needed. This is important particularly in such cases in which the apparatus is to be carried in the pocket of the physician visiting his patients. By placing the chemicals in a removable box 6 chemicals of different character may be used according to the effect aimed at by the physician. The box containing the chemicals may be put into the receptacle and the whole apparatus be prepared for use, so that it can be used at any time when needed.

While in describing the invention reference has been made to a particular example embodying the same I wish it to be understood that my invention is not limited to the construction shown in the drawing, and that various changes may be made in the general arrangement of the apparatus and the construction of its parts without departing from the invention.

I claim:

1. A surgical spray, comprising a receptacle having an opening, a head adapted to be fixed to said receptacle in position for closing said opening and having an axial bore provided with an inwardly directed valve seat, a nipple carried by said head for delivering the liquid therefrom and communicating with said axial bore, a valve and its stem within said head and adapted to be pressed inwardly from its seat, a rubber tube enclosing said valve and stem and fixed at its outer end to said head, a box for chemical matter capable when acted upon by said liquid of developing pressure gas, and means for supporting said box within said receptacle in position for being opened by said valve being pushed inwardly.

2. A surgical spray, comprising a receptacle having an opening and an internally screw threaded flange directed inwardly from said opening, said flange being formed with holes, a head adapted to be fixed to said flange in position for closing said opening and having an axial bore provided with a valve seat and transverse bores adapted to connect said axial bore with said holes, a nipple carried by said head for delivering the liquid therefrom and communicating with said axial bore, a valve within said head and adapted to be pressed inwardly from its seat, a box for chemical matter capable when acted upon by said liquid of developing pressure gas, and means for supporting said box within said receptacle in position for being opened by said valve being pushed inwardly.

3. A surgical spray, comprising a receptacle for the irrigation liquid, means connected with said receptacle for delivering the liquid therefrom, a container associated with said receptacle, and suitable solid chemical matter within said container adapted when acted upon by said liquid to develop a pressure gas.

4. A surgical spray, comprising a receptacle for the irrigation liquid, means connected with said receptacle for delivering the liquid therefrom, a container within said receptacle, and suitable solid chemical matter within said receptacle having disinfecting property and adapted when acted upon by said liquid to develop the pressure gas.

5. A surgical spray, comprising a receptacle

for the irrigation liquid, means connected with said receptacle for delivering the liquid therefrom, a box for gas developing solid chemical matter adapted to be put into said receptacle, and means operative from the outside and through the wall of said receptacle for opening said box and throwing said chemical matter out of said box and into the liquid contained within said receptacle.

6. A surgical spray, comprising a receptacle for the irrigation liquid, means connected with said receptacle for delivering the liquid therefrom, a box for solid chemical matter capable when acted upon by said liquid to develop gas, said box having removable lids in opposite parts of its wall, means for supporting said box within the receptacle, and a plunger passed through the wall of said receptacle in position for forcing said lids and the chemical matter confined within the box out of said box and into the liquid.

7. A surgical spray, comprising a receptacle for the irrigation liquid, means connected with said receptacle for delivering the liquid therefrom, said receptacle being formed with an opening surrounded by an inwardly directed flange, a box for solid chemical matter adapted when acted upon by said liquid to develop gas formed with a flange supported on said flange surrounding said opening, said box having a removable top and bottom, a member for closing said opening and having an axial bore, and a plunger guided in said bore in position for forcing said top and bottom and the solid chemical matter confined within the box into the liquid.

8. A surgical spray, comprising a receptacle for the irrigation liquid, means connected with said receptacle for delivering the liquid therefrom, a container associated with said receptacle, suitable solid chemical matter within said container adapted when acted upon by said liquid to develop the pressure gas, a flexible tube connected with said receptacle, and a nozzle carried by said tube and made from a material permitting the same to be disinfected by boiling.

In testimony whereof I hereunto affix my signature.

DR. KLEMENS BERGL.